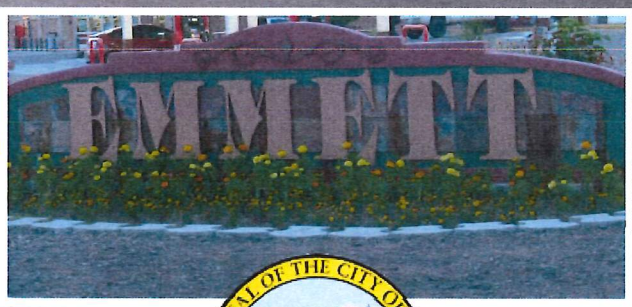

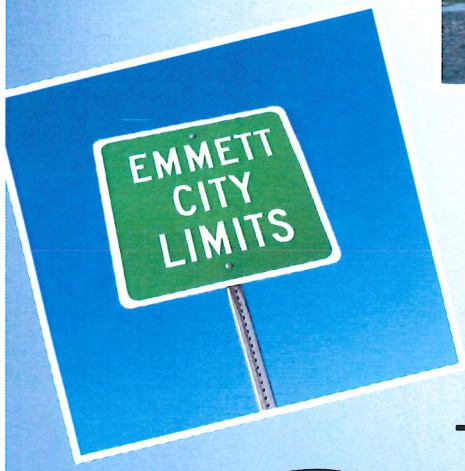

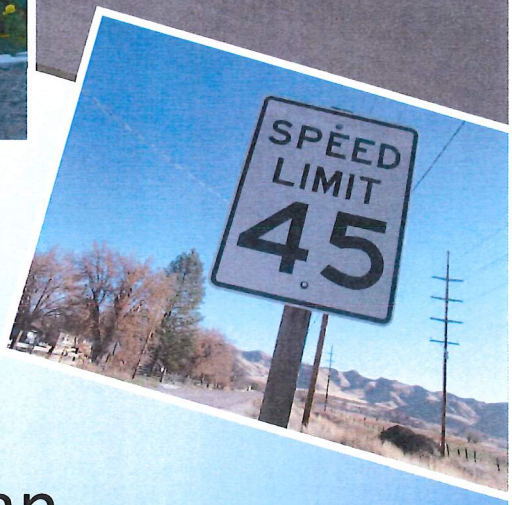

City of Emmett Transportation Plan

February 2018

PROFESSIONAL ENGINEER
REGISTERED
2-26-18
12524
STATE OF IDAHO
JUSTIN WALKER

KELLER associates

210022-016

THIS PAGE INTENTIONALLY LEFT BLANK

Table of Contents

Chapter 1 - Introduction 1
1.1 Purpose 1
1.2 Advisory Committee 1
1.3 Emmett and Surrounding Area 3
Chapter 2 - Demographics 4
2.1 Population 4
2.2 Housing Characteristics 6
2.3 Existing Land Use 6
2.3.1 Land Use Recommendations 6
Chapter 3 - Existing Transportation System 8
3.1 Roadway Inventory and Jurisdiction 8
3.2 Functional Classification 10
3.2.1 Current Functional Classification Recommendations 11
3.3 Existing Structures 13
3.3.1 Culverts 13
3.3.2 Bridges 13
3.4 Intermodal Transportation 15
3.4.1 Sidewalks 15
3.4.1.1 ADA Transition Plan 15
3.4.2 Public Transportation 15
3.4.3 Bicycle Facilities and Multi-Use Pathways 18
3.5 Access Management 18
3.5.1 State Highway 16 Access Control 18
3.6 Existing Traffic Volumes 20
3.7 Speed Limits 24
3.8 Crashes and Safety Experience 26
Chapter 4 - Asset Management 29
4.1 Target Goals for Transportation Assets 29
4.2 Pavement Management 30
4.2.1 Pavement Inventory and Condition Survey 30
4.2.2 Types of Pavement Distress 32
4.2.3 Summary of Observed Conditions 34
4.2.4 Pavement Management Philosophy 37

4.2.5 Conditions Analysis 38
4.2.6 Maintenance Scenario Analyses 39
4.2.6.1 Scenario 1: Current Funding Level 40
4.2.6.2 Scenario 2: Ideal Funding Level 41
4.2.6.3 Scenario 3: $515K Funding Level 42
4.2.7 Pavement Management Recommendations 43
4.3 Traffic Sign Management 44
4.3.1 Inventory and Condition Survey 44
4.3.2 MUTCD Retroreflectivity Requirements 48
4.3.3 Signage Recommendations 49
Chapter 5 - Future Transportation System 51
5.1 Truck Routes 51
5.2 Historic Byway 51
5.3 Highway 16 to Main Street Bypass Corridor 51
5.3.1 Existing Conditions 51
5.3.2 Bypass Area Traffic Volumes 52
5.3.3 Cross Section and Right of Way 55
5.3.4 Potential Environmental Obstacles 55
5.3.5 Potential Alignments 55
5.3.6 Access Management 56
5.3.7 Phasing 56
5.3.8 Bypass Conclusions 56
5.4 Future Traffic Volumes 58
5.5 Future Functional Classification and New Roads 59
5.5.1 New Roads 60
Chapter 6 - Site-Specific Analysis and Recommendations 62
6.1 S Johns Ave and Highway 16 (19 total crashes) 66
6.2 S Washington Ave & Highway 52/16 (17 total crashes) 67
6.3 Washington Ave & Main St (14 Crashes) 68
6.4 S Washington Ave & 6th St (14 Crashes) 69
6.5 S Washington Ave & 12th St (12 Crashes) 70
6.6 S Washington Ave & 4th St (11 Crashes) 71
6.7 N Washington Ave & Park St (7 Crashes) 72
6.8 S Washington Ave & 5th St (6 Crashes) 74

6.9 N Washington Ave & Musser St (5 Crashes) 75
6.10 S Hayes Ave & E 1st St (5 Crashes) 76
6.11 Commercial Ave & W Main St (5 Crashes) 77
6.12 S Johns Ave & 4th St (5 Crashes) 78
6.13 New Traffic Signal and Roundabout Evaluations 79
6.13.1 Washington Avenue and Park Street 79
6.13.2 12th Street and Washington Avenue 79
6.14 State Highway 52 Improvements by ITD 80
6.15 School Zones 81
Chapter 7 - Capital Improvements 81
7.1 Capital Improvement Projects 81
7.1.1 South Johns Avenue Improvements 81
7.1.2 Washington Avenue Two-way Left-Turn Lane and Speed Limit Increase 81
7.1.3 Mid-Block Pedestrian Crossing on Washington Avenue between 6th and 10th Streets 82
7.1.4 Pedestrian Crossing Improvements – 6th and 10th Street 82
7.1.5 Reflective Traffic Signal Borders 82
7.1.6 Advance Signal Warning Beacons on SH-16 83
7.1.7 12th and Washington Intersection Sight Distance Improvements 83
7.1.8 ADA Curb Ramp Improvements 83
7.1.9 Main Street Farmers Coop Canal Bridge 83
7.2 Capital Improvement Plan 84
7.3 Master Street Plan Map 84
Chapter 8 - Funding 87
8.1 Local Funding 87
8.1.1 Idaho Users Revenue Fund 87
8.1.2 Impact Fees 87
8.1.3 Property Taxes 87
8.2 State and Federal Funding 88
8.2.1 Surface Transportation Program (STP) Urban 88
8.2.2 Local Highway Safety Improvement Program (LHSIP) 88
8.2.3 Transportation Alternatives Program (TAP) 88
Chapter 9 - Updates to the Transportation Plan 89
9.1 Capital Improvement Plan Updates 89
9.2 Pavement Management Plan Updates 89
9.3 Sign Management Plan Updates 89

Appendices

Appendix A – Access Management Plan
Appendix B – Culvert Inventory
Appendix C – ITD Bridge Inspection Reports
Appendix D – ADA Transition Plan
Appendix E – BMPO LOS Methodology
Appendix F – Traffic Count Data
Appendix G – Asphalt Distress Rating Form
Appendix H – Road Inventory Data
Appendix I – Traffic Sign Inventory
Appendix J – FHWA Retroreflectivity Handout
Appendix K – Traffic Volume Projections
Appendix L – Opinion of Probable Costs
Appendix M – State Highway 16 Access Correspondence with ITD

List of Figures

Figure 1 - Historic and Projected Populations 5
Figure 2 - Population Age Distribution 5
Figure 3 - Emmett Housing Occupancy Distribution 6
Figure 4 - Land Use Map 7
Figure 5 - Street Jurisdiction 9
Figure 6 - Current Functional Classification (ITD 2025) 12
Figure 7 - Sidewalk Map 16
Figure 8 - ADA Curb Ramp Compliance 17
Figure 9 - Pathway Map 19
Figure 10 - Existing Traffic Volumes and Recent Count Locations 22
Figure 11 - Washington Intersection LOS Figures 24
Figure 12 - Existing LOS 25
Figure 13 - Annual Crash Statistics for Emmett 27
Figure 14 - Crash Locations and Type (2009-2014) 28
Figure 15 - Acceptable RSL Distribution 29
Figure 16 - Typical iWorQ Pavement Inventory Data 31
Figure 17 - 2014 Network Average RSL Distribution 34
Figure 18 - 2014 Pavement Condition 35
Figure 19 - Recommended Pavement Treatments 36
Figure 20 - Pavement Life Cycle 37
Figure 21 - 2016 Network RSL Distribution 39
Figure 22 - Scenario 1: RSL Distribution for Year 2022 41
Figure 23 - Scenario 2: RSL Distribution for Year 2022 41
Figure 24 - Scenario 3: RSL Distribution for Year 2022 42
Figure 25 - Scenario 3: RSL Distribution for Year 2028 43
Figure 26 - Traffic Sign Conditions 46
Figure 27 - Traffic Sign Post Conditions 47
Figure 28 - Perceived Bypass Route 52
Figure 29 - Bypass Area 2013 and 2035 Forecasted AADT 54
Figure 30 - Bypass Alignment Alternatives 57
Figure 31 - Future Functional Classification and New Roads 61

Figure 32 - Intersections with High-Frequency of Crashes 62
Figure 33 - W3-3 “Signal Ahead” Sign 66
Figure 34 - Signs for "Right Turn Only" Configuration 74
Figure 35 - R7-1 "No Parking" Sign 76
Figure 36 - Back-In Parking Only Signs 78
Figure 37 - Master Street Plan Map 85
Figure 38 - Master Street Plan Map (Aerial) 86

List of Tables

Table 1 - Population Growth of Emmett and Nearby Communities 4
Table 2 - Emmett City Population Growth 4
Table 3 - Land Use Summary 7
Table 4 - Bridge Sufficiency Data 14
Table 5 - 2014 AADT from ITD 20
Table 6 - Current LOS for Selected Roadways 23
Table 7 - Crash Injury Summary 26
Table 8 - Maintenance Performance Chart 38
Table 9 - 2016 Subjective Pavement Conditions 39
Table 10 - Annual Road and Street Financial Report Summary (2004-2014) 40
Table 11 - Traffic Sign Post Data Summary 45
Table 12 - Traffic Sign Inventory Data Summary 45
Table 13 - MUTCD Street Name Sign Text Size Requirements 49
Table 14 - Current and Forecasted ADT for Substation and SH-52 53
Table 15 - Future Traffic Volumes 58
Table 16 - 2035 LOS 58
Table 17 - Functional Classification Changes 59
Table 18 - Top 12 Crash Locations 63
Table 19 - Most Common Crash Types 63
Table 20 - Most Common Contributing Circumstances 64
Table 21 - Diagram of Crash Types 65
Table 22 - Capital Improvement Plan 84

List of Pictures

Picture 1 - Culvert: Good Condition 13
Picture 2 - Culvert: Fair Condition 13
Picture 3 - Culvert: Poor Condition 13
Picture 4 - Sign near Gala Trail and Queen Anne Dr. 50
Picture 5 - Sign in Subdivision 50
Picture 6 - W15-1 Playground Sign 50
Picture 7 - Reflective Traffic Signal Borders (Source: FHWA) 83

Chapter 1 - Introduction

1.1 Purpose

The City of Emmett's former transportation plan was adopted in 2003. At the time of this report that plan is over ten years old and significant change has occurred within Emmett. In 2013 Emmett began working with Keller Associates, Inc. on the development of this updated transportation plan. The goal of the new transportation plan is to evaluate the existing transportation network within the City of Emmett, identify needs within the transportation system, and present a plan to address those needs. It is noted that limited City funds required the plan update to be completed over 5 fiscal years.

Pavement, sign, traffic, culvert, crash, and other data were collected and evaluated. Structured discussions with City officials were held to gain an understanding of the local transportation system and the challenges facing the City of Emmett in maintaining and improving the system. This data and subsequent analysis was used to form the basis for the improvements proposed in this study. The Emmett Transportation Plan establishes a long-range Capital Improvement Plan (CIP) responding to these identified needs.

This Transportation Plan is intended to be a living document that Emmett can use to continually identify and prioritize transportation deficiencies within the City. As part of the development of this plan, asset management tools were updated to assist city officials in making informed decisions.

A pavement management system was updated and resides in iWorQ, a web-based data management system created for local government agencies. The data in the pavement management system should be updated as improvements are made and changes occur. It should be updated at least every two to three years. Additionally, the CIP was created with the expectation that it be revisited and updated on an annual basis or as projects are completed, new needs are identified, or project priorities are changed.

1.2 Advisory Committee

Officials from the City of Emmett and Gem County were consulted throughout the development of this study. This committee was utilized to extend participation in the study to other interests and jurisdictions and to act as a conduit for local information regarding the efficiency of the current transportation system, and to review study findings and documentation to ensure the study is responsive to the actual needs of Emmett. Members of the advisory committee included:

- Gordon Petrie, Mayor of Emmett
- Bruce Evans, Emmett Public Works Superintendent
- Clint Seamons, Emmett Construction Manager
- Neal Capps, Gem County Road and Bridge Director
- Brad Clark, Gem County Planning Director (former)
- Brian Sullivan, Emmett Building Official/Zoning Administrator
- Robert Roberts, Gem Community Economic Developer

Several meetings were held in Emmett during the development of this study. The first meeting was held on April 15, 2013 and involved going over the specific tasks for which Keller and the City would be responsible.

Throughout the development of the project, the City elected to have Keller Associates conduct a roadway condition assessment, rather than do it in-house as originally planned. This was discussed during a meeting on November 22, 2013. A March 7, 2014 progress meeting was held where Keller Associates confirmed that the field data collection portion of the plan would commence in May 2014.

Another progress meeting occurred on July 11, 2014 where a summary of the field work was presented. Authorization to proceed with remaining tasks was granted by the City. A September 16, 2014 meeting presented analysis from the pavement condition assessment and traffic sign inventory. The city provided comments regarding roads that had been reconstructed or improved since the original condition assessment, and pointed out traffic signs that were missing from the inventory data.

Keller personnel inventoried culvert and related features in the field during November and December 2014. The inventory was presented to the City during December 19, 2014 and January 9, 2015 progress meetings. Traffic volumes and other analyses regarding the potential need for a bypass for Highway 16/52 were presented. Findings of the preliminary analyses indicated that a Highway 16/52 bypass is not warranted now or in the near future.

On October 5, 2015 Keller Associates and the City held a meeting to discuss the direction the Master Street Plan, Capital Improvement Program (CIP), and updates to the Roadway Public Works Standards. In this meeting the City elected to use ITD's Functional Classifications of the streets and roads within the City's jurisdiction. The City also identified several areas of concern relating to traffic congestion and roadway geometry problems to be investigated during the Master Street Plan and CIP efforts. The City also expressed the need for updates to the Public Work Roadway Standards, mainly with regards to access management on arterial roads. Since the October 5, 2015 meeting, Keller Associates held several meetings with City personnel and officials to update the City's Public Works standards. When the Public Works Standards update is complete, a copy will be available via the City's website (http://www.cityofemmett.org/).

Part of this overall transportation planning effort included the development of an Americans with Disabilities Act (ADA) Transition Plan for curb ramps. The development of the Transition Plan incorporated input from City personnel. The final ADA Transition Plan was presented to the advisory committee during the meeting on October 5, 2015 summarizing the inventory of curb ramps within Emmett and steps the City can take to achieve compliance. It was then presented to City Council for adoption on January 23, 2016.

Finalizing the Transportation Plan occurred throughout 2016, and a meeting took place on November 22 to discuss capital improvement projects, a master street map, and final decisions regarding the plan. The Transportation Plan was finalized in February 2017.

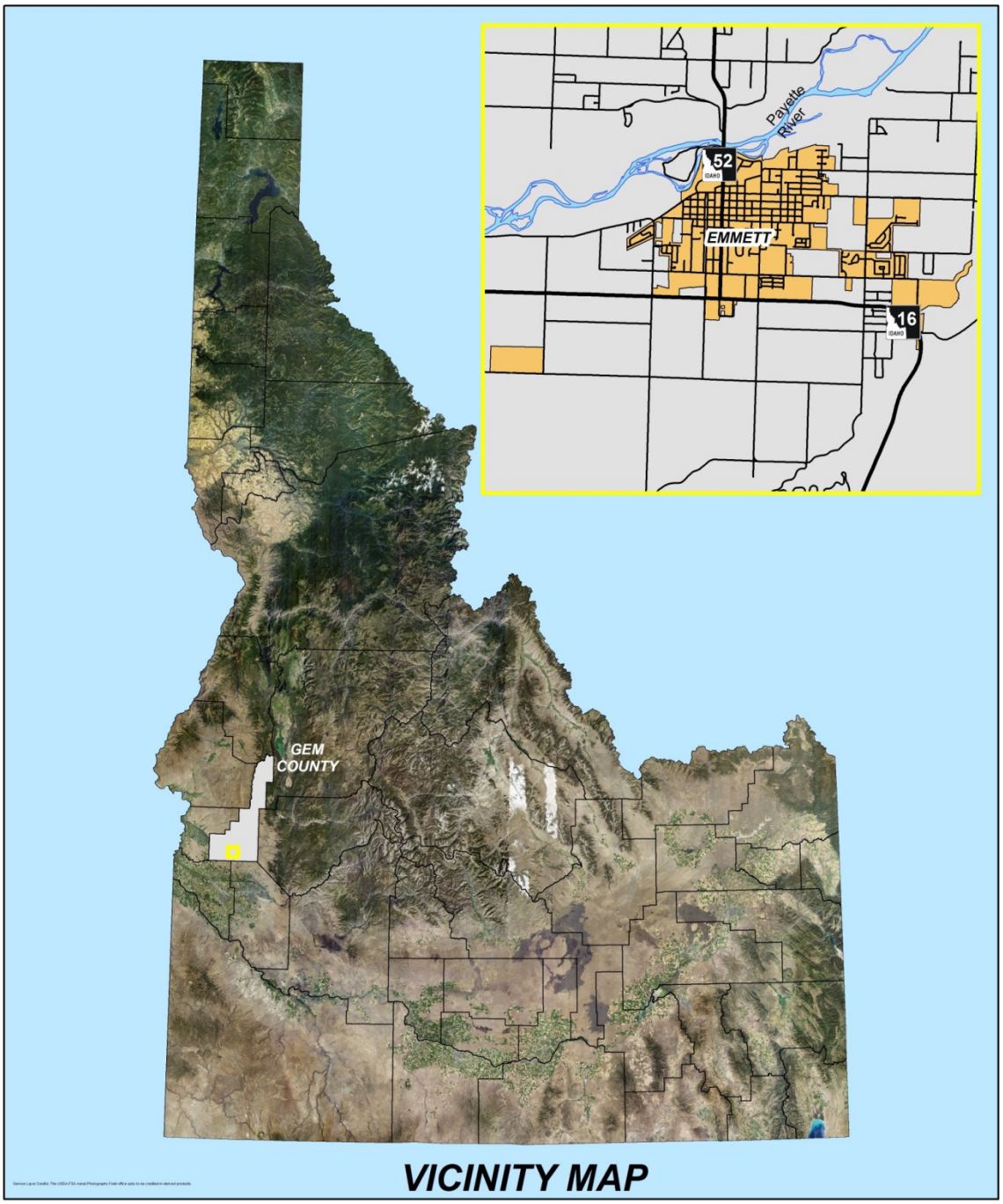

1.3 Emmett and Surrounding Area

Emmett is the only incorporated city in Gem County located in west-central Idaho and is part of the Boise-Nampa Metropolitan Statistical Area. The city has a total area of approximately 2.8 square miles. It is located along the Payette River at an elevation of 2,352 feet.

Chapter 2 - Demographics

2.1 Population

The populations in the City of Emmett and Gem County from the 2000 U.S. Census were 5,490 and 15,181, respectively. The City population from the 2010 U.S. Census was 6,557, a 19.4% increase from 2000; the County 2010 population was 16,719, a 10.1% increase from 2000. The 2010 population density in Emmett was 2,341.8 inhabitants per square mile. Table 1 lists populations and growth rates for Emmett and other nearby communities as reported by the U.S. Census Bureau.

Table 1 - Population Growth of Emmett and Nearby Communities

Community	2000 Population	2010 Population	% Change
Emmett	5,490	6,557	19.4%
Horseshoe Bend	770	707	-8.2%
Star	1,795	5,793	222.7%
Middleton	2,978	5,524	85.5%
Gem County	15,181	16,719	10.1%

Table 2 was created to list historic populations and used to determine annual growth rates for Emmett.

Table 2 - Emmett City Population Growth

City of Emmett		
Year	**Population**	**Annual Growth**
1950	3,067	-
1960	3,769	2.1%
1970	3,945	0.5%
1980	4,605	1.6%
1990	4,601	0.0%
2000	5,940	2.6%
2005	6,124	0.6%
2009	6,350	0.9%
2010	6,557	3.3%
	20-year avg.	**1.79%**
	40-year avg.	**1.28%**

Based on discussion with city personnel, an annual growth rate of 1.5% was utilized to forecast populations through 2040 which is between the 20-year and 40-year growth rates. The historic and forecasted populations for Emmett are shown in Figure 1 on page 5. This same growth rate was used in the water and wastewater master plans developed in recent years. Based on the annual growth rate of 1.5%, it is anticipated that the Emmett transportation system will be serving 10,249 residents in 2040, a

total increase of 56% from the 2010 population. While this is a significant increase, it is spread out over a 30-year period and the resulting population in Emmett is still relatively low.

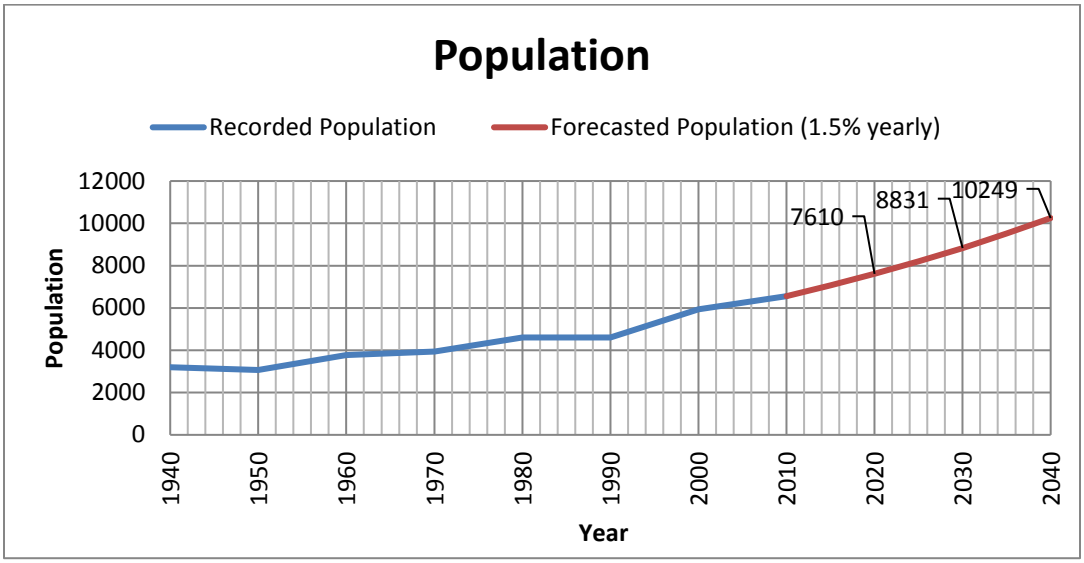

Figure 1 - Historic and Projected Populations

Using data from the 2010 Census, Figure 2 was created to show the population age distribution of Emmett and the State of Idaho across their respective populations.

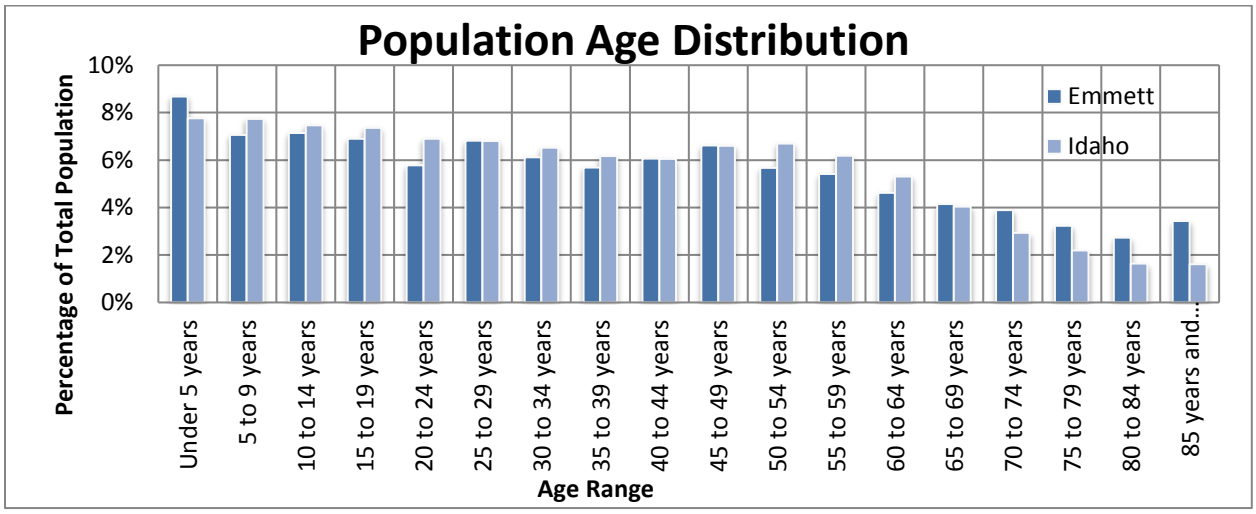

Figure 2 - Population Age Distribution

Emmett's population is fairly uniformly distributed across ages 20 through 44. Approximately 27% of the population is under 18 years of age, which is roughly equal to that of the state of Idaho. Emmett has a higher portion of the population under 5 years of age than that of Idaho as a whole. There is a higher percent of Emmett's population age 65 and older than that of the state of Idaho. This distribution puts the median age in Emmett at 36.3 years as compared to Idaho at 34.6 years. The gender makeup of Emmett is 50.1% male and 49.9% female.

2.2 Housing Characteristics

As of the 2010 Census, there were 2,916 housing units in Emmett, of which 2,616 (89.7%) units were occupied and 300 (10.3%) were vacant. Figure 3 shows the Emmett housing occupancy distribution. Of the 2,616 households in Emmett, 1,165 (44.5%) are husband-wife families, 130 (5.0%) are Male householders with no wife present, and 340 (13.0%) are female householders with no husband present. The average household size was 2.51.

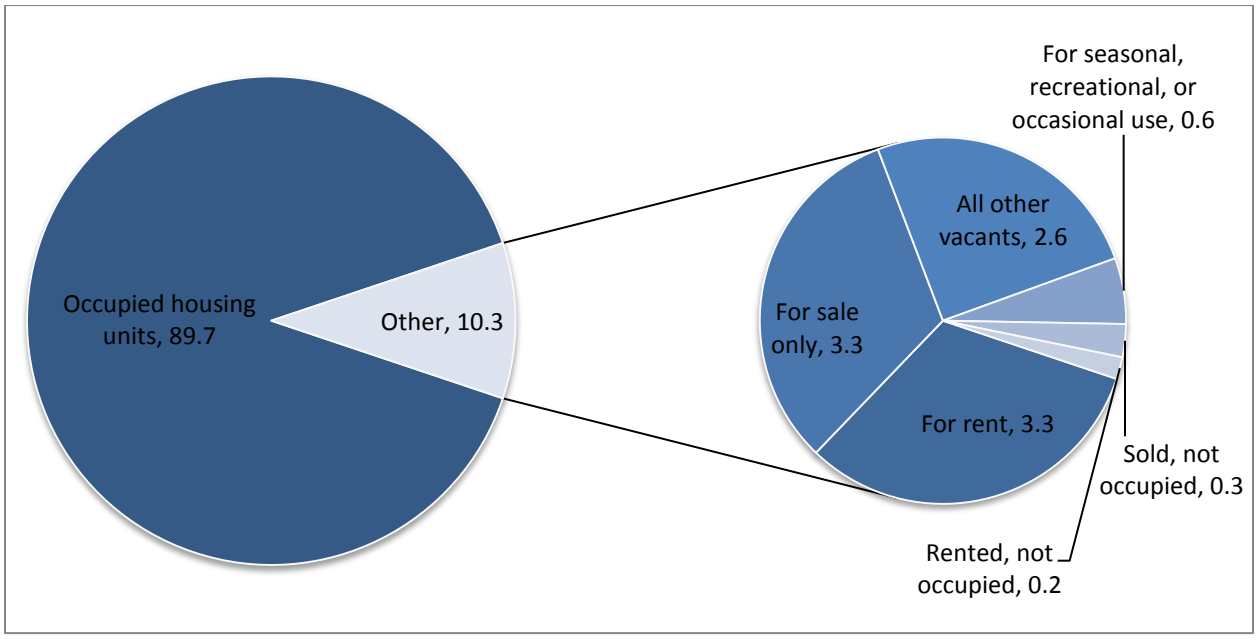

Figure 3 - Emmett Housing Occupancy Distribution

2.3 Existing Land Use

Existing land use for Emmett was provided by the City and Gem County. Figure 4 is a map showing the City's current land use, and Table 3 on page 7 summarizes the breakdown of each land use type by acres. The majority of land in Emmett is considered residential (70.6%). 13.1% of land is considered public, and 16.2% is considered industrial or commercial.

2.3.1 Land Use Recommendations

The land use regulatory authority of The City of Emmett is the single most important determinant of where development and growth will occur. Designation of where future growth will be located will determine future needs of the transportation network. It is recommended that as new development or major changes to existing developments occurs the City of Emmett and development applicants work together to assess traffic, land use, and zoning impacts as part of an impact study according to Idaho Code. Traffic impact studies should follow the procedures and format specified in Emmett's Access Management Plan (see Appendix A).

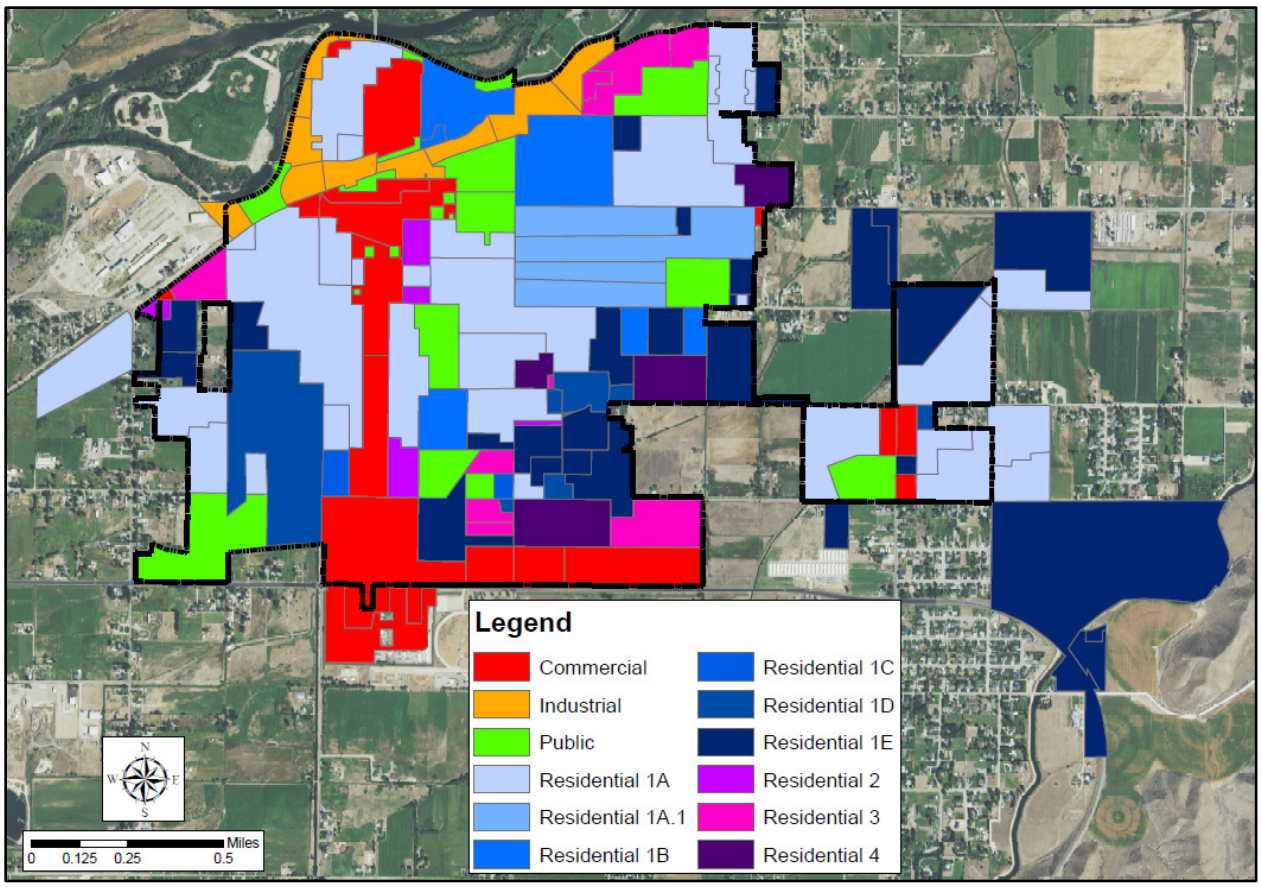

Figure 4 - Land Use Map

Table 3 - Land Use Summary

Land Use	Acres	% of Total
Commercial	213	12.7%
Industrial	59	3.5%
Public	219	13.1%
Residential 1A	536	32.0%
Residential 1B	82	4.9%
Residential 1C	7	0.4%
Residential 1D	83	5.0%
Residential 1E	345	20.6%
Residential 2	18	1.1%
Residential 3	61	3.6%
Residential 4	50	3.0%
Total	**1,675**	**100.0%**

Chapter 3 - Existing Transportation System

3.1 Roadway Inventory and Jurisdiction

Emmett is linked to the rest of Idaho and the northwest region by State Highway 52 and State Highway 16. State Highway 16, also known as the Central Valley Expressway, begins at the junction of US-20/US-26 and continues north over the Freezeout Grade into the Emmett Valley. It curves west for a short distance then terminates at the junction with State Highway 52 at the southern Emmett City Limits. Highway 52 enters the southern portion of Emmett from the west and turns 90 degrees to the north at the State Highway 16 junction. The north/south portion of Highway 52 through Emmett city limits is called Washington Street. North of Emmett, State Highway 52 is known as the Black Canyon Highway.

The Emmett road system consists of approximately 38.4 miles of roadway laid out predominantly in a grid pattern with roads running north/south and east/west. The majority of these roads are paved. There are a few sections (518 feet total) of roads that are unpaved in the north portion of the city; portions of Oxley Road and Barton Street.

All roads within city limits are maintained by Emmett with the exception of Washington Avenue (State Highway 52) and State Highway 16, both of which are maintained by the Idaho Transportation Department (ITD). Roads outside of city limits but within the Emmett City Area of Impact are required to follow Emmett subdivision ordinances but are maintained by the Gem County Road and Bridge Department. Figure 5 on page 9 shows jurisdiction and surface type of roadways in Emmett.

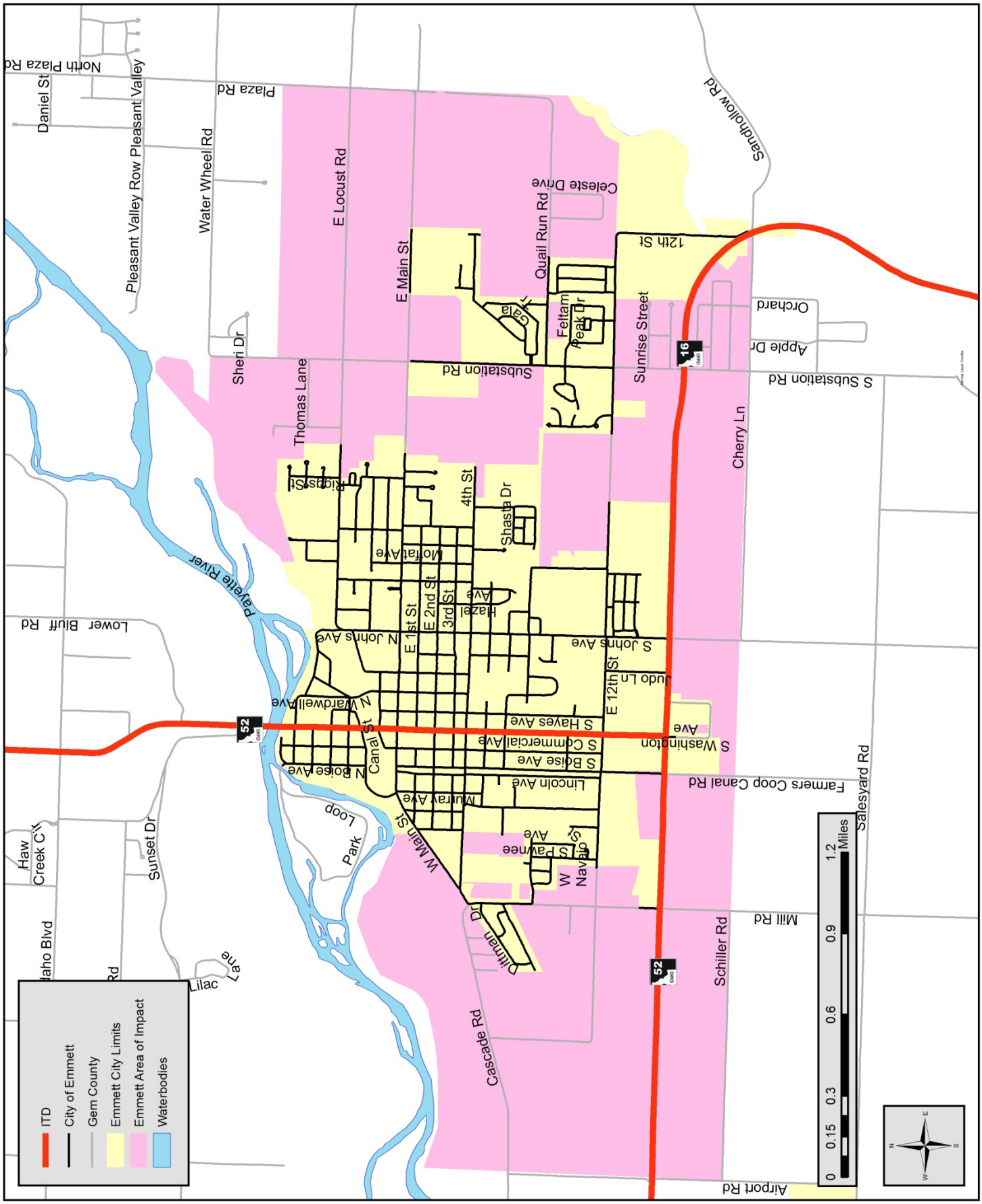

Figure 5 - Street Jurisdiction

3.2 Functional Classification

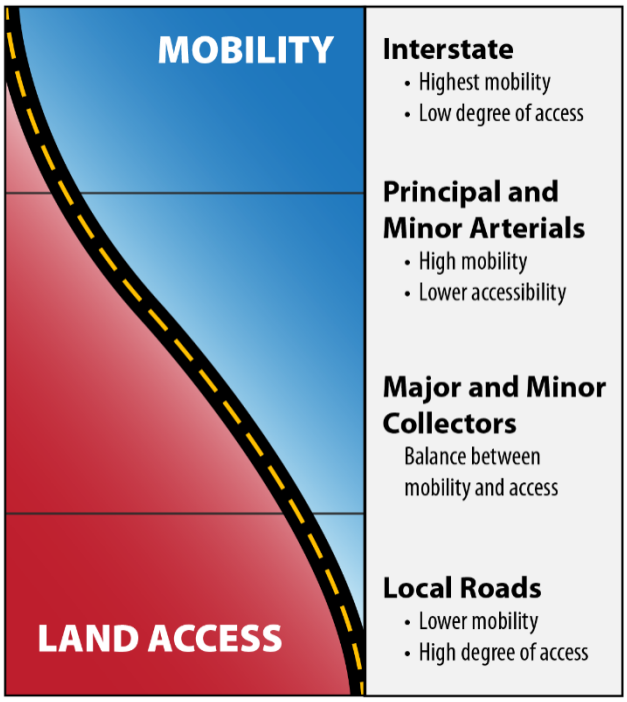

The Functional Classification System is the process by which streets and highways are grouped into classes according to the type of service they provide. In simplistic terms functional classification reflects a roadway's balance between providing land access versus providing point to point mobility. Generally, roadways fall into one of three broad categories: arterials, collectors, and local roads.

Historically urban and rural area functional classification designations differed from one another. In 2013 the Federal Highway Administration (FHWA) changed this policy such that there is no difference between urban and rural classification. The FHWA functional classifications are explained below.

- Principal Arterial
  - Interstate
  - Other Freeways & Expressways (OF&E)
  - Other (OPA)
- Minor Arterial
- Collector
  - Major Collector
  - Minor Collector
- Local

Arterial: These roads have the highest speeds with the goal of providing a high level of mobility with limited access. They are more numerous than interstates and provide a connection between regional areas. Common characteristics of arterials are:

- Moderate to Long Distance
- High Speed
- High Traffic Volume (Can be multilane)
- Link between smaller communities
- Link communities to interstates

Collectors: Collectors gather traffic from local roads and connect them with arterials. They provide the most balance between access and mobility. In rural areas collectors are often divided into major and minor collectors. Common characteristics of collectors include:

- Moderate distance

- Moderate speeds
- Moderate to high traffic volumes

Local: Local roads primarily provide access to land and individual homes, but with limited mobility. Common characteristics of local roads include:

- Access to adjacent land
- Shortest distance
- Low speed
- Low volume

These classifications are officially recognized by FHWA and ITD. While a local jurisdiction such as Emmett may consider their own streets as collectors and arterials relative to local conditions, it is the official FHWA/ITD classification maps that are utilized for funding and planning purposes. ITD updates the statewide functional classification after the decennial census and typically has it completed within five years and serves as the official map for the next 10 years; the current map is 2025. ITD will begin updating after the 2020 census and have a new statewide update published in 2025; it will be considered the 2035 map.

Local agencies can submit change requests any time; this process involves submitting an Idaho Functional Classification / Urban Boundary Change Request Form to ITD. This form requires information about the roadway and justification for the request. This form can be found in the ITD Systems Manual[1]. ITD reviews the change, submits it to FHWA who then makes the final decision, usually within two or three business days after receiving the request from ITD.

The official Functional Classification of roads in Emmett was obtained from ITD. Stage Highways 16 and 52 are classified as principal arterials. Main Street from Highway 52 to Substation Road is classified as a minor arterial. Substation from Main Street south to Highway 16 is also a minor arterial. Several roads within the City are classified as major collectors and the rest are considered local roads. There are no minor collectors within Emmett. Refer to Figure 6 on page 12 for a map showing the official functional classification recognized by ITD and FHWA.

3.2.1 Current Functional Classification Recommendations

There are no recommended changes to functional classification of streets in Emmett at this time. However, future conditions may warrant updating functional classification. Section 5.5 on page 59 contains discussion on future functional classification recommendations.

[1]The most current edition of the ITD Systems Manual should be consulted. At the time of this report the most current is Version 1.9, printed September 1, 2014.

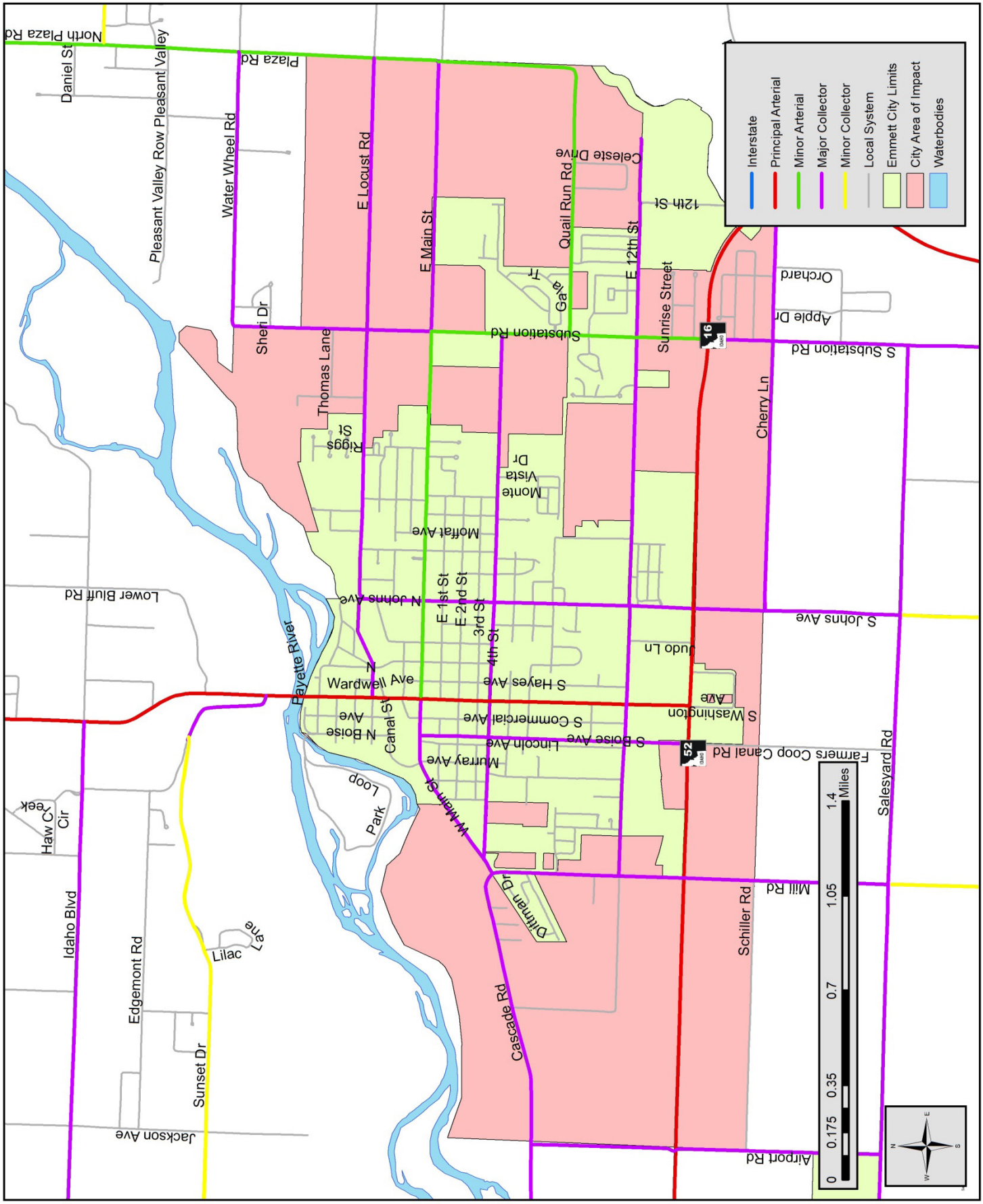

Figure 6 - Current Functional Classification (ITD 2025)

3.3 Existing Structures

3.3.1 Culverts

A culvert inventory was created by Keller personnel in November and December of 2014. The inventory consisted of mapping culvert points with a GPS unit, performing a basic inspection, and photographing the culverts. Mapped points were typically each end of a culvert. A total of 55 points were mapped. Existing culvert locations were obtained from maps from past transportation planning documents provided by the City. Additional culverts were mapped as they were discovered in the field. Some of the mapped culverts may be privately-maintained.

Picture 1 - Culvert: Good Condition

Picture 2 - Culvert: Fair Condition

Picture 3 - Culvert: Poor Condition

Culvert condition was rated based on a visual condition assessment as good, fair, or poor. Good indicated apparent adequate structural condition; culvert ends may need cleaning. Fair would indicate the need for cleaning and slight structural deterioration. Poor would indicate the need for extensive cleaning, poor structural condition, or potential need for replacement. These ratings are subjective and are provided only to give a general idea of the apparent visual condition of the culverts. Refer to the pictures above of culvert rating assessments. See Appendix B for data from the culvert inventory and individual culvert assessments.

3.3.2 Bridges

Bridges with a span of 20 feet or greater are inspected through a national program administered by ITD. The visual inspection is intended to document surface and underwater structural conditions as well as provide a planning-level cost estimate for improvements. From these inspections, a sufficiency rating is calculated. The sufficiency rating ranges from 0 to 100 (100 being the best score possible) and reflects the structural adequacy and condition, serviceability, compliance with current design standards, and importance for public use. The sufficiency rating also determines the eligibility for federal funds. Under this program bridges are inspected every 12 to 24 months.

There are six bridges within the jurisdiction of the City of Emmett which are inspected by ITD under this program. Of these six bridges, four of them are generally in good condition with scores all above 68. See Appendix C for the full ITD Bridge Inspection Report for each of the six bridges. Table 4 on page 14 shows the current condition of each bridge inspected by ITD.

Table 4 - Bridge Sufficiency Data

Bridge Key	Route	Milepost	Intersected Feature	Sufficiency Rating	Deficiency	Proposed Improvements Cost
19970	STC3841; SUBSTATION	2.41	LAST CHANCE CANAL	38.8	FO	COMPLETED IN 2016
28065	W. 12TH STREET	101.36	FARMERS COOP CANAL	68.6	ND	$ 660,000*
28136	WARDWELL STREET	100.41	FARMERS COOP CANAL	93.9	ND	-
28170	W. 4TH STREET	100.44	FARMERS COOP CANAL	92.3	ND	-
28175	W 2ND STREET	100.21	FARMERS COOP CANAL	69.0	SD	$ 468,000*
28180	MAIN STREET	4.23	FARMERS COOP CANAL	66.5	SD	$ 1,110,000

FO – Functionally Obsolete
ND – Not Deficient
SD – Structurally Deficient
* Total Project Cost from ITD Bridge Inspection Report

The bridge spanning the Last Chance Canal on Substation Road is functionally obsolete. A functionally obsolete bridge is one that was built to outdated standards that no longer meets the minimum federal requirements for a new bridge. These bridges are not automatically rated as structurally deficient, nor are they inherently unsafe. Functionally obsolete bridges include those that have sub-standard geometric features such as narrow lanes, narrow shoulders, poor approach alignment or inadequate vertical under clearance. This bridge on Substation Road was replaced in 2016.

The bridge on W 2nd St spanning the Farmers Coop Canal is rated as structurally deficient. Structurally deficient indicates that the deck, superstructure, substructure, or culvert is rated in "poor" condition (0 to 4 on the National Bridge Inventory rating scale). It generally means that the condition of the bridge includes a significant defect, which often means that speed or weight limits must be put on the bridge to increase safety. Structurally deficient bridges are not inherently unsafe.

The bridge on Main Street spanning the Farmers Coop Canal was rated as structurally deficient in 2017. Rehabilitation or reconstruction is recommended to improve a Minimum Tolerable structure condition of 4.

Besides the six bridges listed in Table 4, the City also has two pedestrian bridges, one on Main Street and one on N Johns Avenue crossing the Farmers Co-op Canal. There are also approximately five culvert crossings of the Sand Hollow Ditch and many other small culverts within the City's jurisdiction with spans less than 20 feet. These culvert crossings and pedestrian bridges are not inspected by ITD. At this time the City does not have a small bridges/culvert inspection program. **It is recommended that the City implement a program to inspect the small bridges and culverts not inspected by ITD to establish the current condition of each structure on a regular basis.** Such a program will enable the City to make informed decisions on how to properly maintain each structure.

3.4 Intermodal Transportation

3.4.1 Sidewalks

Rehabilitation, expansion, and maintenance of the Emmett public sidewalk system were identified as critical transportation issues in the 2014 Gem County Comprehensive Plan. Existing sidewalks within Emmett city limits are most continuous near the downtown area, between 4th Street, Main Street, McAuliffe Avenue, and Pine Avenue. This area is evident in Figure 7 on page 16. Sidewalks are less continuous in neighborhoods immediately to the north, northeast, and south of downtown. Some outlying neighborhoods to the south, southeast, and southwest of downtown are devoid of sidewalks, while some have sidewalks but do not connect to the downtown network.

As the sidewalk system is upgraded, improved, and expanded, design standards and requirements set forth by the Americans with Disabilities Act (ADA) must be followed. Existing sidewalk may not be compliant with current ADA requirements. If roadwork above and beyond routine maintenance (surface alteration or reconstruction) is performed, adjacent pedestrian facilities, including sidewalk and curb ramps, must be brought into ADA compliance. Further discussion on ADA and Emmett's pedestrian facilities is included in the following section.

3.4.1.1 ADA Transition Plan

The 2015 City of Emmett ADA Transition Plan for Curb Ramps evaluated the compatibility of existing pedestrian ramps with Americans with Disabilities Act (ADA) standards. The complete report is included in Appendix D. A brief summary of the findings is included in this section. The ADA requires all ramps to follow specific design criteria. Of the 520 inventoried ramps within Emmett city limits, a total of eight ramps complied with ADA design standards. Ramps were absent at 290 other locations. Locations of the inventoried and compliant ramps are shown in Figure 8 on page 17.

The plan recommends that the City allocate an annual budget for correcting deficient ramps. The plan also prioritizes deficient ramps by location and extent of deficiency to help the City select which ramps to reconstruct each year.

Many ramps will likely be reconstructed as part of larger transportation construction projects, such as the South Johns Roadway Restoration project. This project will widen S. Johns Avenue and add sidewalk, ADA compliant ramps, and on-street bike lanes on both sides of S. Johns Avenue from 4th Street to 12th Street.

3.4.2 Public Transportation

The 2014 Gem County Comprehensive Plan identified inter-county commuting and alternative transportation choices as two critical transportation issues. Typically, there is relatively little demand for public transportation in rural communities. However, Gem County has a high percentage of commuters to the Treasure Valley, and the Comprehensive Plan has noted the need for park & ride lots. The Gem County park & ride lot located at the southwest corner of the Highway 16 and S Johns Avenue intersection was opened in 2015 to serve as a community meeting spot for private carpools and ACHD Commuteride vanpools. At the time of this study, Commuteride vanpools operate between Emmett and Boise. Valley Ride Transit (VRT) does not offer bus service to Emmett at the time of this study.

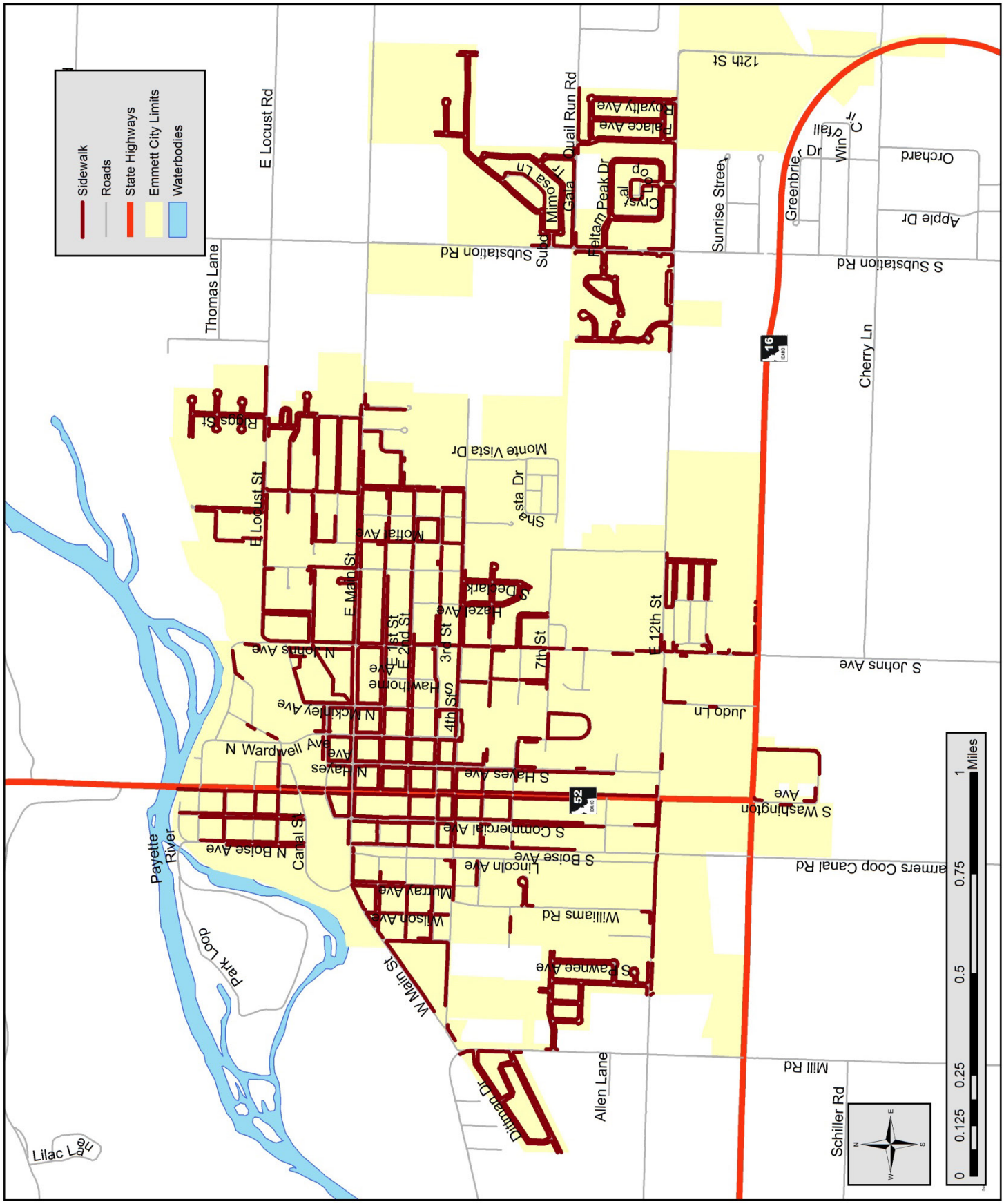

Figure 7 - Sidewalk Map

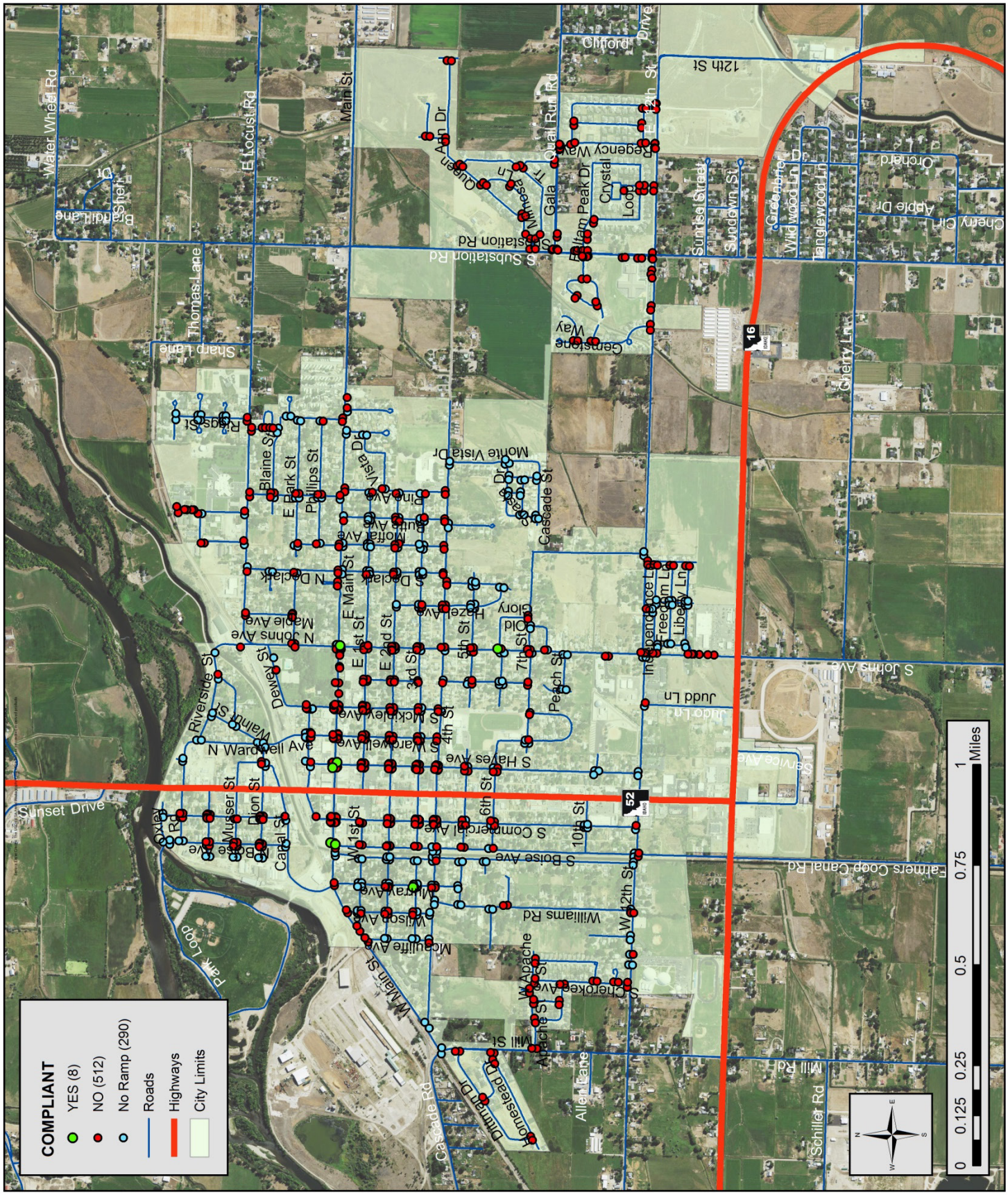

Figure 8 - ADA Curb Ramp Compliance

3.4.3 Bicycle Facilities and Multi-Use Pathways

The City of Emmett Master Pathway Plan was most recently updated in 2012. The plan establishes design standards and proposes locations for future on-street bike lanes and off-street multi-use (pedestrian and bicycle) pathways. Figure 9 on page 19 is referenced from the Master Pathway Plan and shows the locations of existing and proposed future bike lanes and multi-use pathways.

When the Master Pathway Plan was adopted in 2012, there were very few existing bike lanes and pathways in Emmett and the surrounding area. The only on-street bike lanes were situated on both sides of 12th Street from Washington Avenue to 200 feet west of Johnson Avenue. The only recognized off-street pathways were situated around the Gem Island Sports Complex and Emmett wastewater treatment plant, both by the Payette River.

The Master Pathway Plan proposed future on-street bike lanes on portions of north-south roadways Tyler Road, Mill Road, Johns Avenue, Substation Road, and Plaza Road; and east-west roadways Waterwheel Road, Locust Street, Main Street, 4th Street, Quail Run Road, 12th Street, and Sales Yard Road. Off-street pathways are proposed along the Boise Avenue canal, Black Canyon Canal, both sides of the Payette River, and the Idaho Northern & Pacific Railroad if the railroad becomes inactive or abandoned. Pedestrian pathways are also required to adhere to ADA requirements.

3.5 Access Management

Part of this transportation planning effort included the development of access management guidelines for the City. The City of Emmett Access Management Guidelines was created as a separate, standalone document and is included for reference as Appendix A. This transportation plan and the Access Management Guidelines work in conjunction with one another. The Access Management Guidelines provide requirements pertaining to access spacing, design standards including sight distance requirements and turn lanes, and implementation for future and existing conditions including access permits, planning efforts, and traffic impact studies.

3.5.1 State Highway 16 Access Control

ITD has purchased right-of-way adjacent to State Highway 16 through Emmett on both the north and south sides, including accesses, from Substation Road to Juno Road. To preserve the mobility on State Highway 16 and in accordance with future plans for a separated highway configuration, ITD is unable to allow new access to the highway, with the exception of the following:

- One 40’ access on the north side of Highway 16 between Johns and Judo
- One 40’ access on the north side of Highway 16 west of the Drainage District #1 ditch

No access points are available on the south side of Highway 16 except for existing access points. Correspondence with ITD regarding Highway 16 access is included in Appendix M. Master Street Plan figures (Figure 37 and Figure 38) show where available access is located between South Substation Road and Judo Lane.

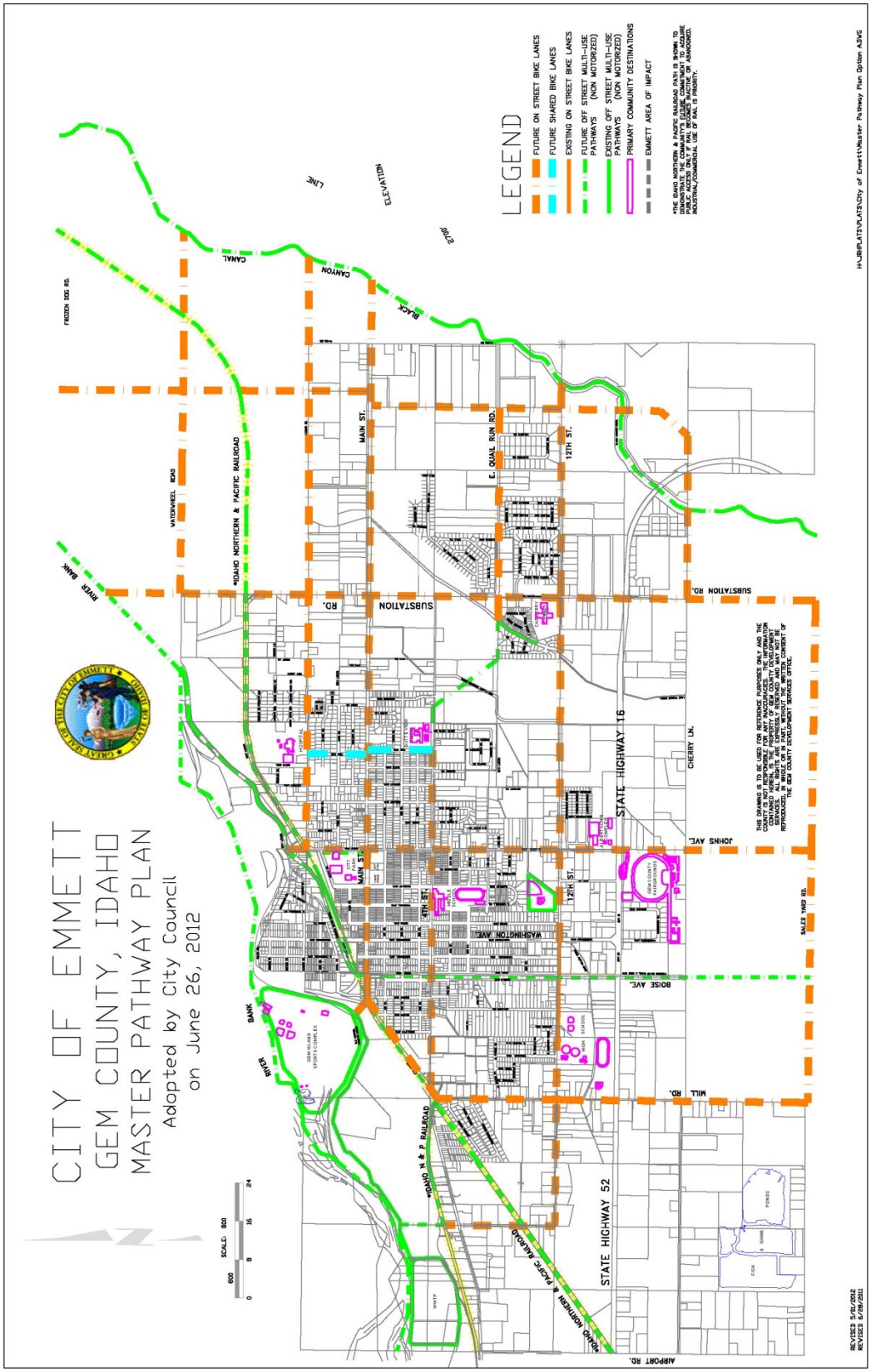

Figure 9 - Pathway Map

3.6 Existing Traffic Volumes

ITD collects traffic data for various roadways throughout the state. Traffic volumes available in Emmett were obtained to determine how much traffic is currently using roads in the city. Annual Average Daily Traffic (AADT) is typically the total volume of vehicle traffic on a roadway for a year divided by 365 days. CAADT refers to Commercial AADT, primarily trucks. AADT for 2014 is listed in Table 5 below. A street map showing AADT for the segments described in Table 5 is shown in Figure 10 on page 22.

Table 5 - 2014 AADT from ITD

Route	AADT	PAADT	CAADT	From	To
12th St	2400	2330	70	WASHINGTON AVE (SH-52)	JOHNS AVE
12th St	1200	1130	70	S BOISE AVE	WASHINGTON AVE (SH-52)
12th St	3200	3130	70	MILL RD	S BOISE AVE
12th St	700	700	0	SUB STATION RD	REGENCY WAY
12th St	1200	1130	70	JOHNS AVE	SUB STATION RD
4th St	1000	1000	0	S WASHINGTON AVE(SH-52)	S JOHNS AVE
4th St	1700	1700	0	MAIN ST, EMMETT	S WASHINGTON AVE(SH-52)
4th St	1000	1000	0	MONTE VISTA DR	S SUB STATION RD
4th St	1500	1500	0	S PINE ST	MONTE VISTA DR
4th St	1500	1500	0	S JOHNS AVE	S PINE ST
Boise Ave	910	910	0	12TH ST	4TH ST
Boise Ave	700	700	0	SH-52	12TH ST
Boise Ave	660	660	0	4TH ST	MAIN ST
Dion St	580	580	0	N WASHINGTON AVE(SH-52)	WARDWELL AVE
Johns Ave	2200	1900	300	E MAIN ST	LOCUST ST
Johns Ave	2700	2320	380	E 2ND ST	E MAIN ST
Johns Ave	4000	3570	430	E 4TH ST	E 2ND ST
Johns Ave	4800	4680	120	E 12TH ST	E 4TH ST
Johns Ave	5000	4620	380	SH-16	E 12TH ST
Locust St	1300	1300	0	JOHNS AVE	N SUB STATION RD
Main St	4400	3770	630	JOHNS AVE	N PINE AVE
Main St	6600	6000	600	WASHINGTON AVE (SH-52)	JOHNS AVE
Main St	3500	3020	480	TYLER RD	WASHINGTON AVE (SH-52)
Main St	2500	2280	220	ERICKSON AVE	SUB STATION RD
Main St	3100	2420	680	N PINE AVE	ERICKSON AVE
Main St	2200	2060	140	SUB STATION RD	PLAZA RD
Quail Run Rd/Plaza Rd	220	220	0	SUB STATION RD, EMMETT	E MAIN ST
SH016	7400	6930	470	S JOHNS AVE	SH-52, EMMETT

Route	AADT	PAADT	CAADT	From	To
SH016	7600	7180	420	SUB STATION RD	S JOHNS AVE
SH016	7800	7420	380	OLD FREEZE OUT RD	SUB STATION RD
SH052	11000	10530	470	SH-16	10TH ST, EMMETT
SH052	5500	5050	450	BOISE AVE	SH-16
SH052	10500	10140	360	PARK ST	CANAL ST
SH052	9300	8990	310	MAIN ST	PARK ST
SH052	4200	3850	350	AIRPORT RD	BOISE AVE
SH052	6900	6550	350	SUNSET DR	LOWER BLUFF RD
SH052	10500	10190	310	1ST ST	MAIN ST
SH052	11000	10490	510	10TH ST	1ST ST
SH052	6600	6120	480	CARSON ST, EMMETT	SUNSET DR
SH052	11500	10880	620	CANAL ST	CARSON ST
Substation Rd	3600	3420	180	E 12TH ST	E MAIN ST
Substation Rd	4500	4330	170	SH-16	E 12TH ST
Substation Rd	1100	1080	20	CHERRY LN	SH-16
Substation Rd	300	280	20	E SALES YARD RD	CHERRY LN

Traffic volumes in Emmett were analyzed to determine if the roadway network can handle traffic demand. To achieve this, a measurement called level of service (LOS) was used to compare daily volumes to roadway capacity based on functional classification and number of lanes. The methodology used to compute LOS in this report is that used by the Bonneville Metropolitan Planning Organization (BMPO); a more detailed description is provided in Appendix E.

Level of Service (LOS) ranges from A through F, and is a qualitative measure used to relate the quality of traffic service in terms of congestion and delay, with A being the best and F being the worst. In general, LOS A, B, C, and D are considered acceptable. LOS A and B indicate a corridor generally operates in free-flow conditions and the ability to maneuver is not restricted or only slightly restricted. During peak hours, some delay may be experienced at controlled intersections. LOS of C indicates minor congestion, where traffic operates at or near free-flow but the freedom to easily maneuver is noticeably restricted. LOS D is indicative of corridors that speeds may decline slightly and the freedom to maneuver is noticeably more limited. LOS E and F are considered to be congested and operating at an unacceptable LOS. LOS E indicates that traffic volumes have reached capacity and traffic flow is unstable. LOS F is where demand exceeds capacity.

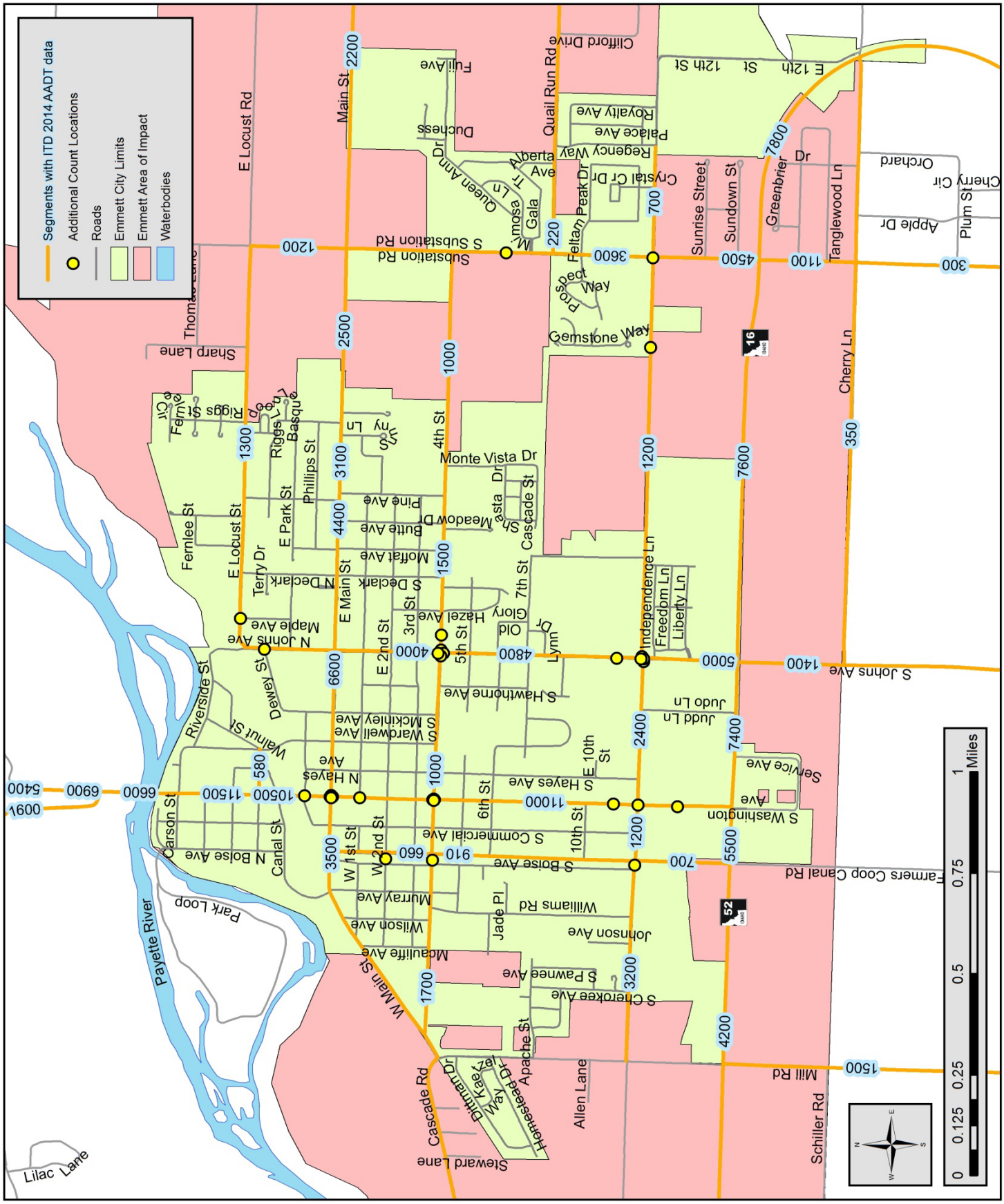

Figure 10 - Existing Traffic Volumes and Recent Count Locations

Selected roadways and their LOS (based on 2014 traffic volumes) are shown in Table 6 below. These selected roadway segments were used in analysis for future traffic volumes (refer to Section 5.4 on page 58).

Table 6 - Current LOS for Selected Roadways

Road	From	To	Functional Class	Lanes	2014 AADT	2014 LOS
12th St	WASHINGTON AVE (SH-52)	JOHNS AVE	Major Collector	2	2400	A
12th St	MILL RD	S BOISE AVE	Major Collector	2	3200	A
4th St	MAIN ST, EMMETT	S WASHINGTON AVE(SH-52)	Major Collector	2	1700	A
4th St	S JOHNS AVE	S PINE ST	Major Collector	2	1500	A
Locust St	JOHNS AVE	N SUB STATION RD	Major Collector	2	1300	A
Main St	WASHINGTON AVE (SH-52)	JOHNS AVE	Major Collector	2	6600	C
Main St	WASHINGTON AVE (SH-52)	JOHNS AVE	Minor Arterial	2	6600	B
Main St	JOHNS AVE	N PINE AVE	Minor Arterial	2	4400	A
Main St	TYLER RD	WASHINGTON AVE (SH-52)	Major Collector	2	3500	A
Plaza Rd	E MAIN ST	WATERWHEEL RD	Minor Arterial	2	2100	A
Plaza Rd	E MAIN ST	WATERWHEEL RD	Major Collector	2	2100	A
SH 16	SUB STATION RD	S JOHNS AVE	Principal Arterial	2	7600	B
SH 16	S JOHNS AVE	SH-52, EMMETT	Principal Arterial	3	7400	A
SH 52	CANAL ST	CARSON ST	Principal Arterial	2	11500	D
SH 52	1ST ST	MAIN ST	Principal Arterial	2	10500	C
SH 52	SH-16	10TH ST, EMMETT	Principal Arterial	3	11000	B
SH 52	10TH ST	1ST ST	Principal Arterial	2	11000	D
Substation Rd	E 12TH ST	E MAIN ST	Minor Arterial	2	3600	A
Substation Rd	SH-16	E 12TH ST	Minor Arterial	2	4500	A

Traffic volumes on Washington Avenue are approaching unacceptable levels for its current configuration. All other traffic volumes in Emmett are currently within generally-accepted thresholds for traffic volumes on two-lane roads and do not indicate a need for capacity improvements. Figure 12 on page 25 shows these corridors color-coded to LOS.

Additional traffic counts were performed by ITD between 2012 and 2014. The locations where these additional counts occurred are also shown on Figure 10 and the data for these additional counts is included in Appendix F. The counts for 2014 were taken at each leg of the 4th/Washington, Main/Washington, and 12th/Washington intersections. This data was used in a simplified calculation of LOS for each leg of these three intersections and provides a more detailed picture of conditions at intersections. Figure 11 on page 24 shows diagrams of each of these three intersections including AADT and LOS for each intersection leg.

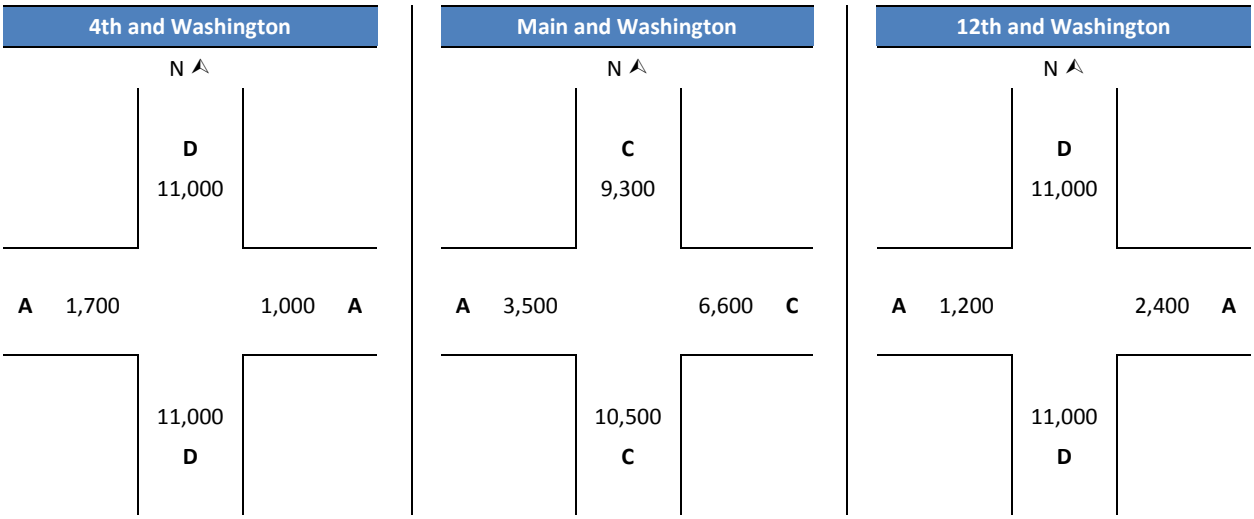

Figure 11 - Washington Intersection LOS Figures

The Washington Avenue intersections with 4th and 12th Streets have LOS D for the north and south Washington Avenue legs. This is an acceptable LOS that indicates moderate congestion where a driver can travel under free flow conditions during off peak hours, but moderate delays at controlled intersections are expected. The existing LOS values shown in Figure 11 do not indicate a need for capacity improvements at this time.

While no capacity improvements are needed at this time, the north and south legs of the Washington intersections with 4th and 12th Streets are very close to being LOS E which indicates traffic volumes have reached capacity and delays during the peak hour may be excessive. Section 5.4 on page 58 discusses future traffic volumes and capacity improvement needs.

3.7 Speed Limits

Speed limits in Emmett range from 55 mph on Highway 16 to 20 mph in school zones throughout the City. Of the 281 total crashes from 2009 to 2014, only three had contributing circumstances reported as exceeding the posted speed limit. At this time the crash data does not show any areas or corridors that warrant speed limit studies, nor do City officials believe there are any areas that need a speed limit study.

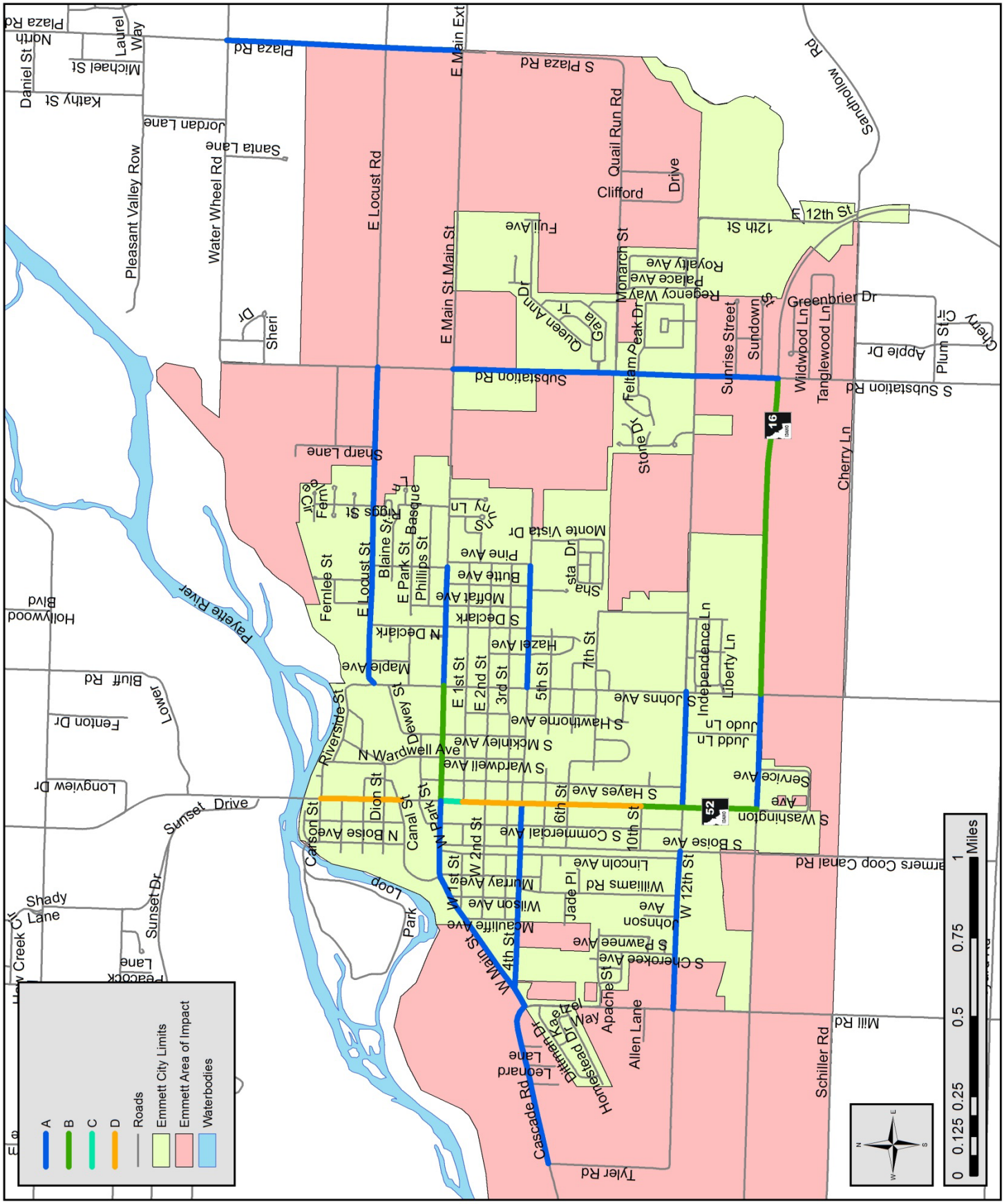

Figure 12 - Existing LOS

3.8 Crashes and Safety Experience

Crash data in GIS and tabular form for 2009 through 2014 was obtained from ITD. This data is typically received by ITD from crash reports filed by Idaho State Patrol, local sheriff's offices, and municipal police departments. The data was imported into a GIS program to identify intersections and roadway segments with a high frequency of crashes.

Over the six-year period there were a total of 281[2] crashes reported within the City of Emmett, including on state highways. Crash injury types are summarized in Table 7 below.

Table 7 - Crash Injury Summary

Injury Severity	Description	Number of Occurrences
Fatal	Fatality/Death	2
A Injury	Serious (incapacitating) Injury	13
B Injury	Visible (non-incapacitating) Injury	51
C Injury	Possible Injury	58
Property Damage Report	Property Damage Only	157
	Total:	**281**

Fatal injuries are any injury that results in the death of a person within 30 days of the crash in which the injury was sustained. Serious/incapacitating injuries (Type A) are any injury, other than fatal injuries, which prevents the injured person from walking, driving, or normally continuing the activities the person was capable of performing before the injury occurred. Visible injuries (Type B) include any injury, other than fatal or incapacitating injuries, which is evident to the observers at the scene of the crash in which the injury occurred. Possible injuries include any injury reported or claimed which is not a fatal, incapacitating, or non-incapacitating, evident injury.

Both fatal crashes occurred in 2009. One was described as an ATV overturning contributed to drunk driving. The other fatal crash was described as a head-on turning collision contributed to failure to yield. Because both fatal crashes were isolated incidents occurring where no other crashes were reported and because of the contributing circumstances, no further analysis was conducted.

The most common type of crash event over this six-year period was a rear-end crash, and the most common type of contributing circumstance was inattention.

Of the 279 crashes, 255 (91.4%) were intersection related, or occurred within a distance of 250 feet of an intersection (hereafter referred to as intersection related crashes). Approximately 55% of the intersection related crashes occurred along the Washington Ave and S Johns Ave corridors. Of the approximately 360 road intersections in the City, 71% of them did not experience a crash. The S Johns Avenue and Highway 16 intersection had the most crashes with a total of 19, followed closely by the South Washington Avenue

[2] 281 crashes were reported by ITD, but between 5 and 10 appear to be outside of Emmett City Limits; none of these were serious injury crashes. Given that coordinates for crash locations are approximate, and because of the relatively small number of crashes that appear to be outside of City Limits, they were considered statistically insignificant and were included in analysis.

and Highway 16 intersection which had a total of 17 crashes. These and other high-frequency crash intersections are discussed in Chapter 6 beginning on page 62.

Five serious injury crashes occurred outside of the high-frequency crash intersections mentioned above. Four of these five serious injury crashes were contributed to human error including drunk driving, inattention, speeding too fast for conditions, and failure to yield. The failure to yield circumstance contributed to a crash involving a bicyclist who was crossing Washington Avenue mid-block where no crosswalk was present. The remaining crash (a head on collision) had no contributing circumstance reported but the road surface was reported as icy. It could be inferred that the icy conditions caused the vehicle to encroach into the other lane and impact an oncoming vehicle. Due to the nature of these crashes and their relative isolation in terms of causes and events, no further analysis was conducted.

Other than the high-frequency crash locations discussed in Chapter 6, no discernable patterns for crashes have been identified. As discussed above, most of the serious injury and fatal crashes were relatively isolated incidents contributed by factors that cannot be controlled. In terms of overall safety, Emmett's transportation system is relatively safe. Figure 13 shows the number of crashes and type of crash over a five-year period.

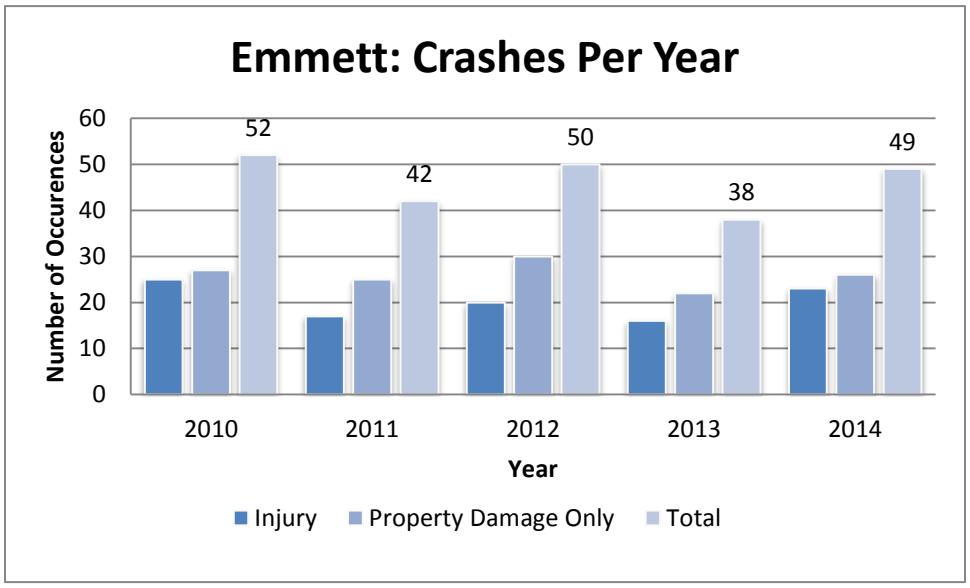

Figure 13 - Annual Crash Statistics for Emmett

While there was a fairly significant increase in crashes from 2013 to 2014, the number of crashes in Emmett is still relatively small; any change to the number of crashes will result in a significant percent change. The number of crashes in Emmett each year remaining constant is consistent with the trend for the State of Idaho, which has also remained fairly constant.

Figure 14 on page 28 shows a map of crashes from 2009 through 2014 color-coded to crash type. Where multiple crashes occur at a single point, the most severe crash appears on top.

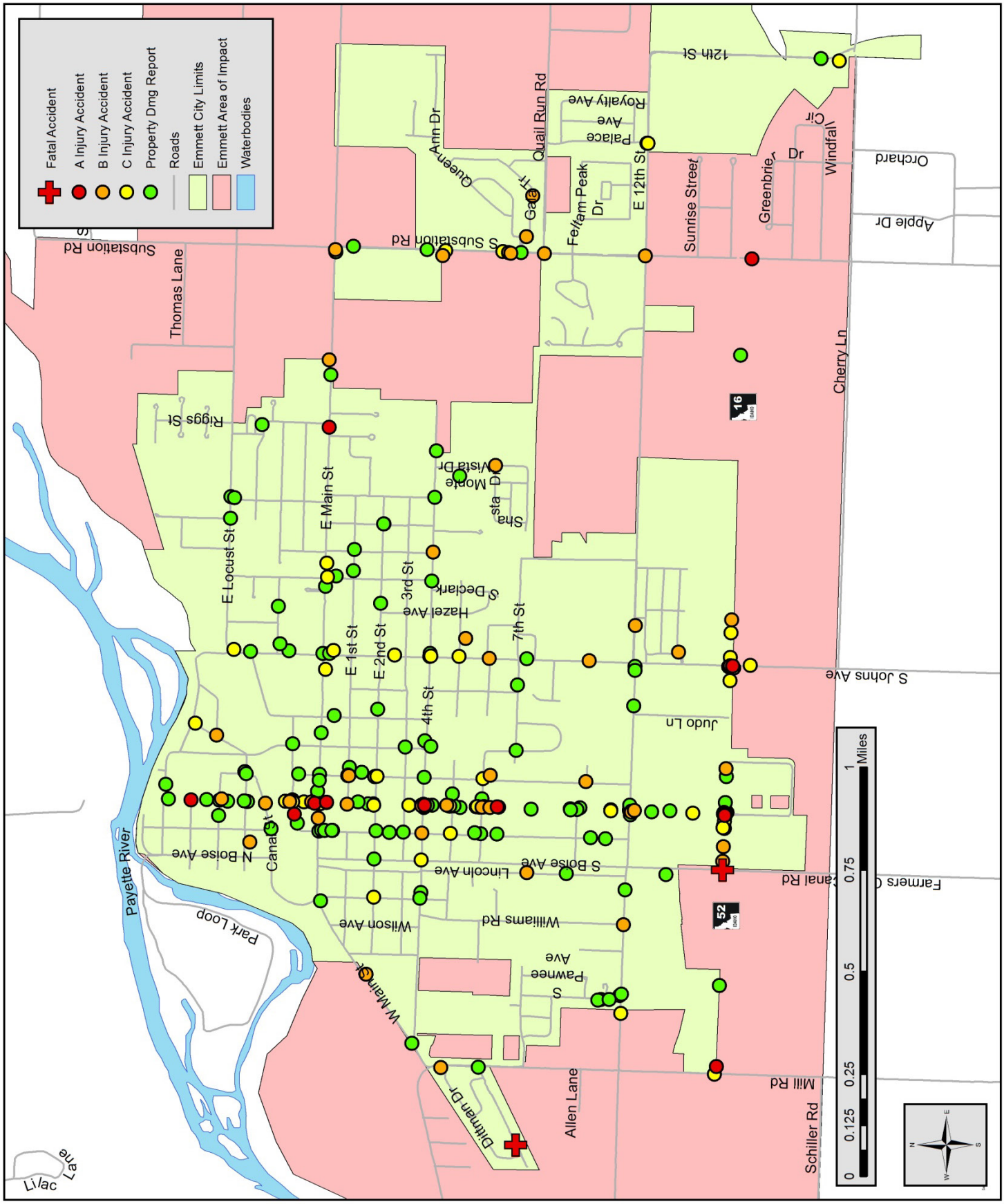

Figure 14 - Crash Locations and Type (2009-2014)

Chapter 4 - Asset Management

An asset management plan is a strategic and systematic process for operating, maintaining, upgrading, and expanding an organization's infrastructure with the goal of maintaining a set standard. In terms of transportation, pavement is typically the most valuable asset an agency possesses, after city personnel. That being said, one of the most important programs an agency can implement is a pavement management plan that enables its leadership to make informed decisions on how to allocate resources to best maintain its assets.

The asset management plan detailed in this document involves Emmett's pavements and signs. Emmett's management programs are facilitated through iWorQ, a web-based platform that provides a mapping application with tools for inventory, data collection, inspection, and data management. The actual analysis in this report was produced using Transportation Asset Management Software (TAMS), a software program produced by the Utah Local Technical Assistance Program (LTAP – similar to Idaho's LHTAC) at Utah State University. TAMS functions essentially the same as the iWorQ program, but it is used by Keller Associates in conducting pavement analysis because it offers more in-depth analysis functions.

4.1 Target Goals for Transportation Assets

Asset management plans outlined in this chapter target standards and goals. Targeted goals for pavement utilize the concept of remaining service life (RSL), a value of 0 to 20 years, which is explained further in the following sections. For most road departments and municipalities in Idaho, a system-wide average RSL of 10 to 12 years is recommended, with less than 3% of the network at a terminal service level (RSL 0 to 3 years). This recommended RSL distribution is illustrated in Figure 15 below. Section 4.2 explains pavement maintenance and management strategies to achieve a targeted RSL.

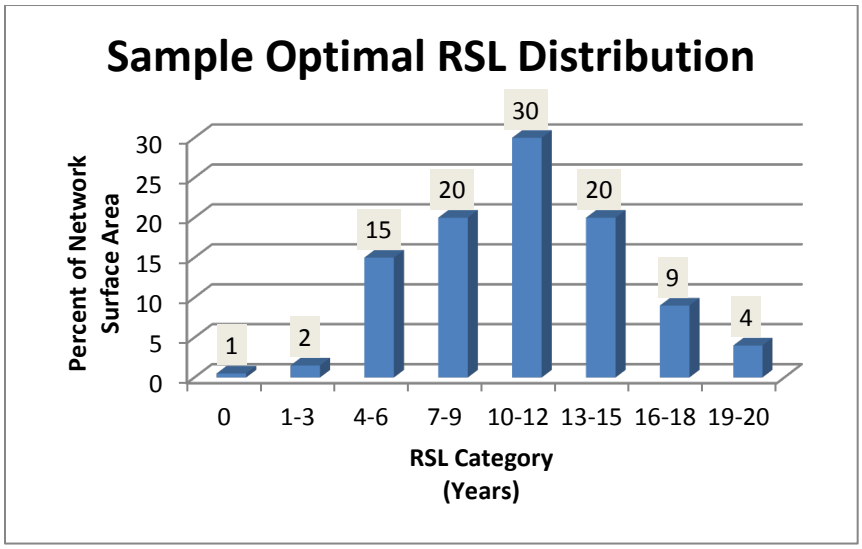

Figure 15 - Acceptable RSL Distribution

Traffic control signs in Emmett should be inspected annually. Signs with a condition rating of fair, poor, or replace should be replaced with new, MUTCD-compliant signs. Sign supports should be repaired and

replaced as necessary and as soon as they are identified as deficient. A sign inventory was completed as part of this project and the collected data was provided to the city. Sign replacement recommendations are outlined in Section 4.3.

4.2 Pavement Management

A Pavement Management Program (PMP) consists of the evaluation of existing pavement structures to determine their condition, predict future deterioration, and determine the type of work required to maintain or improve pavements cost effectively. To be used effectively, the PMP must be used in conjunction with good engineering judgment.

4.2.1 Pavement Inventory and Condition Survey

A database of road inventory data for roads Emmett owns and maintains was created during past planning efforts. The inventory and condition data were updated by Keller Associates personnel after conducting field inspections. The street network is broken into several management segments, and each segment has a unique identification number in the database.

Segments are homogenous management units allowing for a comprehensive inventory with respect to physical features (width, length, surface type, etc.). Segments in Emmett are generally block to block. The GIS map enables a user to select a road segment and view its associated data.

A pavement condition survey consisting of a visual inspection was conducted in May 2014 by Keller personnel. Each street segment was inspected and its inventory information was updated. Figure 16 on page 31 illustrates the typical inventory information collected for each pavement segment as found in iWorQ.

There are several methods to evaluate pavement condition. Distress types observed in Emmett were rated based on the Strategic Highway Research Program (SHRP) Distress Identification Manual published by Federal Highway Administration (FHWA), which is a leading resource for pavement condition surveys. This is the rating system utilized by iWorQ and TAMS pavement management software.

The rating system uses a matrix format that scores the severity of the distress against the extent of the distress. Extent is determined by the amount of road surface area which is affected by the pavement distress. Low extent typically means the distress appears in less than 10% of the segment. Medium extent means the distress appears in 10-30% of the segment. High extent generally means the distress is present in 30% or more of the segment.

Severity refers to how far the cracking has progressed, and is often a function of the crack width. For example, a low severity crack is less than ¼ in. wide; a medium severity crack is between ¼ and ¾ in. wide; and a high severity crack is more than ¾ in. wide. A copy of the asphalt distress rating sheet (found in Appendix G) shows the distress types and their corresponding rating matrices. More information on the various distress types is discussed in Section 4.2.2 beginning on page 32.

TAMS and iWorQ use the results of the condition survey to assign each road segment a remaining service life (RSL). RSL is a value between 0 and 20 that predicts the number of years the pavement has before it reaches the end of its useful service life and requires reconstruction to restore it to a new condition. Based

on the RSL and the distress that caused the RSL, a maintenance action or treatment is recommended by the software.

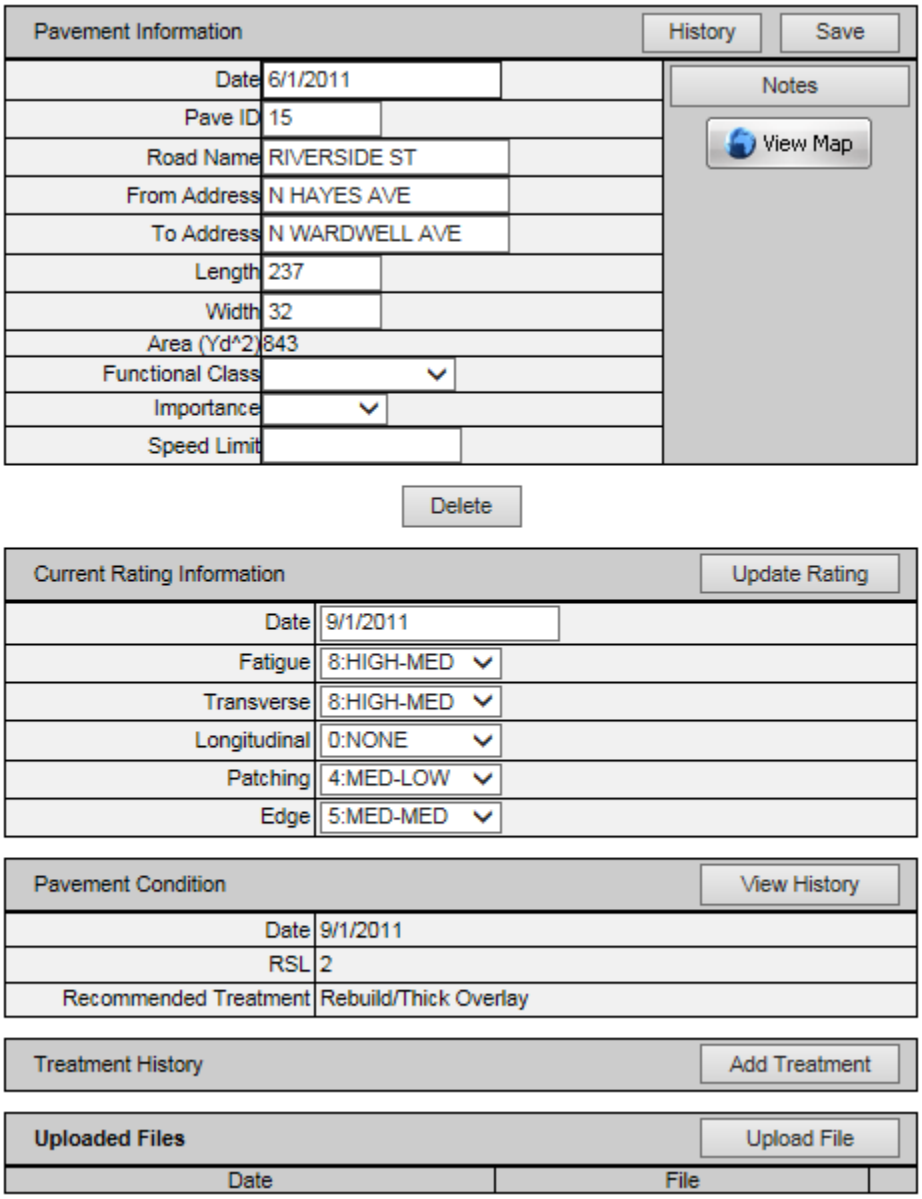

Pavement Information | History | Save

Date	6/1/2011
Pave ID	15
Road Name	RIVERSIDE ST
From Address	N HAYES AVE
To Address	N WARDWELL AVE
Length	237
Width	32
Area (Yd^2)	843
Functional Class	
Importance	
Speed Limit	

Notes

View Map

Delete

Current Rating Information | Update Rating

Date	9/1/2011
Fatigue	8:HIGH-MED
Transverse	8:HIGH-MED
Longitudinal	0:NONE
Patching	4:MED-LOW
Edge	5:MED-MED

Pavement Condition | View History

Date	9/1/2011
RSL	2
Recommended Treatment	Rebuild/Thick Overlay

Treatment History | Add Treatment

Uploaded Files | Upload File

Date	File

Figure 16 - Typical iWorQ Pavement Inventory Data

4.2.2 Types of Pavement Distress

Below is a discussion of the major types of pavement distresses, including typical causes and repair options. More in-depth information can be found in the SHRP Pavement Distress Identification Manual.

Fatigue Cracking

Fatigue cracking occurs in areas subjected to repeated traffic loadings such as in the wheel path. Such wear usually results in a series of interconnected cracks that in later stages will resemble a chicken wire or alligator pattern. Some common causes of fatigue cracking are loss of base support due to poor drainage, increased heavy traffic loading, inadequate structural design, or poor compaction during construction. Due to the failure of the underlying base layer, repair by crack sealing or seal coating is generally ineffective. Fatigue cracking can be repaired by excavating localized areas and replacing the base and sub-base. Large areas of distress require reconstruction of the entire road segment. Improvements to drainage should also be considered during repair.

Longitudinal Cracking

Longitudinal cracks are parallel to the pavement centerline. Centerline or lane cracks are caused by inadequate bonding during construction. They usually start as hairline cracks and widen and erode with age. Longitudinal cracks in the wheel path indicate they may actually be fatigue cracks (see above). If caught early when the severity is low, crack sealing is an excellent repair option. However, if not addressed early they will continue to ravel, widen, develop into multiple cracks, and allow moisture to penetrate and weaken the base and sub-base.

Transverse Cracking

Transverse cracks are perpendicular to the pavement centerline. They are often regularly spaced and generally caused by movement due to temperature changes and hardening of the asphalt with age. They usually begin as hairline cracks that are widely spaced (over 50' apart). Similar to longitudinal cracks, they will continue to ravel and widen with age and should be treated early by crack sealing.

Block Cracking

Block cracks are interconnected cracks that divide the pavement up into rectangular pieces. Larger blocks are generally classified as longitudinal and transverse cracking. Closer spacing indicates more advanced aging caused by shrinking and hardening of the asphalt over time. Possible causes are usually due to the inability of the asphalt binder to expand and contract. Low severity cracks can be repaired by a crack seal. High severity cracks require a mill and overlay for repair.

Potholes and Utility Cuts

Potholes are small bowl-shaped depressions in the pavement surface that penetrate all the way through to the base course. Most usually occur on roads with thin asphalt surfaces and seldom occur on roads with 4" of asphalt or greater. Generally, potholes are the end result of fatigue cracking often combined with poor drainage. As fatigue cracking becomes severe, small chunks of pavement begin to break away creating the pothole. Utility trenches that exhibit signs of settlement are also a pavement distress. Poor compaction of the trench backfill is usually the underlying cause. Potholes and utility trenches can be repaired by patching, however when the distress becomes extensive, reconstruction is usually the recommended treatment.

Edge Cracking

Edge cracking is the formation of crescent-shaped cracks near the edge of the road. It is caused by lack of support of the road edge, and is sometimes due to poorly drained or weak shoulders. If left untreated, additional cracks will form until it resembles alligator cracking. The appropriate treatment for edge cracking depends on its severity and extent. If caught in the early stages, crack sealing can be very effective. Once the damage has progressed, an overlay or reconstruction becomes necessary.

Rutting

Rutting is a surface depression in the wheel path. There are two basic types of rutting; pavement rutting and subgrade rutting. Pavement rutting is usually the result of insufficient compaction during construction. If not compacted enough initially, the pavement will continue to densify under traffic loads. Subgrade rutting occurs when the subgrade fails due to settlement or lateral movement. In this case, the pavement settles into the subgrade ruts causing the surface depression in the wheel path. The method of repair depends on the type of rutting. Severe pavement rutting should be repaired by a mill and overlay. Subgrade rutting can only be repaired by replacing the entire pavement and failed base.

4.2.3 Summary of Observed Conditions

Emmett maintains a total of 38.4 centerline miles of roads, all of which is paved except for approximately 583 feet (parts of Oxley Road and Barton Street). Past road work has primarily consisted of patching, crack and chip sealing, occasional overlays, and reconstruction. Based on the observed conditions, Emmett's roads were in overall fair condition in 2014 with a network average remaining service life of 8 years. A map color-coded to pavement condition is found in Figure 18 on page 35. The pavement software also recommends an optimal treatment or maintenance action depending on a segment's RSL and the governing distress that caused the RSL. Figure 19 on page 36 shows the recommended treatments as of 2014. It is important to note that these treatments are valid for a short time, typically around 2 years, after which the pavement condition will deteriorate and more extensive actions such as rehabilitation or reconstruction may be required. A tabular summary of existing RSL and recommended treatment is included in Appendix H.

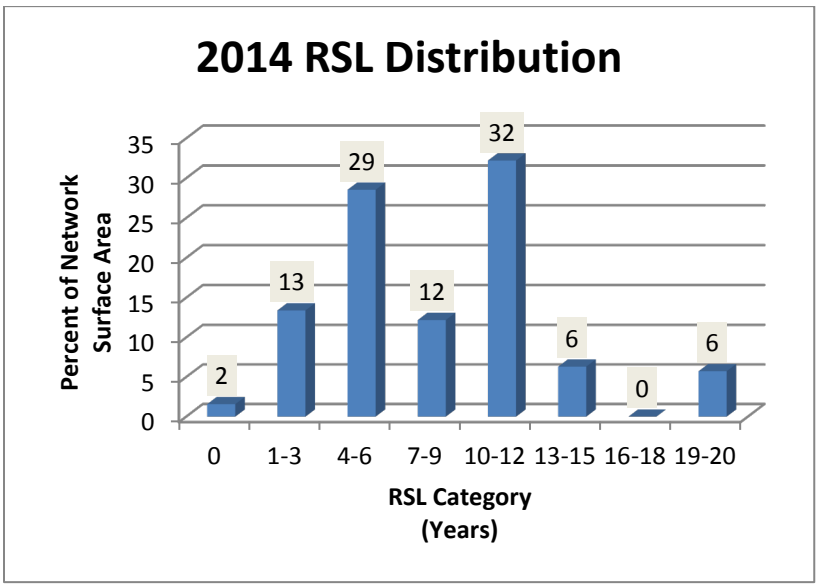

Figure 17 - 2014 Network Average RSL Distribution

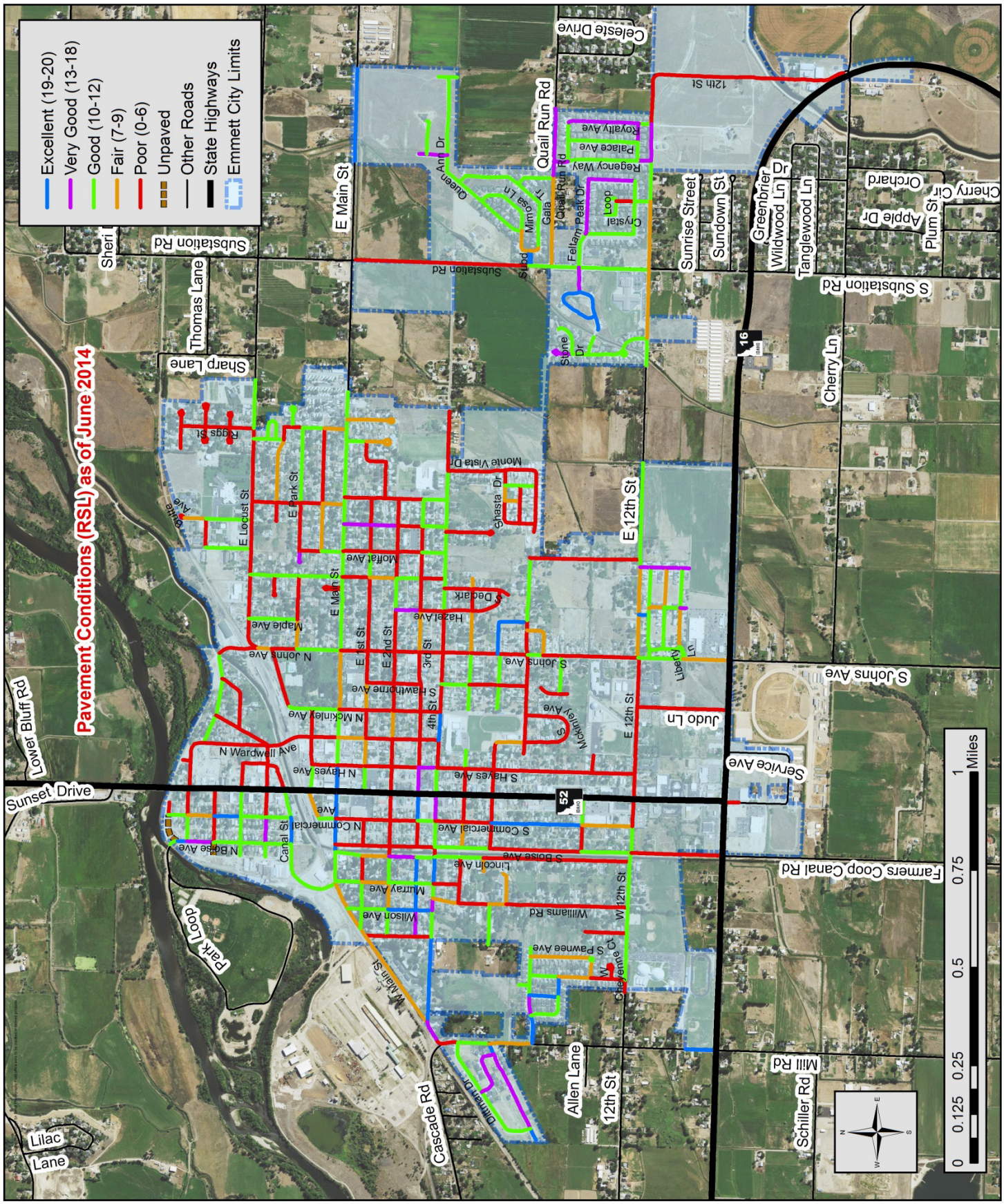

Figure 18 - 2014 Pavement Condition

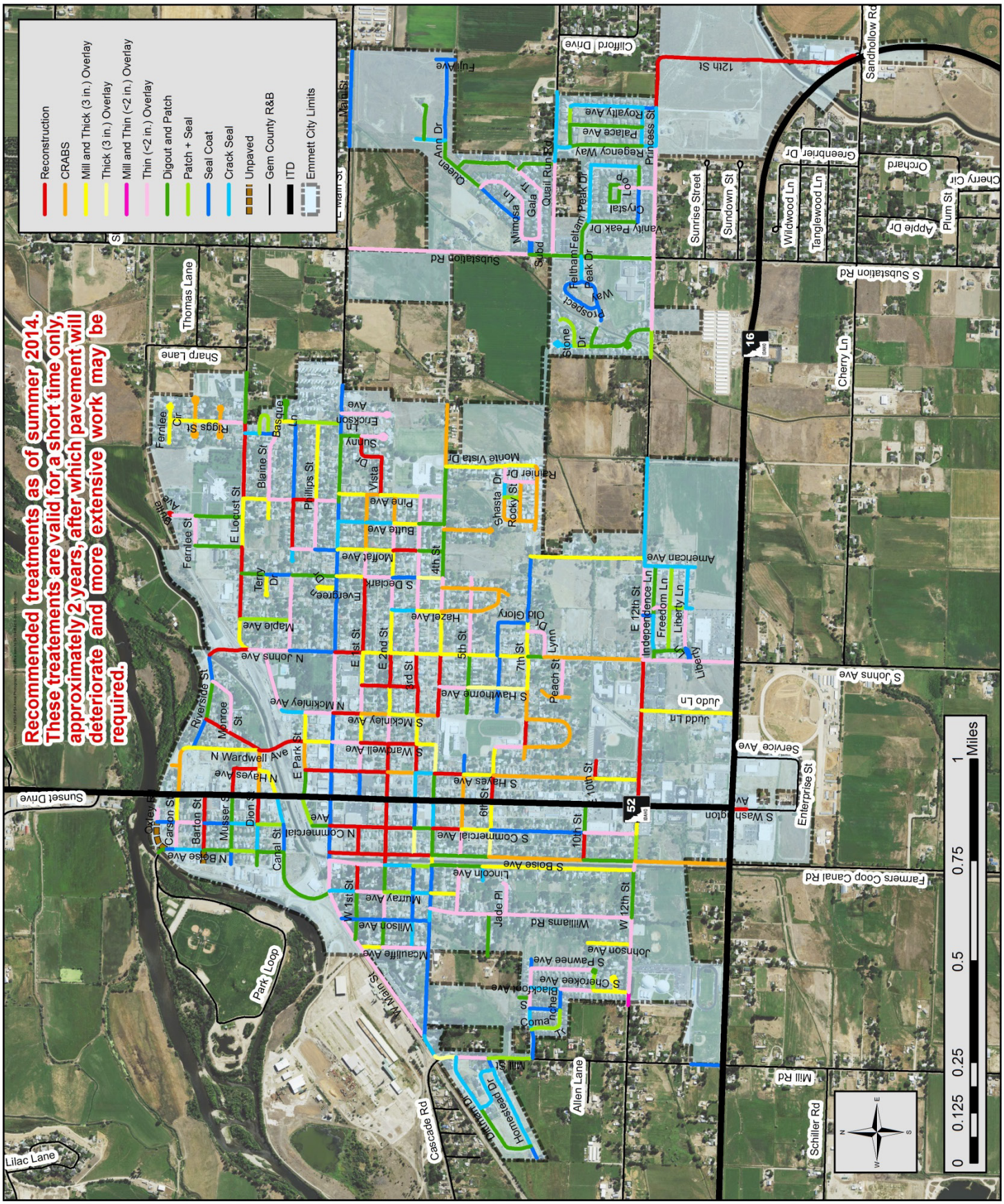

Figure 19 - Recommended Pavement Treatments

4.2.4 Pavement Management Philosophy

As discussed in Section 4.2.1 the pavement management software determines RSL and recommends a treatment based on the distresses present in a particular road segment. The critical challenge in managing a pavement network is timing routine and preventative maintenance, rehabilitation, and reconstruction to achieve the best condition and longest useful life at the lowest cost.

Most new asphalt pavements will deteriorate to a "good" condition category after about 8 years (RSL 12). This corresponds to a drop in the service life of the pavement of 33% and is the optimal time to apply preventative maintenance. After 12 years (RSL 8), most asphalt will deteriorate to a "fair" condition rating. This corresponds to a 60% drop in pavement life and is the optimal time to consider rehabilitative treatments. If no rehabilitation is undertaken at this point, the street will likely deteriorate to the "poor" category within another three years (RSL 5). Cost comparisons show reconstruction strategies cost three to five times more than rehabilitation strategies. The cost of preventative maintenance is about one-third the cost of rehabilitation strategies, or one sixth the cost of reconstruction.

Figure 20 is a generic pavement performance chart from FHWA which illustrates the idea behind pavement maintenance. The main curve maintains a downward trend over the life of the pavement indicating a deteriorating condition. By performing preventative maintenance early on in a pavement's life or once it has been restored to a like-new condition, the useful service life can be cost-effectively extended. The condition increases when a preservative treatment is applied, (vertical "jump" in condition) then the curve begins to deteriorate again. Another preventative treatment is applied at a later time, and the condition is once again improved ("jumps" again). It is important to note that preventative maintenance will generally not extend the life of a pavement indefinitely; the drop in quality after the third iteration on the curve is lower than after the first two.

If maintenance is deferred, the pavement will deteriorate more rapidly, and the cost of bringing the pavement back into a good condition will increase. It is more cost effective to "**keep good roads good**" than to let them deteriorate to a point where expensive rehabilitation or reconstruction is required.

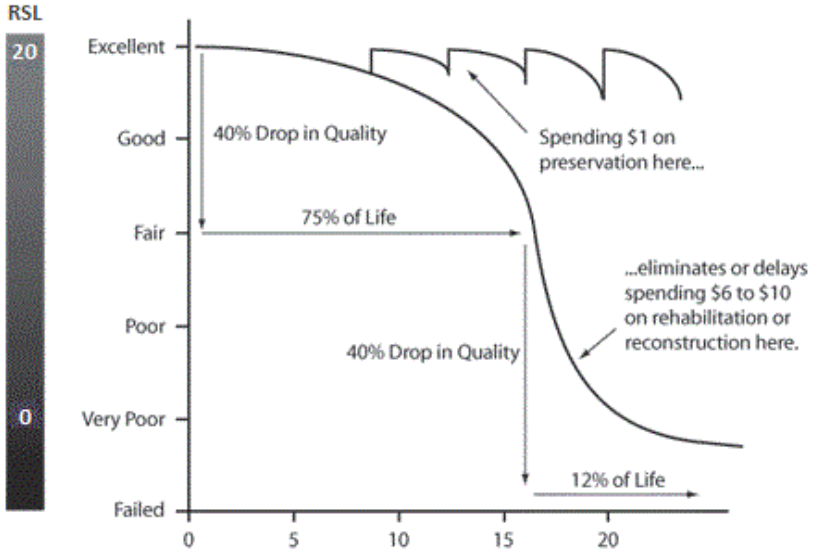

Figure 20 - Pavement Life Cycle

To help determine what treatment to apply at what time, a maintenance performance chart such as that shown in TABLE is useful. The chart was originally developed by the Utah LTAP center and is provided with its TAMS program. This chart lists various treatments and the expected gain in RSL when applied to a pavement in a given condition. Emmett should use this chart when deciding what type of maintenance to perform. The costs shown have been either calculated using 2014 Average Unit Price Reports from ITD,

taken from local agencies in Idaho, or were obtained from the Utah LTAP center. Emmett can develop its own unit costs to provide more accurate planning estimates.

Table 8 - Maintenance Performance Chart

Treatment Type	Maint. Category	Cost	0	1-3	4-6	7-9	10-12	13-15	16-18	19-21
Crack Seal	Routine	**$0.35**	0	0	0	0	1	2	3	2
Cold Patch	Routine	**$0.30**	0	0	0	0	0	0	0	0
Digout and Hot Patch	Routine	**$0.45**	0	0	0	0	0	0	0	0
High Perf. Cold Patch	Routine	**$0.60**	0	0	0	0	0	0	0	0
Fog Coat	Routine	**$0.45**	0	0	0	1	1	2	2	2
High Mineral Asphalt Emulsion	Preventative	**$1.20**	0	0	0	1	2	3	5	5
Sand Seal	Preventative	**$0.65**	0	0	0	1	2	2	2	2
Scrub Seal	Preventative	**$1.00**	0	1	3	5	5	5	5	5
Single Chip Seal*	Preventative	**$2.64**	0	1	3	5	5	5	5	5
Slurry Seal	Preventative	**$1.75**	0	1	3	5	5	5	5	5
Microsurfacing (Type II)**	Preventative	**$2.70**	0	2	3	5	7	7	7	7
Plant Mix Seal	Rehabilitation	**$5.60**	0	3	4	5	7	7	7	7
Cold In-place Recycling (2 in with chip seal)	Rehabilitation	**$5.00**	0	3	4	5	6	7	7	7
Thin Hot Mix Overlay (<2 in)*	Rehabilitation	**$7.10**	0	4	6	7	7	7	7	7
HMA (leveling) & Overlay (<2 in.)	Rehabilitation	**$8.00**	0	4	6	8	8	8	8	8
Hot Surface Recycling	Rehabilitation	**$5.00**	0	3	5	7	8	8	8	8
Rotomill & Overlay (<2 in)*	Rehabilitation	**$7.99**	0	4	7	8	8	8	8	8
Cold In-place Recycling (2/2 in.)	Reconstruction	**$10.30**	15	15	15	15	15	15	15	15
Thick Overlay (3 in.)*	Reconstruction	**$10.60**	12	12	12	12	12	12	12	12
Rotomill & Thick Overlay (3 in.)*	Reconstruction	**$11.49**	12	12	12	12	12	12	12	12
Base Repair\Pavement Replacement (CRABS)*	Reconstruction	**$14.82**	16	16	16	16	16	16	16	16
Cold Recycling & Overlay (3/3 in.)	Reconstruction	**$11.15**	14	14	14	14	14	14	14	14
Full Depth Reclamation& Overlay (3/3 in.)	Reconstruction	**$15.00**	20	20	20	20	20	20	20	20
Base/Pavement Replacement (3/6/12in.)*	Reconstruction	**$31.21**	20	20	20	20	20	20	20	20

Fit the current RSL into a category along the top row and then move downward to the applied treatment to find the additional RSL that will be achieved from the selected treatment.

*** Based on 2014 ITD Average Unit Price Report** **** From City of Pocatello using Valley Slurry Seal**

(2/2 in.) Means 2" overlay with 2" recycle (3/6/12) Means 3" HMA over 6" Road Base over 12" Base

4.2.5 Conditions Analysis

As previously discussed, it is generally accepted that a good road network has the following characteristics:

- Average RSL of road network is 10 years or greater
- Less than 3% of the system has 0-3 years RSL
- A bell-shaped distribution with the mean falling at or about 12 years RSL

The 2014 network average RSL for the City of Emmett's roads was approximately 8 years. Between 2014 and 2016, maintenance activities included chip sealing 12th Street from Johns Avenue to the Emmett High School and chip sealing W. Main Street from Mill Road to Farmer's Coop Canal Bridge (Boise Street). The portion of Johns Avenue between 4th and 12th Avenues is planned for reconstruction in 2020. The chip sealing on 12th and Main Streets and planned reconstruction of the portion of Johns Avenue represents only a small percentage of Emmett's whole pavement network and has little effect on the network's overall condition and therefore was neglected for the 2016 conditions. The 2016 RSL distribution is shown in Figure 21 on page 39.

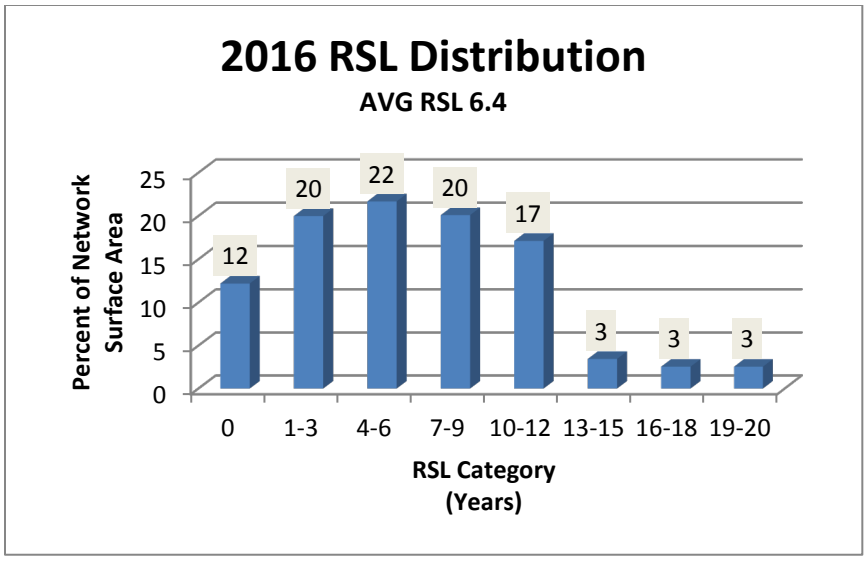

Figure 21 - 2016 Network RSL Distribution

Table 9 displays the same information along with corresponding subjective ratings of poor, fair, good, very good, and excellent.

Table 9 - 2016 Subjective Pavement Conditions

	RSL Category				
	Poor (0-6)	Fair (7-9)	Good (10-12)	Very Good (13-18)	Excellent (19-20)
Percent of System	53.89	20.11	17.13	6.00	2.55

This distribution indicates the current overall condition of Emmett's roads to be in "poor" condition with a network average RSL of 6.4 years. Approximately 22 percent of the network is at three years or less RSL. If no maintenance is performed in the next five years, over 71 percent of the entire street network is projected to have an RSL of 0-3 years in 2022; over 85 percent of the network will be in poor condition.

4.2.6 Maintenance Scenario Analyses

Emmett has spent various amounts on pavement preservation over the years. Emmett's Annual Road and Street Financial Reports from 2004 through 2014 were obtained from ITD and used to determine annual maintenance funding. Table 10 on page 40 summarizes the Annual Road and Street Financial Reports.

Table 10 - Annual Road and Street Financial Report Summary (2004-2014)

Year	New Construction	Reconstruction/ Replacement/ Rehab	Routine Maintenance	Yearly Total
2004	$ 20,187	$ 45,546	$ 7,776	$ 73,509
2005	$ 33,760	$ 3,716	$ 59,910	$ 97,386
2006	$ 3,561	$ 57,956	$ 73,953	$ 135,470
2007	$ -	$ 63,753	$ 50,099	$ 113,852
2008	$ -	$ 35,068	$ 11,880	$ 46,948
2009	$ 14,000	$ 4,039	$ 57,493	$ 75,532
2010	$ 26,974	$ -	$ 4,545	$ 31,519
2011	$ -	$ 428,445	$ 58,149	$ 486,594
2012	$ -	$ -	$ 52,731	$ 52,731
2013	$ -	$ -	$ 33,413	$ 33,413
2014	$ 103,706	$ -	$ 38,100	$ 141,806
			Yearly Average:	**$ 117,160**

Items used to calculate the dollar amounts in Table 10 include Roads; Bridges, culverts and storm drainage; Chip Sealing and seal coating; Patching; and Grading/blading line amounts. The average maintenance expenditure for the City of Emmett was calculated to be $117,160 per year.

This information was used to develop maintenance scenarios to aid in understanding the pavement conditions in Emmett. The maintenance scenarios that were analyzed include:

- Scenario 1: Current Funding Level
  - Assumed a $117,160 budget based on the 2004-2014 average expenditures
- Scenario 2: Ideal Maintenance Scenario
  - Increased annual budget to $1,842,343 to achieve recommended pavement network characteristics
- Scenario 3: $515,000 Funding Level
  - Target an annual budget of $515,000 for pavement management activities

Each scenario assumed maintenance activities would begin in year 2017. They apply different strategies over 5 years to determine the resulting RSL distribution in year 2022. These various scenarios are planning level projections and are useful in that they provide a ballpark number in terms of funding on pavement maintenance needs. These are planning-level estimates and should be used only for planning purposes. The unit costs shown in Table 8 on page 38 were used in the analyses. These costs should be used for planning purposes only.

4.2.6.1 Scenario 1: Current Funding Level

The "current" funding level of approximately $117K pear year will chip seal just over six percent of the pavement in Emmett. If all maintenance funding is applied towards chip seals over the next five years, the resulting network average RSL is projected to be 2.44 in year 2022 with an RSL distribution of that shown in Figure 22 on page 39.

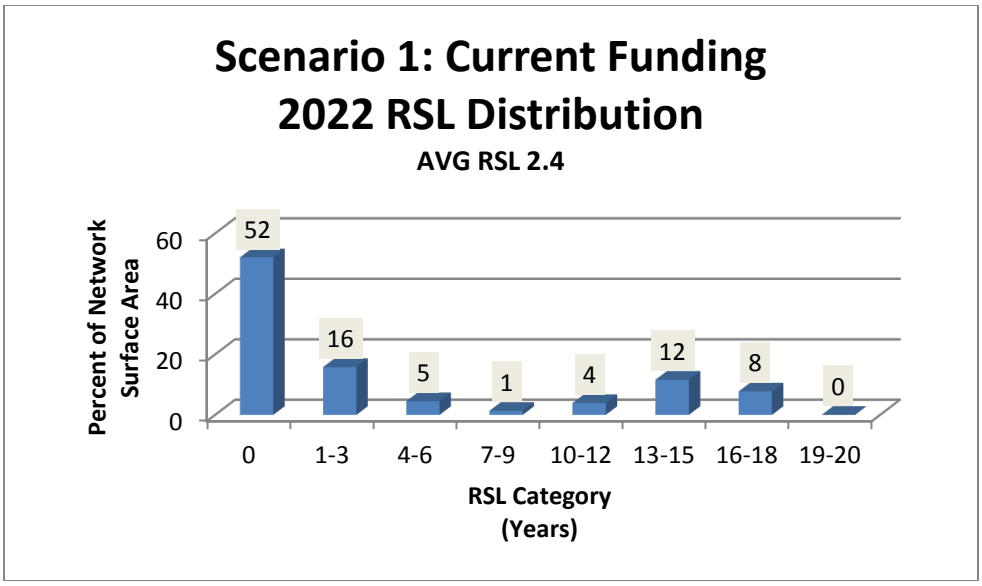

Figure 22 - Scenario 1: RSL Distribution for Year 2022

This indicates a significant burden on the City of Emmett; the vast majority of the road network would require reconstruction to be restored. This scenario illustrates the ineffectiveness of the current maintenance funding level.

4.2.6.2 Scenario 2: Ideal Funding Level

To determine the necessary funding to achieve desired network RSL distribution, analysis was performed. An annual budget of $1.88 million was used to achieve the RSL distribution shown in Figure 23.

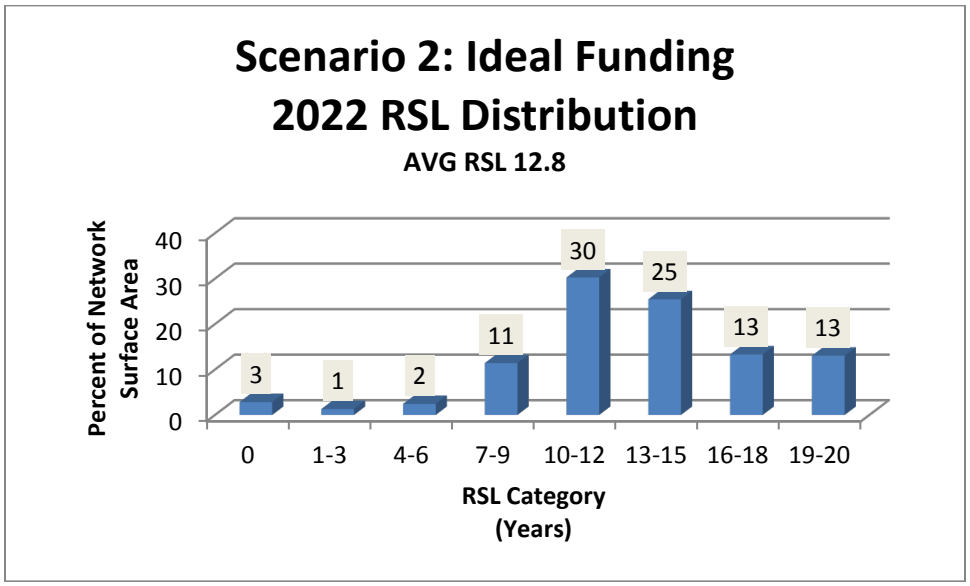

Figure 23 - Scenario 2: RSL Distribution for Year 2022

Scenario 2 assumes that each year 5% of the network is reconstructed, 5% receives a thick (3 in.) overlay, 5% receives a thin (<2 in.) overlay, and 5% is chip sealed. The distribution is skewed the right when compared to the recommended characteristics and there is roughly four percent of the network at a terminal service level. The annual funding level to accomplish this maintenance is $1,842, 343.

While a bell-shaped curve in the middle with the mean falling between 10 and 12 years is recommended, a skew to the right such as in this scenario is even better. It is extremely costly to achieve the recommended distribution when much of the road network is in poor condition; reconstructive and rehabilitation become the only effective pavement treatments and result in higher RSLs and a skewed distribution.

The funding levels required to achieve the results illustrated in Scenario 2 may be unrealistic. It is clear that increased funding is necessary to preserve and improve the pavement network.

4.2.6.3 Scenario 3: $515K Funding Level

A third pavement maintenance scenario utilizing approximately $515,000 annually was analyzed. Scenario 3 assumes that each year 4% of the network receives a cement recycled asphalt base stabilization (CRABS) which is a form of reconstruction, 2% receives a thin (< 2 in.) overlay, and 5% is chip sealed. After 5 years of this funding level applied toward the maintenance specified, the resulting RSL distribution is that shown in Figure 24 below.

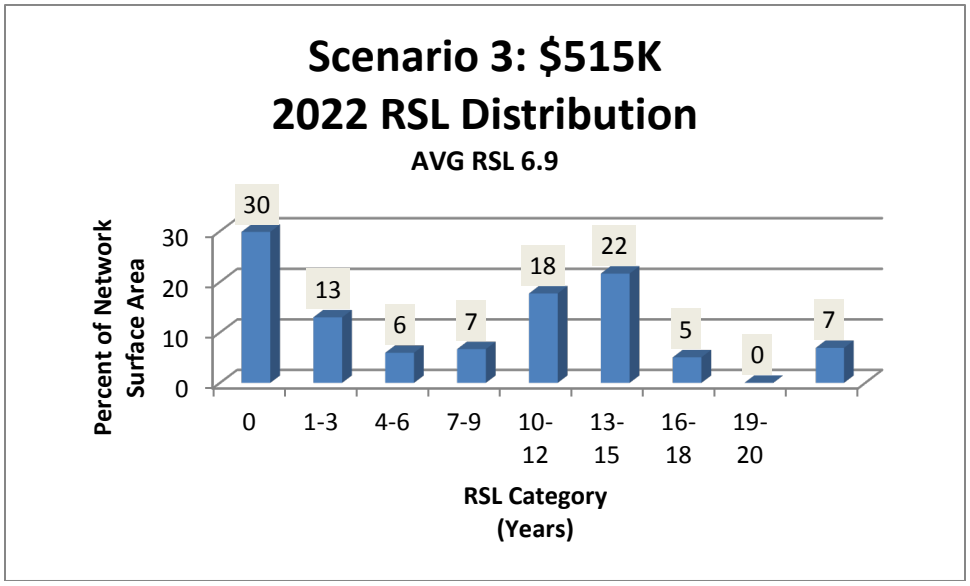

Figure 24 - Scenario 3: RSL Distribution for Year 2022

CRABS is a reconstructive technique that essentially results in a brand-new road but is about half the cost of full on reconstruction. Utilizing this, the City would be able to reconstruct more roads over time. Using this technique along with thin overlays and chip sealing, an RSL of seven years could be achieved after five years. There is still over half of the network in poor condition, but the amount is decreasing over time. Following this same maintenance strategy, the RSL distribution shown in Figure 25 on page 43 would be achieved.

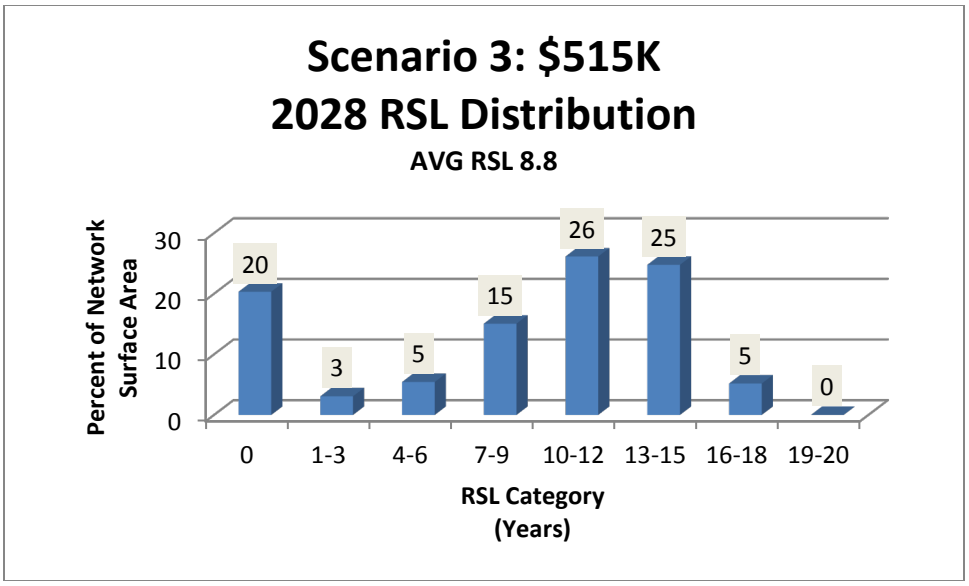

Figure 25 - Scenario 3: RSL Distribution for Year 2028

The RSL in year 2028 after following this maintenance strategy for 11 years is slightly less than 9 years. The amount of the network in poor condition is decreasing, and the distribution more closely resembles the recommended distribution. This level of funding is still a high amount, but may be more realistic and shows that over time the network can be improved.

4.2.7 Pavement Management Recommendations

While the previous analyses paint a rather bleak picture for Emmett, it is important to note that a road in poor condition (even with RSL 0) is still a usable road. Poor condition essentially means that the only cost-effective maintenance action is major rehab or reconstruction. Chip sealing a poor condition road is throwing money away. It is wiser to save the money that would be spent to seal coat a road in poor condition for several years and then reconstruct or do major rehabilitation when enough funds are saved.

There are many different treatments that can be utilized besides traditional chip seals, overlays, and total reconstruction. Reconstructive measures such as cement recycled asphalt base stabilization (CRABS) is half the cost of reconstruction and results in a brand-new road. This technique was utilized in Scenario 3.

Moving forward, it is recommended that Emmett focus its maintenance activities on keeping "good roads good." This means that roads currently in fair to good condition should be seal coated every five to seven years to maintain their current state. Roads in poor condition can be neglected until funding becomes available to be applied toward rehabilitation and reconstructive maintenance. The lack of maintenance funding is not unique to Emmett, virtually every public agency in Idaho faces funding shortfalls. Being smart with maintenance money and not deferring critical maintenance is crucial to extending the usefulness of every dollar. A map-book of city streets color-coded by pavement treatment has been provided to the city to assist in maintenance tasks.

4.3 Traffic Sign Management

A sign management system is a tool to cost effectively inventory, preserve, and improve the sign network. Such a system provides:

- A complete physical inventory of the sign network
- Condition survey
- A needs assessment process
- Compliance with Manual on Uniform Traffic Control Devices (MUTCD) requirements

As part of this Transportation Plan, Emmett's sign inventory was updated. The inventory resides in the iWorQ sign module. The module allows for a detailed inventory of the City's sign network including condition and treatment methods. It also utilizes GIS in the form of an electronic map that provides a visual tool in maintaining the City's sign network.

4.3.1 Inventory and Condition Survey

Keller Associates surveyors inventoried traffic sign installations in Emmett during August 2014. A support (post) was rated as follows:

- **Acceptable** if it was vertical and not bent, if the material of the support was in good condition, if the positioning of the support was correct, and if the support was secured safely.
- **Repair** was given if the sign support was leaning diagonally, and/or if the support was not safely fastened into the ground. This rating only applied if the support was not bent beyond repair, and if the material of the support (especially at the base) was not deteriorated.
- **Replace** if it was not positioned correctly, the condition of the material was considerably deteriorated, it was bent beyond repair, or the base attachment was irreparable.

The MUTCD establishes guidelines and standards for proper sign visibility, condition, and positioning in Rural and Urban locations. A traffic sign was rated as follows:

- **Excellent** if it appeared to be brand new or without any indication of chips, cracks, rust, bends, or fading.
- **Good** if it appeared to be in its original excellent condition, with the exception of occasional minor chips, cracks, rust, bends, and/or fading.
- **Fair** if chips, cracks, rust, bends, and/ or fading were apparent throughout the face of the sign, but not to the point where the sign was difficult to read or understand.
- **Poor** if the text, numbers, or objects on the sign were defaced to the point that the sign was slightly difficult to read due to its distressed condition.
- **Replace** if the text, numbers, or object on the sign were defaced to the point that it was difficult to read.
- **Missing** if a post was found but no sign was mounted.

These criteria coincide with MUTCD guidelines for cleanliness and daytime visibility. The condition survey did not evaluate the signs' compliance with MUTCD retroreflectivity standards which are explained in Section 4.3.2 on page 48. The findings of the inventory and condition survey are summarized in Table 11 and Table 12 below.

Table 11 - Traffic Sign Post Data Summary

Supports - 707		
	Total	% Inventory
Support Condition		
Acceptable	689	99.7%
Repair	12	1.7%
Replace	6	0.9%
Support Type		
2 in. Channel	40	5.7%
2x2 Steel	555	78.5%
3 in. Tube	58	8.2%
4x4 or 4x6 Wood	41	5.8%
Telephone Pole	2	0.3%
Other	11	1.6%

Table 12 - Traffic Sign Inventory Data Summary

Signs - 1257		
	Total	% Inventory
Sign Condition		
Excellent	9	0.7%
Good	999	79.5%
Fair	149	11.9%
Poor	65	5.2%
Missing	1	0.1%
Replace	34	2.7%
MUTCD Type		
Regulatory	532	42%
Warning	101	8%
Guide	563	45%
School	61	5%

Overall the sign network in Emmett is in good condition. The condition survey found 18 sign posts (supports) in need of repair or replacement due to leaning, or being bent or broken. One post with no signs mounted on it was found. Several posts are not compliant with MUTCD requirements such as offset from the traveled way or mounting height. The MUTCD does allow for variance when the normal requirements are impossible or difficult to meet, however. Again, this inventory only looked at the physical conditions of signs, rather than complete MUTCD compliance. It is assumed that as signs are upgraded or replaced they will be installed as per MUTCD requirements.

Figure 26 and Figure 27 on pages 46 and 47 show the locations of supports and signs, respectively. The location points are color-coded to the conditions described above. Where multiple signs are located at the same location, the worst-condition sign is visible on the map. A copy of the sign inventory can be found in Appendix I.

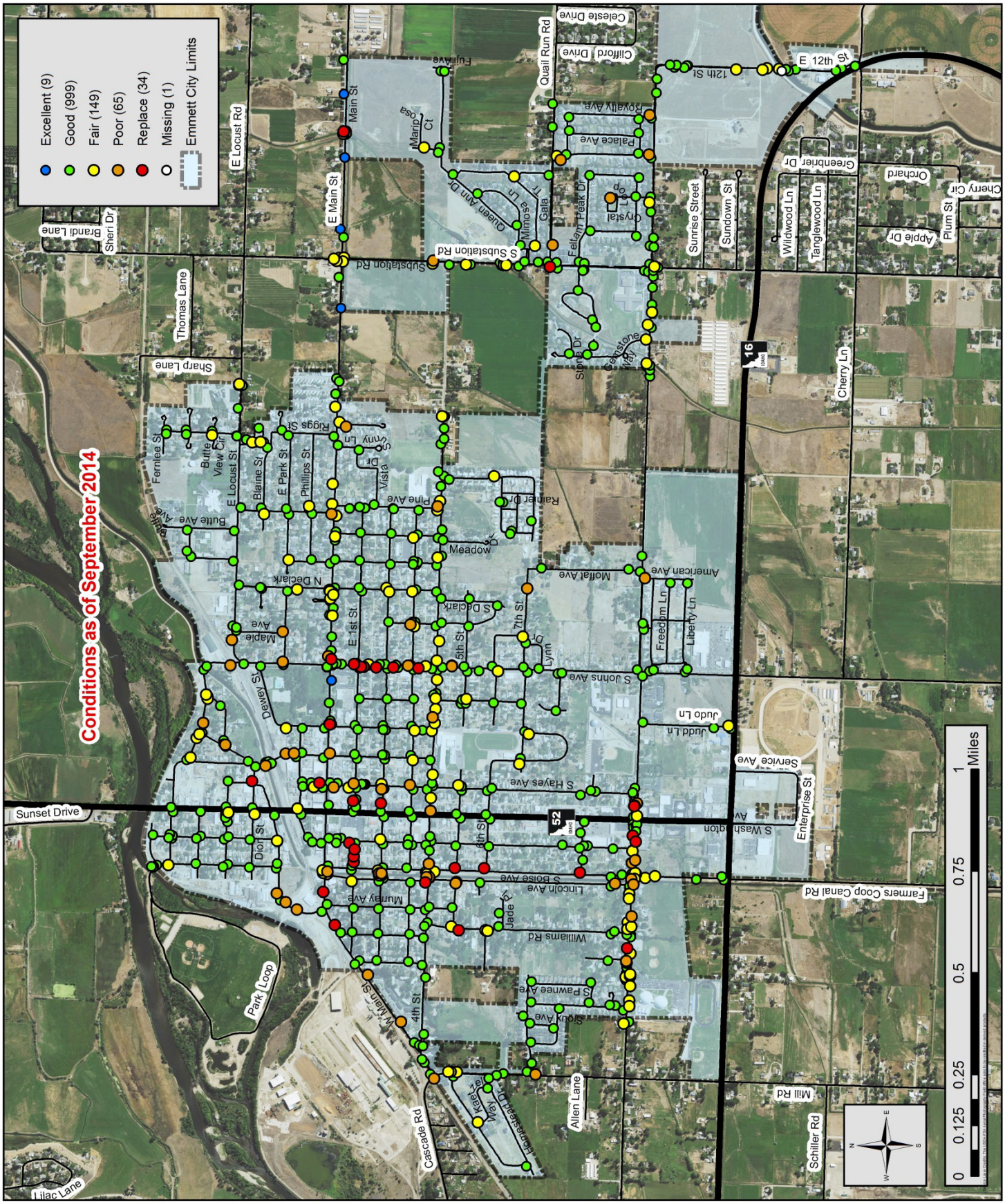

Figure 26 - Traffic Sign Conditions

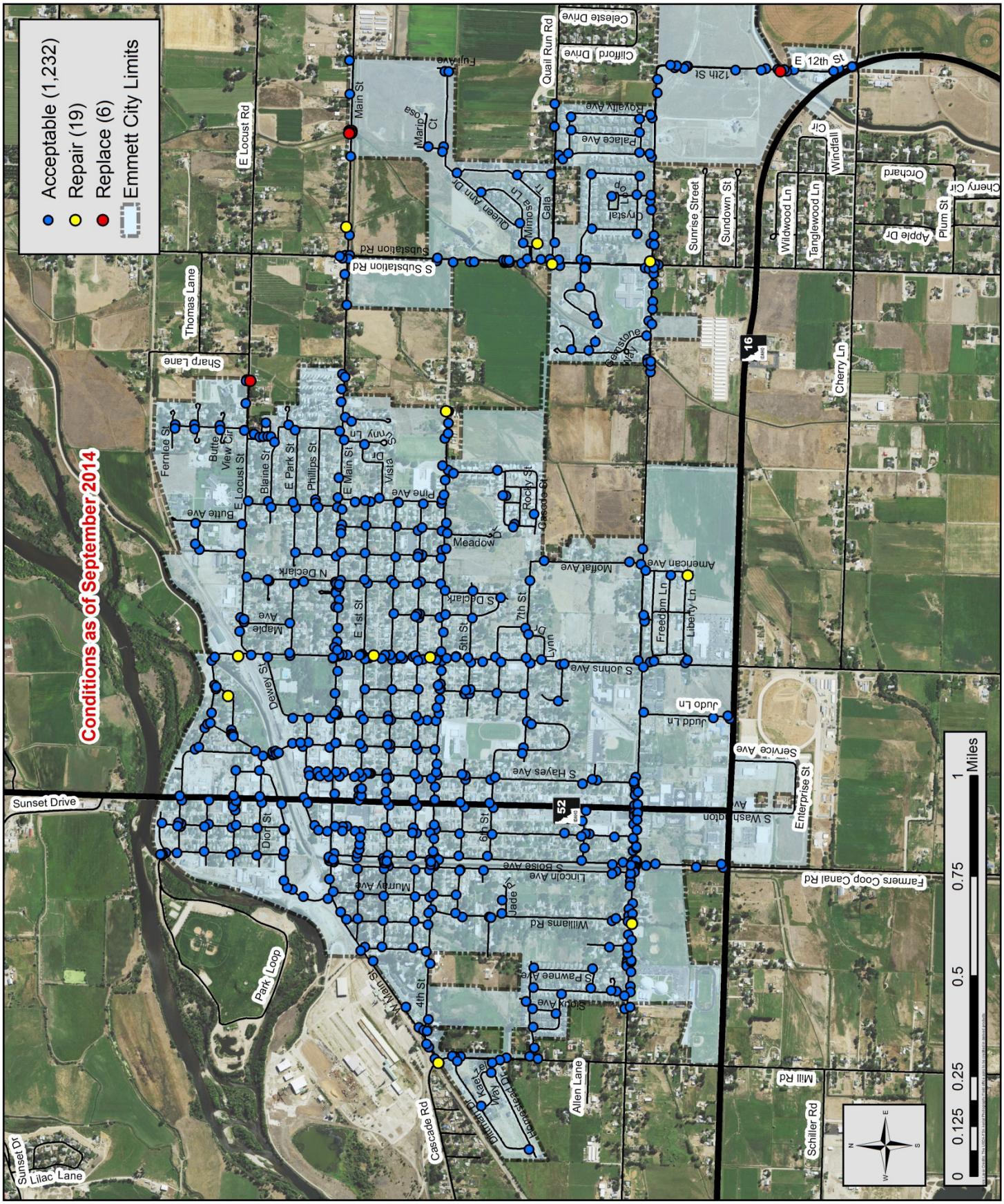

Figure 27 - Traffic Sign Post Conditions

4.3.2 MUTCD Retroreflectivity Requirements

New standards developed by the Manual on Uniform Traffic Control Devices (MUTCD) require that public agencies adopt a Sign Management Plan to ensure signs meet new minimum retroreflectivity requirements for traffic signs on public roads. Agencies must implement and continue to use a sign management program as of June 14, 2014. This date applies to regulatory and warning signs only. However, agencies are expected to replace guide signs (including street name signs) and other types of signs at the end of their normal service life.

The MUTCD outlines two basic assessment methods and three management methods of compliance:

- Measured Retroreflectivity - Assessment
- Nighttime Visual Inspection - Assessment
- Expected Sign Life - Management
- Blanket Replacement - Management
- Control Sign - Management
- Other Methods

Measured retroreflectivity can be taken by a retroreflectometer. A retroreflectometer can be costly to obtain, somewhere in the neighborhood of $9,000 and can range up to $15,000 when equipped with additional features such as GPS and bar code readers.

With the visual nighttime inspection method, a trained inspector conducting a visual inspection from a moving vehicle during nighttime conditions assesses the retroreflectivity of an existing sign.

With the expected sign life method, individual signs are replaced before they reach the end of their expected service life. The expected service life is based on the time required for the retroreflective material to degrade to the minimum level. The sign life can be based on several different sources of information such as sign sheeting warranties, the performance of control signs, or actual field measurements.

Blanket replacement is similar to the expected sign life method except that all signs grouped in a corridor or in an area are replaced at specific intervals. This eliminates the need to assess retroreflectivity or track the life on an individual sign. The replacement interval is based on the expected sign life.

With the Control Sign method, replacement of signs is based on the performance of a sample of control signs. The control sign might be located in a service yard or be located with a grouping of signs for a particular area. The control sign is monitored to determine the end of retroreflective life. All field signs represented by the control sign must be replaced before the control sign reaches minimum retroreflective levels.

Other methods developed based on engineering studies can be used. Refer to Appendix J for a FHWA published handout for more information on maintaining retroreflectivity.

4.3.3 Signage Recommendations

Emmett has 1,257 signs on 707 supports. It is recommended that an annual spring inspection of Emmett's signs be conducted. 54 signs were found to be at least partially obscured due to tree or bush overgrowth. This is a fairly common issue with traffic signs. Preventing sign overgrowth is an important maintenance task that can be easily overlooked or not noticed. Any overgrowth should be identified and trimmed back during the annual sign inspection. Emmett should adopt one of the sign management methods outlined in the MUTCD to ensure signs have adequate retroreflectivity.

While many signs and supports are in good condition, those rated as fair, poor, repair, or replace should be replaced and brought into MUTCD compliance as a first priority. New signs should be adequately retroreflective. Any time work is performed on signs or posts, the inventory should be updated including the date when the new sign or post was installed. Maintaining the inventory data is crucial to having an effective management plan.

Recent changes to the MUTCD provide text size requirements for street name signs (MUTCD Section 2D.43). Requirements are based on the speed limit of the road the sign serves, as shown in Table 13 below. Most street name signs in Emmett appear to be consistent; however, many probably do not meet retroreflectivity standards established by the MUTCD.

Table 13 - MUTCD Street Name Sign Text Size Requirements

Street Speed Limit (mph)	Upper-Case Minimum Height (inches)	Lower-Case Minimum Height (inches)
25 or less	4	3
25 to 40	6	4.5
40 or greater	8	6

It should be noted that existing signs are not required to be replaced because of noncompliance with the new text size requirements; however, new signs and signs at the end of their service life being replaced must have the new letter sizes. If a blanket replacement of all signs in Emmett is undertaken, the new D3 street name signs should comply with these MUTCD requirements.

The sign inventory also found six "SLOW – CHILDREN AT PLAY" signs in Emmett. It is recommended that these signs be removed. The signs are found in some municipalities and are intended to promote safety; however, they are not recognized by the MUTCD or ITD. In fact, several states ban the use of such signs altogether. There are many reasons why such signs should not be permitted. A few reasons include (Sources: FHWA and Wisconsin Department of Transportation):

- "SLOW CHILDREN AT PLAY" signs are typically designed to look like warning signs (yellow background, black legend)
    - Warning signs warn drivers of hazards at specific locations (curve, pedestrian crossing, etc.) but Slow Children signs do not specify a location
- If installed in one area and not another, drivers may be led to believe that there are no children in areas without signs, thus making children more vulnerable

- Parents and guardians are given a false feeling of security that children are safe when playing in or near the street
    - No level of signage can protect a child should an accident occur
- Nearly 30% of tort cases filed against roadway agencies pertain to signs
    - It could be implied that Emmett approves of streets as playgrounds
    - Signs not conformant with the MUTCD increase an agency's liability should an accident occur
- No research supports the effectiveness of such signs

Picture 4 - Sign near Gala Trail and Queen Anne Dr.

Picture 5 - Sign in Subdivision

There are alternatives for these signs. Playground signs (W15-1) should be used if near a playground or park, as is the case for several of the non-compliant signs (see Picture 6, right). Pedestrian crossing signs should be used where children and other pedestrians frequently cross the road to warn motorists.

Picture 6 - W15-1 Playground Sign

Chapter 5 - Future Transportation System

5.1 Truck Routes

At this time the majority of tucks use Highway 52 while passing through the City of Emmett. Keller Associates and the City discussed establishing a dedicated Truck Route to help trucks and larger vehicles navigate through the City with greater ease. Alternative routes were discussed, but no obvious alternative routes were identified as being a better route than Highway 52. Because the majority of trucks already use Highway 52, the City has chosen not to establish a dedicated tuck route at this time.

5.2 Historic Byway

Under the term of the previous City Administration, the City made an application to ITD to make Highway 52 from Payette to Horseshoe Bend a historic byway. The City of Emmett is located approximately midway between these two cities. It was believed that if this stretch of highway were classified as a historic byway it would bring more traffic and business to the City of Emmett. Keller Associates questioned the current City Administration if there was still an interest in making this stretch of highway a historic byway. At this time the City does not have an interest in making this stretch of highway a historic byway. No further action was taken to dedicate Highway 52 as a historic byway.

5.3 Highway 16 to Main Street Bypass Corridor

A proposed bypass route, east of Emmett from Highway 16 to Highway 52, was shown on the 2003 Master Street Plan Map. The bypass idea was initially driven by a large development planned by the Black Canyon Partners company in the early 2000s. The project intended to develop a large portion of land northeast of Emmett, along Frozen Dog/Shale Rock Road near Black Canyon Reservoir. The development is now defunct.

5.3.1 Existing Conditions

Discussions with Gem County and City of Emmett officials identified a perceived increase in non-local motorists that travel Substation to Quail Run Road, Main Street, or Locust Street and then north on Plaza Road as a bypass around Emmett when traveling to Black Canyon Reservoir and other recreational opportunities beyond (see Figure 28 on page 52). Seasonal peaks are believed to occur during summer months and fall hunting seasons. The Kenneth Carberry Elementary School is located at the northwest corner of the Substation Road and 12th Street intersection. Increased traffic and congestion creates safety concerns at the school.

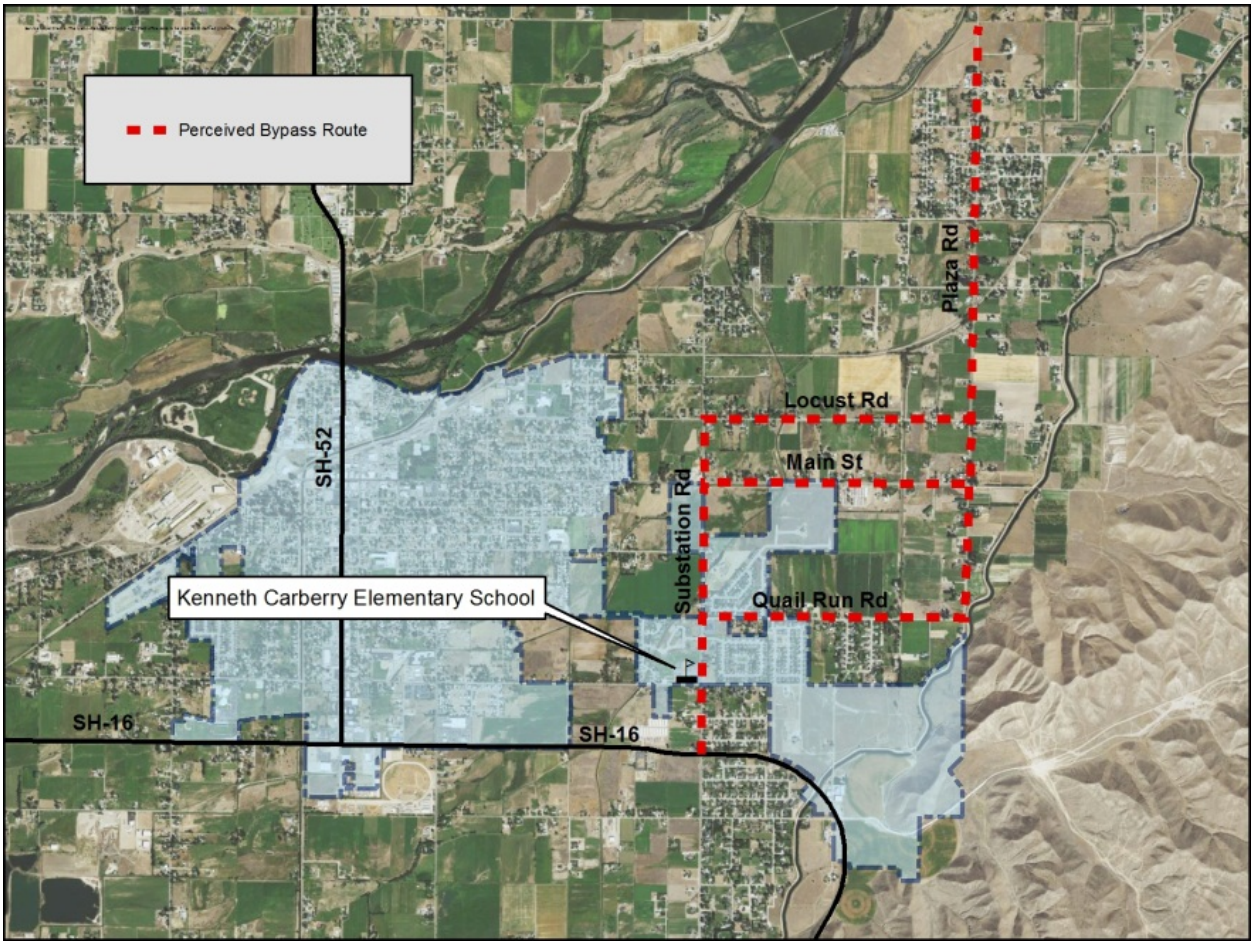

Figure 28 - Perceived Bypass Route

Due to these conditions, city and county officials believe a new route connecting Highway 16 to East Main Street may be beneficial for the following reasons:

- Potential corridor for future extension to Highway 52
- Improve traffic mobility
- Reduce traffic substation Road
- Improve safety at the Carberry Elementary School (12th and Substation Road)

As part of this study, existing data available from the City, County, and ITD was evaluated for three potential bypass corridors.

5.3.2 Bypass Area Traffic Volumes

To help determine traffic patterns in the proposed bypass area, 2013 AADT was obtained from ITD. Based on this data alone, it was difficult to determine vehicular travel patterns, more so those reflecting the perceived conditions. The data was used to create Figure 29 on page 54.

Volumes on Substation, Main, and Plaza Roads are low and not yet approaching volume thresholds for two and three lane roads. However, Traffic volumes on Washington Avenue in Emmett are slightly under the minimum threshold for a three-lane road. It should be noted that this portion of Washington Avenue is primarily a two-lane road, with occasional left-turn lanes, and not a true three-lane road.

ITD traffic volume projections to 2035 were requested for Highway 52 between 1st and 10th Streets and Substation Road between East 12th and East Main Streets, to determine future growth. Year 2013 and forecasted volumes are summarized in Table 14.

Table 14 - Current and Forecasted ADT for Substation and SH-52

Road	From	To	AADT 2013	AADT 2015	AADT 2035	Annual Growth*	% Change*
SH-52	10th St	1st St	12,000	12,370	16,070	1.3%	29.9%
Substation	E 12th St	E Main St	3,600	3,680	4,430	0.9%	20.4%
*2015-2035							

These segments were considered representative of conditions of the highway corridor and Substation Road corridor, respectively. Forecasted volumes on Substation are still well under the established capacity thresholds for a two-lane collector. Traffic volume on Washington Avenue, however, is projected to be very near the maximum threshold by 2035. It is plausible that the proposed bypass would help with congestion on Washington by diverting some traffic that is currently using Washington to the new route. This could also delay the need to widen Washington to five lanes. To what extent the bypass would help with congestion cannot be determined without conducting some form of an origin and destination study, however. Such a study would determine the amount of traffic traveling from SH-16 north to SH-52, and what route they take. From there a model could be created and projected to forecast the effects of a bypass.

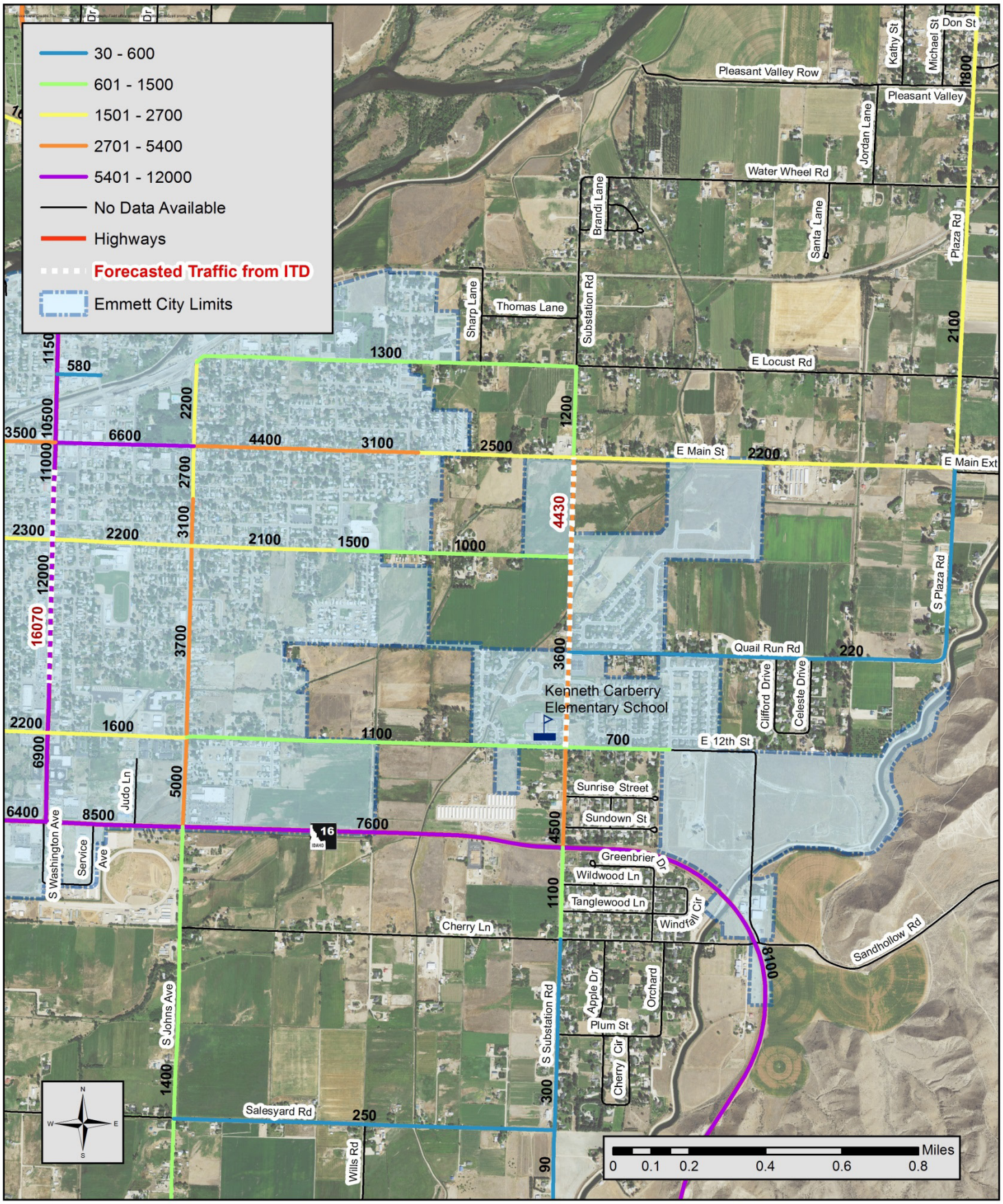

Figure 29 - Bypass Area 2013 and 2035 Forecasted AADT

5.3.3 Cross Section and Right of Way

It is recommended that 100-foot minimum right-of-way be acquired if the bypass is pursued. This is the minimum ROW for an arterial road, the anticipated functional classification of the roadway. Any alternative proposing a new roadway alignment would require substantial ROW acquisition. Parcels of agricultural and residential land would be crossed. Improvements on Substation may require additional ROW acquisition, depending on current ROW.

The County may also need wider ROW along Plaza Road north of Main Street that could be utilized if future conditions warrant an extension of the bypass north to Highway 52, consistent with the original bypass plan.

5.3.4 Potential Environmental Obstacles

A brief environmental scan was conducted for the bypass study. The primary environmental obstacle would be the Black Canyon Canal. The canal flows south from the Black Canyon Dam. There is currently an access road that parallels the west bank of the canal. Another substantial obstacle is the mountain range that parallels the canal to the east.

The current traffic control at the Main Street and Plaza Road intersection would also have to be changed; currently, traffic travels freely east on Main Street then north onto Plaza Road, (with no intersection control device) and vice versa. Essentially Main Street becomes Plaza Road after it bends 90 degrees to the north. Northbound traffic on South Plaza Road is currently controlled by a stop sign at the Main Street intersections.

5.3.5 Potential Alignments

The original bypass layout proposed a Highway 16 interchange at Cherry Lane/Sand Hollow Road; the route would run northwest, crossing the Black Canyon Canal, and then run north, a quarter of a mile west and parallel to Plaza Road. After considering obvious environmental obstacles and other factors, two alternate alignments were proposed. These alternatives are illustrated in Figure 27 on page 58.

Alternative 1 was identified through discussion with the City and County officials and would run west of and parallel to the original bypass layout. A bridge crossing the Black Canyon canal would need to be constructed west of original proposed layout crossing.

Alternative 2 would be broken into two phases. Phase 1 would incorporate the southern portion of the original bypass. This includes an interchange with Highway 16 and then continuing west on Sand Hollow Road then jutting north and crossing the Black Canyon Canal. The route would essentially parallel the canal along its west bank until it tied in to Quail Run Road. From north of the canal crossing, the route would incorporate (rather than parallel) Plaza Road. The wider ROW north of Main Street on Plaza could be incorporated if an extension of the bypass to Highway 52 is necessary in the future, which would be Phase 2 of Alternative 2.

As an alternative to a costly bypass, local improvements such as roadway widening could be completed on Substation Road, East Main Street, and Plaza Road to accommodate increasing traffic as it occurs (Alternative 3). This approach would utilize the widening of the Substation Road Bridge scheduled to be constructed in 2015/2016. These improvements could include widening, and curb and gutter or sidewalk

improvements. If Substation Road is widened, it would be critical to mitigate safety hazards for school children near the Carberry School such as reduced speed school zones, high intensity activated cross walks (HAWKs), etc. Safety enhancements should be considered at the Carberry School regardless of whether Substation is widened due to existing concerns of the perceived conditions.

Refer to Figure 30 on page 57 for a map showing the proposed bypass alignments. All three alignments require the acquisition of substantial amounts of ROW.

5.3.6 Access Management

As discussed earlier in Section 3.8, access management guidelines were developed as part of this study. These guidelines are a stand-alone document in Appendix A. If the bypass is implemented, it is strongly recommended that the City implement the Access Management Guidelines to govern the bypass, ensuring it functions as intended or that the existing policy statement be updated to be more specifically defined.

5.3.7 Phasing

If further studies determine that a bypass is the most beneficial and cost-effective solution to perceived conditions, the first phase of implementation would entail a route from Highway 16 to East Main Street. As funding is available, right of way is preserved, and if future conditions warrant further expansion, the second phase of the bypass could extend it from Main Street to Highway 52 to the north.

5.3.8 Bypass Conclusions

Neither current nor forecasted traffic volumes, with the possible exception of Washington Avenue, warrant the proposed bypass. Available traffic counts do not allow for a detailed picture of travel patterns in the area. Based solely on available traffic data, a bypass does not appear to be warranted in the next 20 years.

There may be other reasons, such as economic and political, to pursue the bypass. Based on these other possible reasons the City of Emmett and Gem County should determine if further analysis should be pursued. It is recommended that an origin/destination study, intersection turning movement counts and ROW preservation (once an alignment is agreed upon) be the next steps. Based on direction from City and County officials, the original bypass alignment is retained. The recommendations and findings of further studies should be considered.

Since much of the area impacted by the proposed bypass corridor alternatives would fall within the City of Emmett's impact area, it is likely that the City of Emmett will make many of the land use and roadway decisions that impact a future bypass road. It is recommended that the City of Emmett collaborate with Gem County on the need and implementation of a bypass road.

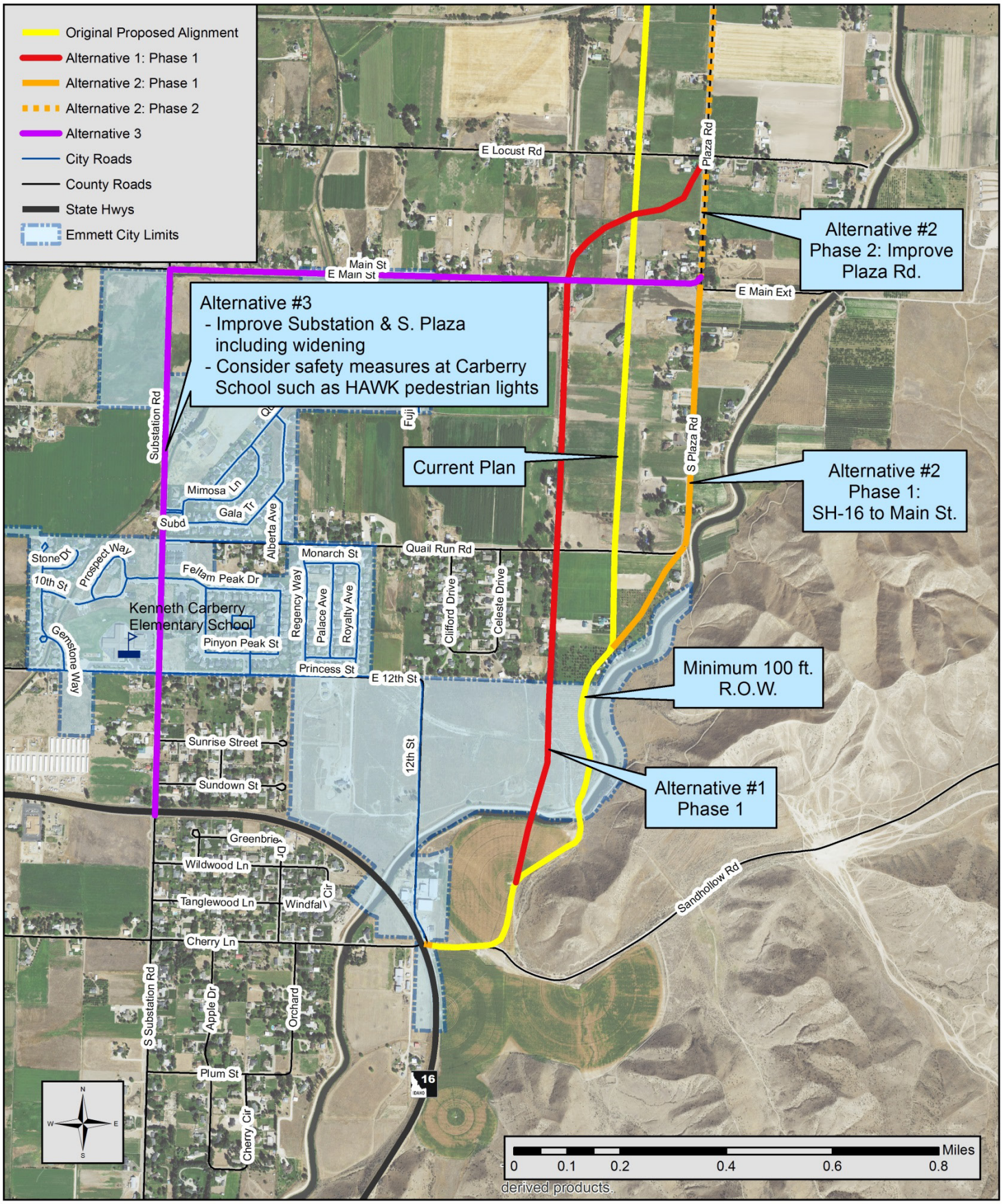

Figure 30 - Bypass Alignment Alternatives

5.4 Future Traffic Volumes

Future traffic volumes were examined to identify areas for potential capacity improvements and functional classification updates. ITD provides traffic data for most collector and arterial roadways throughout the state, as well as data for some local roads. When requested, ITD will extrapolate the current traffic volumes and provide estimates of future volumes for road segments which it has traffic count data on. ITD provides forecasts for individual segments and averages them for continuous segments; the averaged data is summarized in Table 15 below. Detailed AADT traffic volume projection reports are provided in Appendix H.

Table 15 - Future Traffic Volumes

Roadway	Segment No.	From	To	AADT 2014	AADT 2035	% Change
4th St.	417	Main St.	Pine St.	1,450	2,020	39%
12th St.	403	Mill Rd.	Washington Ave.	2,630	2,760	5%
Locust St.	11230	Johns Ave.	Substation Rd.	1,300	2,150	65%
Main St.	5570	Washington Ave.	Pine St.	4,240	4,940	17%
Plaza Rd.	5580	Main St.	Waterwheel Rd.	2,100	2,670	27%
SH-16	1390	Substation Rd.	Johns Ave.	7,550	10,600	40%
SH-52	2010	SH-16	Carson St.	10,970	15,380	40%
Substation Rd.	5590	SH-16	Main St.	3,830	4,870	27%

Projected volumes were used to determine LOS anticipated in 2035 and is shown in Table 16 below and continued on the next page.

Table 16 - 2035 LOS

Road	From	To	Functional Class	Lanes	2035 AADT	2035 LOS
12th St	MILL RD	S BOISE AVE	Major Collector	2	3330	A
12th St	WASHINGTON AVE (SH-52)	JOHNS AVE	Major Collector	2	2500	A
4th St	MAIN ST, EMMETT	S WASHINGTON AVE(SH-52)	Major Collector	2	2240	A
4th St	S JOHNS AVE	S PINE ST	Major Collector	2	1970	A
SH 16	SUB STATION RD	S JOHNS AVE	Principal Arterial	2	10080	C
SH 16	S JOHNS AVE	SH-52, EMMETT	Principal Arterial	3	9830	B
SH 52	SH-16	10TH ST, EMMETT	Principal Arterial	3	14560	D
SH 52	10TH ST	1ST ST	Principal Arterial	2	14570*	D
SH 52	1ST ST	MAIN ST	Principal Arterial	2	13870	E
SH 52	CANAL ST	CARSON ST	Principal Arterial	2	15250	F

Road	From	To	Functional Class	Lanes	2035 AADT	2035 LOS
Main St	TYLER RD	WASHINGTON AVE (SH-52)	Major Collector	2	3640	A
Main St	WASHINGTON AVE (SH-52)	JOHNS AVE	Minor Arterial	2	8110	C
Main St	JOHNS AVE	N PINE AVE	Minor Arterial	2	5460	B
Substation Rd	SH-16	E 12TH ST	Minor Arterial	2	5480	A
Substation Rd	E 12TH ST	E MAIN ST	Minor Arterial	2	4390	A
Plaza Rd	E MAIN ST	WATERWHEEL RD	Minor Arterial	2	2560	A
Locust St	JOHNS AVE	N SUB STATION RD	Major Collector	2	1980	A

*Projection is lower than that in the bypass discussion (section 5.3.2 Table 14); original bypass forecasted in Nov. 2014 and these in Apr. 2016 – ITD updated their forecast during the time period.

SH-52 (Washington Avenue) is projected to have excessive delays and congestion in year 2040 from 1st Street to Main Street and demand is expected to exceed capacity between Canal and Carson Streets. Intersection and capacity improvements will be required to improve service levels. Because this is a state highway, improvements will ultimately be the responsibility of ITD. Other roadways in Emmett and the City Area of Impact are expected to remain at acceptable service levels and no capacity improvement needs are anticipated.

5.5 Future Functional Classification and New Roads

Based on expected development and traffic volumes it is anticipated that functional classifications for Emmett and the surrounding area will be upgraded. Using guidelines from ITD and FHWA, a proposed functional classification map was created. Some of the changes from existing functional classification are summarized in Table 17 below.

Table 17 - Functional Classification Changes

Road (from to)	Existing	Proposed
Johns (Locust to SH-16)	Major Collector	Minor Arterial
Main (Mill to Washington)	Major Collector	Minor Arterial
Main (Substation to Plaza)	Major Collector	Minor Arterial
Mill (Main to SH-16)	Major Collector	Minor Arterial
Plaza (Quail Run to Main)	Minor Arterial	Major Collector
Quail Run (Substation to Plaza)	Minor Arterial	Major Collector

All changes except those to Quail Run and Plaza are “upgrades” in terms of functional classification. Existing and forecasted traffic volumes on Quail Run and Plaza are low and those on East Main Street are relatively high; because of this, it would be more appropriate to classify the specified sections of Quail Run and Plaza as major collectors. These classification changes are expected to accommodate conditions forecasted in 2035. As discussed in Section 3.2 on page 11, Emmett should work with ITD to update functional classifications as conditions change.

5.5.1 New Roads

In addition to these changes to existing roadways, new roadways could be built to enhance connectivity and movement of traffic through Emmett's transportation system. The need for new roads stems from a combination of the need for additional capacity, connectivity improvements, mobility enhancement, and development. Potential new roads have been identified as part of this study for connectivity enhancement and potential development. The intent of the proposed roads shown is to provide to City planners some guidance for development and ideas to maintain or enhance connectivity.

Ideas for potential new roads include the following:

- Extend Moffat Avenue from 4th St. to 7th St (minor collector)
- Extend Fuji Avenue south to Quail Run and north to Main St. (minor collector)
- New roads between Moffat and Substation and 4th and 12th Streets
- Frontage roads north and south of SH16 between South Substation Road and Johns Avenue[3]
- Road from 12th Street to Cherry Lane between Johns Avenue and South Substation Road (major collector)
- Extend Cherry Lane/Schiller Road between Mill Road and Johns Avenue

These roads may or may not be warranted in the future. It is important to plan for new roads ahead of time; planning for them now will help guide development decisions and potential ROW acquisition.

Figure 31 on page 61 shows potential future functional classifications and new roads. These anticipated functional classification changes and new roadways are also presented in the Master Street Plan Map. The Master Street Plan Map includes capital improvement projects that are discussed in the following sections.

[3] As discussed in Section 3.5, ITD owns and controls access to SH-16. Frontage roads will allow access to development between Johns Avenue and Substation Road.

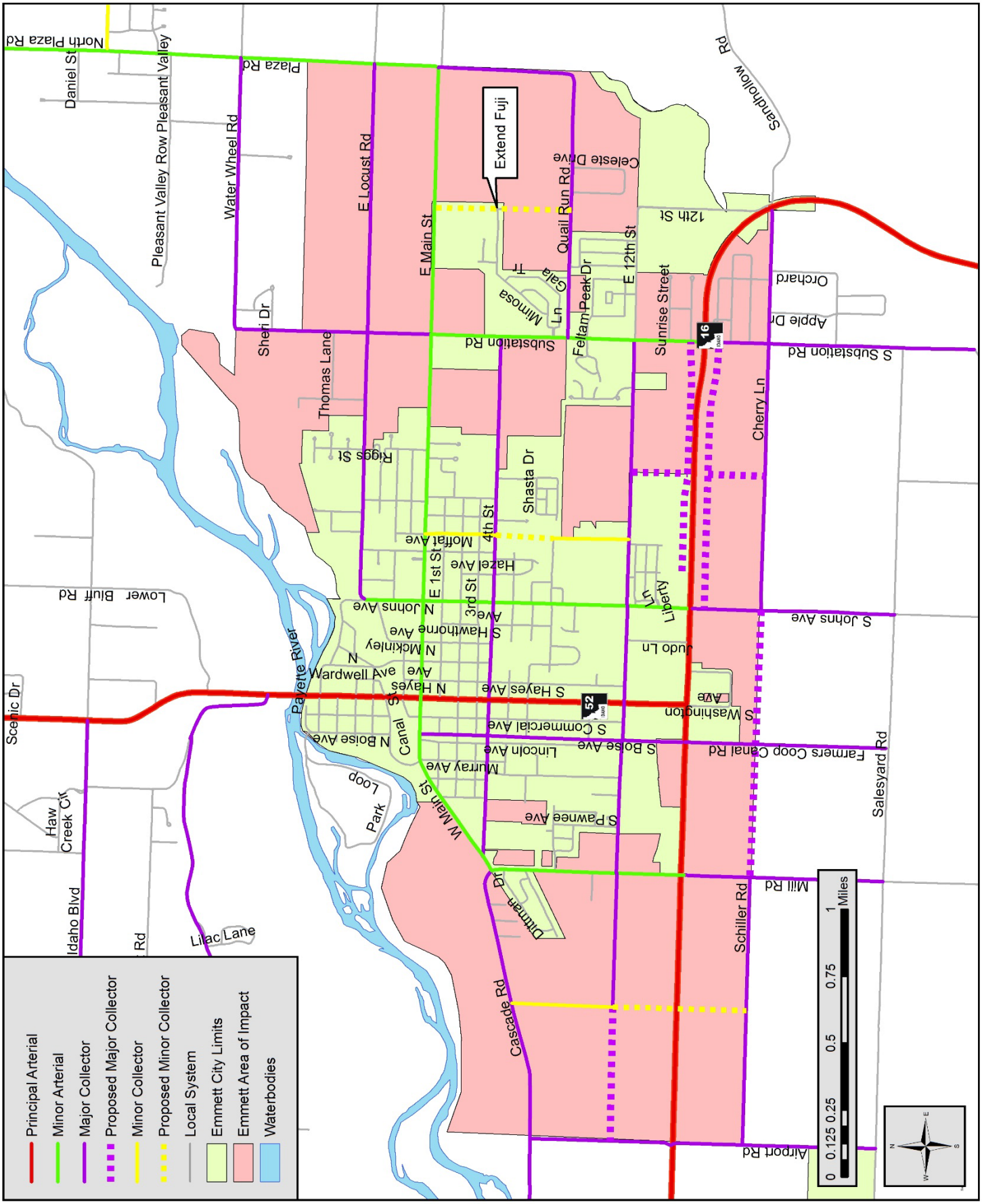

Figure 31 - Future Functional Classification and New Roads

Chapter 6 - Site-Specific Analysis and Recommendations

Six years of crash data (2009 – 2014) obtained from ITD was examined to identify problematic intersections within the City's jurisdiction. Of the approximately 360 intersections within the City's jurisdiction, 256 (71%) did not experience a crash in this six-year period. The S Johns Ave and Highway 16 intersection experienced the most crashes with a total of 19. Figure 32 below shows the 12 intersections with the most crashes.

Figure 32 - Intersections with High-Frequency of Crashes

Table 18 below summarizes crash data for these 12 intersections.

Table 18 - Top 12 Crash Locations

Int. No.	Intersection	Intersection Related Crashes	Non-Intersection Crashes*	Total No. of Crashes
1	S Johns Ave & Hwy 16	18	1	19
2	S Washington Ave & Hwy 52/16	11	6	17
3	Washington Ave & Main St	9	5	14
4	S Washington Ave & 6th St	9	5	14
5	S Washington Ave & 12th St	8	4	12
6	S Washington Ave & 4th St	9	2	11
7	N Washington Ave & Park St	3	4	7
8	S Washington Ave & 5th St	2	4	6
9	S Washington Ave & Musser St	1	4	5
10	S Hayes Ave & E 1st St	1	4	5
11	Commercial Ave & W Main St	2	3	5
12	S Johns Ave & 4th St	5	0	5
*Non-Intersection crashes within 250 feet of an intersection.				

Crash data was examined to determine the most common types of crashes at each intersection. Table 19 below shows the most common types of crashes at each of these 12 intersections.

Table 19 - Most Common Crash Types

Int. No.	Intersection	#1	#2	#3
1	S Johns Ave & Hwy 16	Angle (7*)	Rear-End (6)	Head-on Turning (5)
2	S Washington Ave & Hwy 52/16	Rear-End (5)	Fixed Object (3)	Head-on Turning (3)
3	Washington Ave & Main St	Rear-End (11)	Fixed Object (2)	Side Swipe Same (1)
4	S Washington Ave & 6th St	Rear-End (7)	Seven other types with 1 crash each	
5	S Washington Ave & 12th St	Angle (7*)	Five other types with 1 crash each	
6	S Washington Ave & 4th St	Rear-End (5)	Ped/Bike (3)	Head-on-Turning (2)
7	N Washington Ave & Park St	Rear-End (3)	Ped/Bike (2)	Angle (1)
8	S Washington Ave & 5th St	Rear-End (3)	Backing (2)	Side Swipe Same (1)
9	S Washington Ave & Musser St	Rear-End (2)	Three other types with 1 crash each	
10	S Hayes Ave & E 1st St	Backing (2)	Fixed object (2)	Angle 1
11	Commercial Ave & W Main St	Backing (2)	Three other types with 1 crash each	
12	S Johns Ave & 4th St	Rear-End (2)	Angle Turning (2)	Angle Turning (1)
*Includes angle turning crashes.				

Table 20 below shows the top contributing circumstances to crashes at these intersections.

Table 20 - Most Common Contributing Circumstances

Int. No.	Intersection	#1	#2	#3
1	S Johns Ave & Hwy 16	Inattention (8)	Failed to Yield (3)	Failed to Obey Signal (2)
2	S Washington Ave & Hwy 52/16	Failed to Yield (4)	Following too Close (3)	Drug/Alcohol (2)
3	Washington Ave & Main St	Inattention (5)	Four other unique circumstances	
4	S Washington Ave & 6th St	Inattention (5)	Five other unique circumstances	
5	S Washington Ave & 12th St	Failed to Yield (3)	Following too Close (2)	Four other unique circumstances.
6	S Washington Ave & 4th St	Following too Close (2)	Six other unique circumstances	
7	N Washington Ave & Park St	Inattention (3)	Four other unique circumstances	
8	S Washington Ave & 5th St	Inattention (2)	Two other unique circumstances	
9	S Washington Ave & Musser St	Five unique circumstances		
10	S Hayes Ave & E 1st St	Improper Backing (2)	Three other unique circumstances	
11	Commercial Ave & W Main St	Four unique circumstances		
12	S Johns Ave & 4th St	Inattention (2)	Two other unique circumstances	

Site specific improvements that may help reduce the most common types of crashes at each of the 12 intersections were explored. Recommended site-specific improvements for each intersection are discussed below. The City may wish to pursue a single recommendation, or any combination of the recommendations depending on funds available and public interest.

Each improvement is associated with a crash reduction factor (CRF) which is a multiplicative factor used to compute the expected number of crashes after implementing a given countermeasure at a specific site. CRFs are established and recognized at the national level after engineering studies are carried out. Each improvement's CRF is a citation from the U.S. Department of Transportation's Toolbox of Countermeasures unless otherwise stated. These countermeasures can also be found in the national crash countermeasure clearing house website, www.cmfclearinghouse.org. The CRF is reported in a percentage; for example, if a countermeasure has a CRF of 27% for rear-end crashes, this countermeasure is expected to reduce rear-end crashes by 27%.

Table 21 shows a diagram of each type of crash for illustrative purposes.

Table 21 - Diagram of Crash Types

Crash Type	Crash Diagram
Angle	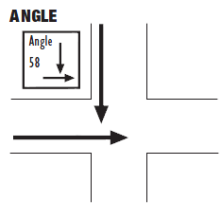
Angle Turning	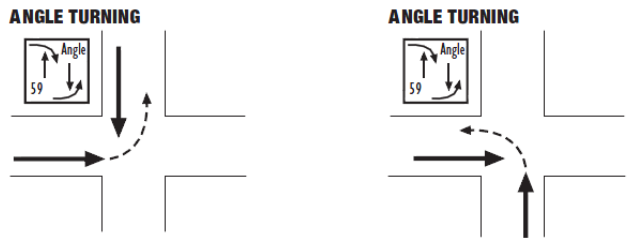
Head-on Turning	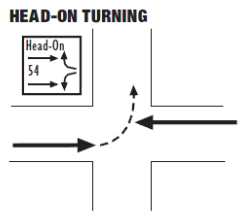
Same Direction Turning	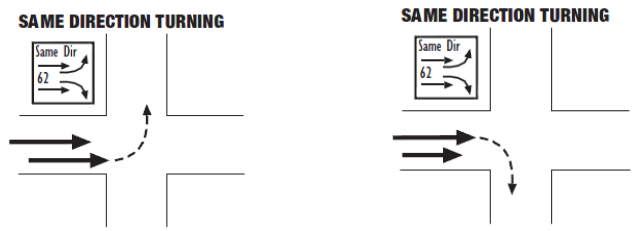
Side Swipe	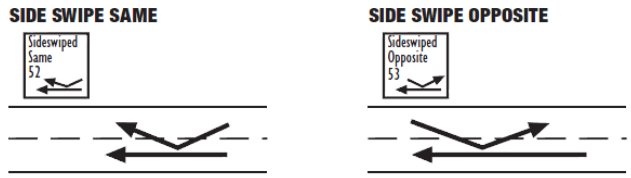
Rear-End	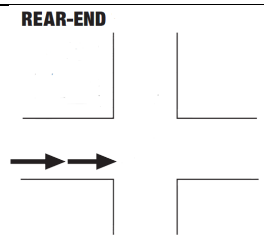

6.1 S Johns Ave and Highway 16 (19 total crashes)

With a total of 19 crashes, this intersection had the most crashes of any intersection within City limits. The three most common types of crashes at this intersection were angle (7 crashes), rear-end (6 crashes), and head-on turning (5 crashes). The most common cause of the angle crashes and rear-end crashes was inattention, and the most common cause of the head-on turning crashes was failure to yield. It should be noted that the majority of the crashes at this intersection are caused by driver error, which cannot be corrected with any amount of improvements. Recommended site-specific improvements for this intersection are:

- Increase Highway 52/16 to 2 lanes in both directions from Substation Road to Mill Road. This improvement has a CRF of 52% for rear-end crashes, and a CRF of 31% for all types of crashes. This improvement may also help further reduce crashes at other intersections on Highway 16/52 between Substation Road and Mill Road. This is an expensive countermeasure, which may not score well on a benefit to cost analysis. This would require concurrence with ITD.
- Install a flashing beacon on westbound Highway 16, and install a static "signal ahead" sign (as shown in Figure 33) on eastbound Highway 16, as advance warning of the signal ahead. This improvement has a CRF of 36% for rear-end crashes. This will require concurrence with ITD.
- Increase all-red clearance interval to help reduce the number of angle crashes. The CMF Clearinghouse reports a CRF of 20% for angle, head-on, and sideswipe types of crashes associated with this type of improvement.
- Verify the yellow change interval is appropriate for the observed speeds at this intersection.

Figure 33 - W3-3 "Signal Ahead" Sign

Through discussion with the City and ITD personnel it was determined that installing advance signal warning beacons and verifying appropriate signal timing is the preferred improvements.

6.2 S Washington Ave & Highway 52/16 (17 total crashes)

This is a signalized intersection, and the busiest intersection within the City's jurisdiction. S Washington Ave has an annual average daily traffic (AADT) volume of 11,000 and Highway 52 and Highway 16 have AADT volumes of 5,500 and 7,400 respectively. Over the six-year period of crash data examined, this intersection had a total of 17 crashes. The most common type of crash at this intersection was a rear-end crash, totaling five. The second and third most common types of crashes at this intersection were collisions with fixed objects and head-on turning crashes, totaling three each. The most common cause of the rear-end crashes was following too close. Failure to yield and drug/alcohol impaired contributing circumstances were the cause of the majority of the other crashes at this intersection, both driver errors. Site specific improvements will help reduce the total number of crashes at this intersection, but never totally eliminate driver error. Recommended site-specific improvements to reduce the number crashes at this intersection are:

- Increase Highway 52/16 to 2 lanes in both directions from Substation Road to Mill Road. This improvement has a CRF of 52% for rear-end crashes, and a CRF of 31% for all types of crashes. This improvement would also help further reduce crashes at all other intersections on Highway 16/52 between Substation Road and Mill Road. This is an expensive countermeasure, which may not score well on a benefit to cost analysis. This will require concurrence with ITD.
- Install flashing beacons on eastbound Highway 52, and a static "signal ahead" sign on westbound Highway 16 as advance warning of a signal ahead. This improvement has a CRF of 36% for rear-end crashes. This will require concurrence with ITD.

Through discussion with the City and ITD personnel it was determined that installing advance signal warning beacons is the preferred alternative at this site.

6.3 Washington Ave & Main St (14 Crashes)

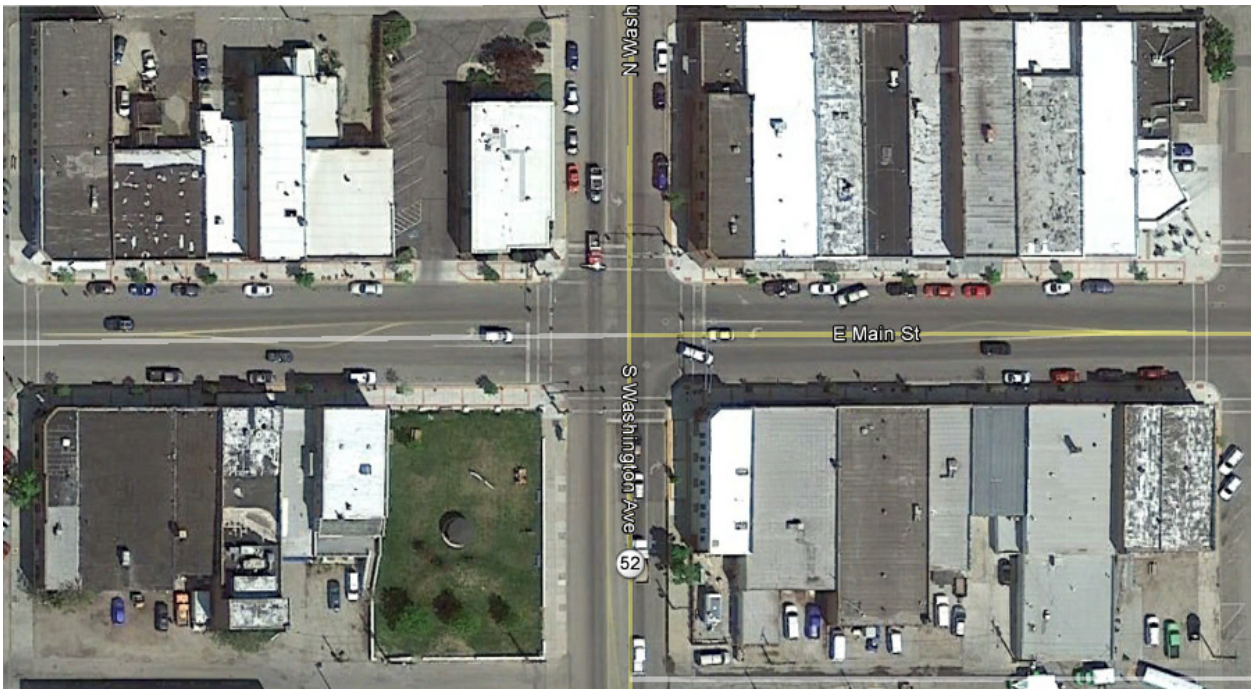

This is a signalized intersection in the heart of downtown Emmett. Of the 14 total crashes at this intersection, 11 were rear-end crashes, two were fixed object crashes, and one was a sideswipe crash. The most common causes of the rear-end crashes was due to driver error such as inattention and following too close. Buildings currently surround this intersection on three corners; Wells Fargo on the northwest, The Hen House and other buildings on the northeast, and Cherries and the Gem County Recreation District on the southeast. A small park is located on the southwest corner. Existing sidewalks and trees/landscaping also exist on all corners of this intersection. With existing structures and landscaping, site specific improvements may need to be limited to within the existing right of way to avoid right of way acquisition and relocation. Recommended site-specific improvements are:

- Install “signal ahead” signs on all four intersection approaches.
- Add 3-inch yellow retroreflective sheeting to signal back plates
- Increase all-red clearance interval and verify the yellow change interval is appropriate for the observed speeds at this intersection.

Installing retroreflective sheeting to signal back plates and verifying appropriate signal timing are the preferred alternatives for this site as determined through discussion with the City and ITD personnel.

6.4 S Washington Ave & 6th St (14 Crashes)

This is a non-signalized intersection. North/southbound traffic on S Washington Avenue does not stop, and east/westbound traffic on 6th St is controlled by stop signs. This intersection experienced seven rear-end crashes, the majority of which occurred on S Washington Ave. The other seven crashes at this intersection are all unique types of crashes. Driver error (inattention) was the main contributing circumstance for the rear end crashes. Recommended site-specific improvements for this intersection are:

- Install left-turn lanes on S Washington Avenue. The road section of S Washington Avenue is approximately 42 feet wide at this intersection, the same width as two other intersections (4th St, and 12th St) that have left-turn lanes. This improvement has a CRF of 39% for rear-end crashes. If this improvement is implemented, on-street parking on S Washington Avenue will need to be removed near the intersection. It is recommended that no parking signs and painted curbs indicating no parking be installed to prevent on-street parking near the intersection.

A discussion with the City and ITD personnel led to the idea of a continuous two-way left-turn lane (TWLTL) from SH-16 to the Payette River Bridge would be preferred on Washington Avenue. At intersections such as this, the TWLTL would transition into a left-turn lane.

6.5 S Washington Ave & 12th St (12 Crashes)

This is a non-signalized intersection. Traffic on north/southbound S Washington Avenue does not stop, and traffic on east/westbound 12th St is controlled by stop signs. The most common type of crash at this intersection was an angle crash, totaling seven caused mainly by failure to yield. The other five crashes at this intersection are all unique types of crashes. City officials and several residents have complained about sight distance at this intersection due to the hotel on the northwest corner causing poor visibility. There have also been complaints about congestion at this intersection around noon and 3:30 pm. This intersection has been identified as a potential location for a traffic signal or roundabout installation to help address geometry and congestion issues. Section 6.13.2 discusses in further detail the preliminary evaluation of a signal or roundabout installation at this intersection. Recommended site-specific improvements are:

- Improve the sight distance on the northwest corner by removing one, or possibly both trees on the east side of the hotel and relocating the power pole farther to the west. This improvement has a CRF of 5% for all crashes.
- Convert east leg (12th St.) to a combined through- and left-turn lane from its current left-turn only configuration, and convert existing through- and right-turn lane into a right-turn-only lane. Combining through- and left-turn movements is typically better for stop-controlled approaches in regards to congestion, as is the case here. The same configuration could be applied for the west leg which currently is only two lanes (one each direction). The left-turn and through lane may have to be extended to accommodate longer queue lengths.

- Install a traffic signal at this intersection. This countermeasure has a CRF of 17% for all crashes, and would help relieve congestion during the busier hours of the day. Also, with the installation of a traffic signal, poor visibility on the northwest corner will be less of an issue.
- Convert the intersection to a roundabout or mini-roundabout. This countermeasure has a CRF of 44% for all types of crashes.
- City and ITD personnel recommend considering piping the open channel canal and moving the sign on the southeast corner of the intersection.

Discussion with the City and ITD personnel led to the determination that removing trees on the northwest corner, piping the open channel canal, and moving the large sports complex sign on the southeast corner are preferred alternatives that will improve sight distance at the intersection. Converting the east and west intersection legs to a combined through- and left-turn plus a right-turn-only lane may also be considered by the City to improve congestion.

6.6 S Washington Ave & 4th St (11 Crashes)

This is a signalized intersection. S Washington Avenue has one lane and an additional left-turn lane in both directions and 4th Street has one lane in each direction. The most common type of crash at this intersection was a rear-end crash (5), mostly caused by driver error including drug impairment, following too close, and foot slipped off or caught on pedal. The second most common type of crash was a pedestrian/bicycle crash (3). This intersection is two blocks from the Emmett Middle School, and regularly sees pedestrian traffic on weekdays during the school year. New curb ramps were constructed at all four corners of this intersection between October 2012 and August 2013. Two of the pedestrian crashes occurred before this project. Since this improvement there has been one pedestrian crash.

Improvements at this intersection are recommended to mitigate rear-end and pedestrian/bicycle accidents:

- Install "signal ahead" signs on all four intersection approaches and add 3-inch retroreflective sheeting to signal back plates
- Verify that pedestrian push buttons and crosswalk timing intervals are up to current standards.
- Increase all-red clearance interval and verify the yellow change interval is appropriate for the observed speeds at this intersection.
- It is recommended that the signal control box be moved back from the edge of the traveled way behind the sidewalk. It is currently located within the intersection's clear sight triangle and obstructs the view of motorists. This was identified during the City's recent walkability survey and is a particular concern for middle school pedestrian traffic; drivers often cannot see children standing behind the control boxes waiting to cross the street.

The preferred alternatives for this intersection are to add reflective signal back plates, appropriate crosswalk timing intervals, and relocating the signal control box. Relocation of the signal control box is the City's highest priority for this site as there are concerns about pedestrian visibility, particular middle school children that frequently cross at this intersection.

6.7 N Washington Ave & Park St (7 Crashes)

This is a non-signalized intersection near the railroad tracks and the Farmers' Cooperative Canal that experienced seven crashes. The most common type of crash was rear-ending (3), all caused by driver error (inattention and following too close). The second most common type of crash at this intersection

was a crash with a pedestrian (2). One of the pedestrian crashes occurred at the angled street parking on the southwest corner of the intersection, and the other pedestrian crash occurred at the intersection, but involved an alcohol impaired driver. The crash data does not show a need for pedestrian improvements at this intersection. There have been multiple complaints regarding congestion and long queue waiting times on Park Street to access N Washington Avenue from City officials and residents; Section 6.2 discusses preliminary traffic signal/roundabout evaluations at this intersection. Recommended site-specific improvements for this intersection are:

- Option 1: Install left-turn lanes on N Washington Ave. The road section of Washington Ave is approximately 53 feet wide at this intersection which would allow for the installation of a left turn lane without widening the road. This improvement has a CRF of 39% for rear-end crashes. If this improvement is implemented, on-street parking on N Washington Ave may need to be removed near the intersection. If on-street parking is removed, it is recommended that no parking signs and painted curbs indicating no parking be installed to prevent on-street parking near the intersection. This was identified as the preferred alternative after discussion with the City.
- Option 2: Install a traffic signal or roundabout at this location. While signals and roundabout installations have been shown to reduce crashes, and may help traffic congestion, the location of this intersection is too close to the traffic signal at Main Street and Washington.
- Option 3: Convert Park Street into a one-way street, with traffic heading away from Washington Avenue: from Washington Avenue to Hayes Avenue a one-way street eastbound, and from N Washington Avenue to N Commercial Avenue a one-way street westbound. This would force Park Street traffic to divert to Main Street to access N Washington Avenue. The intersection of Main St and Washington Street is a signalized intersection and would be able to relieve congestion and reduce queue waiting times for traffic to access Washington Avenue. Another benefit of this alternative is that it eliminates the potential for traffic queuing from Park Street northward into the at-grade rail crossing. This alternative is not considered to be viable, as determined through discussion with the City.
- Option 4: Another alternative would be to only allow right hand turns onto Washington Avenue from Park Street. This would involve constructing a raised median on Washington Avenue through this intersection and installing “right turn only” signs (such as shown in Figure 34) on both legs of Park Street at this intersection. The raised median would also prohibit left hand turns from Washington Avenue onto Park Street. Eliminating all left hand turns at this intersection will greatly relieve congestion and reduce long queue waiting times at this intersection. This option would make it difficult for snow plows to clear streets during winter maintenance operations and is not considered a viable option for the City.

In discussion the City and ITD, converting Washington Avenue from SH-16 to the Payette River bridge into a 3-lane road (one lane each direction plus a continuous TWLTL) would help with congestion issues along the entire corridor, including at this intersection. Part of the 3-lane configuration would require prohibiting on-street parking, which would help with snow plow concerns of parked vehicles so close to the bridge.

Figure 34 - Signs for "Right Turn Only" Configuration

6.8 S Washington Ave & 5th St (6 Crashes)

This is a non-signalized intersection. Of the six total crashes, five occurred on S Washington Avenue. Three crashes were rear-ending crashes caused mostly by driver error (inattention and distracted in/on vehicle), two were due to backing caused by driver error (inattention and improper backing), and one was a sideswipe same direction caused by driver error (improper lane change). The three rear-end crashes all occurred on S Washington Avenue. Recommended site-specific improvements at this intersection are directed to mitigate rear end crashes and total intersection crashes on S Washington Ave. Recommended improvements are:

- Install a left-turn lane on S Washington Avenue. The road section of S Washington Avenue is approximately 42 feet wide at this intersection, the same width as two other intersections (4th St, and 12th St) that have left-turn lanes. This improvement has a CRF of 39% for rear-end crashes. If this improvement is implemented, on-street parking on S Washington Avenue will need to be removed near the intersection. It is recommended that no parking signs and painted curbs indicating no parking be installed to prevent on-street parking near the intersection. This will require concurrence and cooperation with ITD.

A continuous TWLTL on Washington Ave that transitions into a left-turn lane at this intersection is the preferred alternative.

6.9 N Washington Ave & Musser St (5 Crashes)

This is a non-signalized intersection. Out of the five total crashes at this intersection, two were rear-end crashes caused by driver error (following too close and inattention). The other three crashes were all unique crash types. Also, of the five total crashes, four were related to a driveway/alley/parking lot. After reviewing the crash data, no correlation showing a common crash type at this intersection could be found. N Washington Avenue is a Principal Arterial road with multiple points of access throughout the City. Several crashes on a road of this size and traffic volume can be expected if access is not limited. No site-specific improvements are recommended for this intersection.

6.10 S Hayes Ave & E 1st St (5 Crashes)

This unsignalized intersection had five total crashes. Of the five crashes, two were due to backing into parked cars, and two were fixed-object crashes. It should be noted that one of the fixed objects was a parked car. The First Baptist Church has a small parking lot with 90° stalls along the east leg of this intersection where cars are forced to back out perpendicular to E 1st Street in order to exit. On-street parallel parking is also present on each leg of this intersection. The parking configuration is the main cause of accidents at this intersection. Recommended site-specific improvements are:

- Verify that on street parking setback distances from the intersection are in compliance with Idaho Code and/or City Code. Install no parking signs (such as shown in Figure 35) to indicate the no parking extents.
- Ensure enforcement of the no parking zones with frequent inspection of local law enforcement.
- Reconfigure the Baptist Church parking lot: Remove the 90° parking stalls and install curb, gutter, and on-street parallel parking, or at a minimum convert the 90° parking stalls into angled parking stalls accessible only from westbound E 1st Street.

Verifying parking setbacks and installing appropriate signing is the preferred alternative at this location.

Figure 35 - R7-1 "No Parking" Sign

6.11 Commercial Ave & W Main St (5 Crashes)

This is an unsignalized intersection in the downtown area. Traffic on east/westbound W Main Street does not stop, and north/southbound traffic on Commercial Avenue is controlled by stop signs. Angled on-street parking is present on both sides of Commercial Avenue, and parallel street parking is present on W Main Street. Of the five total crashes at this intersection, two were caused by improper backing into parked cars on S Commercial Avenue. The other three crashes were angle, fixed object, and rear-end. It should also be noted that the fixed object was a parked car on S Commercial Avenue. The three crashes involving parked cars all occurred on the south portion of Commercial Avenue—the parking configuration on this portion of Commercial Avenue appears to be the main cause of crashes in this area. Recommended site improvements are:

- Option 1: Reconfigure the parking on the south portion of Commercial Ave from W Main St to the first alley to the south to be parallel parking. This option may result in the loss of a small number of parking spaces in the downtown area, but would allow parked cars to be farther away from the travel lanes and from parked cars on the opposite side of the road.
- Option 2: As an alternative to parallel parking, reconfigure the parking on both segments of Commercial Ave from W Main Street to the first alley to the north and south to be "back-in angle parking" only. This will involve changing the orientation of the parking stall lines, but

would not result in a loss of parking spaces. With this option, drivers have greater visibility when exiting their parking stalls. This option would be a new parking style to the City of Emmett, and as such, will require several new signs (such as shown in Figure 36) directing drivers how to park in this portion of the intersection.

Figure 36 - Back-In Parking Only Signs

The preferred alternative is parallel parking.

6.12 S Johns Ave & 4th St (5 Crashes)

This is non-signalized intersection. Site-specific improvements are not recommended in this report, as this intersection is part of the S Johns Avenue Reconstruction Project. The intersection will be reconfigured as a mini-roundabout as part of that project, which is scheduled for construction in 2020.

6.13 New Traffic Signal and Roundabout Evaluations

The intersections of Park Street and Washington Avenue and 12th Street and Washington Avenue were identified as intersections that may benefit from a traffic signal or roundabout installation. A preliminary analysis was conducted to determine if these improvements may be necessary.

6.13.1 Washington Avenue and Park Street

The Washington Avenue and Park Street intersection is less than one tenth of a mile north of the signalized Main Street and Washington Avenue intersection. This is too close to install another signal; typically, ¼ to ½ mile minimum spacing between traffic signals is recommended on urban arterial streets. In addition, a traffic signal at Park Street would likely queue vehicular traffic northward into the at-grade rail crossing—there is only 70 feet separating the Park Street intersection and the rail crossing. Drivers desiring to turn left onto Washington from Park Street can alternately drive one block south, turn onto Main Street, and then make a left turn at the Main/Washington signal. A roundabout at this intersection would also be too close to the signalized intersection of Main Street and Washington Avenue, as roundabouts typically follow the same access spacing guidelines as traffic signals. Queuing onto the adjacent rail crossing would also be a concern if a roundabout were installed at this intersection. A signal or roundabout at the intersection of N Washington Avenue and Park Street is not recommended.

6.13.2 12th Street and Washington Avenue

The 12th Street and Washington Avenue intersection is approximately ¼ mile from the closest signalized intersection, Washington Avenue and Highway 16/52. The posted speed limit on Washington Avenue is 25 mph. Given the speed limit and proximity to the nearest intersection, a traffic signal or roundabout would be acceptable in terms of spacing and access management.

In regard to geometry and properties adjacent to the 12th and Washington intersection, a signal would be more appropriate (if indeed warranted) than a standard roundabout. Buildings and structures are located very close to property/ROW lines at the intersection corners, particularly the motel on the northwest corner and an open canal at the southeast corner of the intersection. The acquisition of ROW necessary to accommodate a standard roundabout would likely be very costly.

Alternately, a mini-roundabout, such as is currently being designed for two intersections along S Johns Avenue, would be very appropriate. The conditions for which a mini-roundabout is favorable are 1) low-speed (25 mph) roadway, 2) a single through lane in each direction, and 3) a maximum AADT of 15,000 vehicles.

Based on AADT for the intersection's four legs, the Washington (north and south) legs currently operate with a LOS of D. LOS of D is acceptable during peak hours and generally indicates that traffic may flow freely during off-peak times, but may experience minor congestion during peak hours. The 12th Street legs (east and west) operate with a LOS of A. Based on the LOS, it does not appear that a traffic signal or roundabout is needed in the near future. However, there are nine different warrants in the MUTCD that can be used to determine if a signal may be constructed. If a signal is something the City wishes to further investigate, an intersection study should be performed and the applicable warrants studied. Roundabouts do not require warrant studies.

In regards to the effects a mini-roundabout would have on traffic flow, traffic volumes for the Washington legs are roughly 4 times greater than those of the 12th Street legs. This is not anticipated to cause traffic flow issues other than traffic on Washington may experience slight delay where currently it experiences no delay; implementing any sort of control will introduce delay to Washington Avenue traffic. All vehicle traffic speeds through a mini roundabout are expected to be 15 mph, including large trucks. Mini roundabouts are designed so the entire island is a mountable apron for larger trucks. Their design typically allows for buses and fire trucks to navigate them without having to mount the apron. Large trucks going through the roundabout generally require small portions of their trailers to mount the outside of the apron, and those turning left may have to mount the entire center island and apron. However, it is not anticipated that significant truck traffic will be turning left onto 12th Street. A mini roundabout is not expected to delay truck traffic any more than normal passenger vehicle traffic.

Again, imposing any traffic control on Washington will cause some delay. By implementing a roundabout, or even a traffic signal, some delay is inherent, and that delay must be weighed against the need to address delay on the 12th Street intersection legs.

While no warrant studies are required for roundabouts, it is recommended that a detailed concept study be carried out if a mini-roundabout is to be pursued further. A concept study should include a traffic model of the mini-roundabout. ITD's concurrence and cooperation would be required as Washington Avenue is part of State Highway 52. The roundabout concept was discussed with City and ITD personnel and is not recommended by either party.

6.14 State Highway 52 Improvements by ITD

During the development of this transportation plan, ITD released the 2017-2021 Idaho Transportation Investment Program (ITIP). The ITIP lists a SH-52 improvement project. The development phase, which would include engineering and design, is programmed in year 2019 and construction is programmed in 2021. The project limits are milepost 30.27 (Farmers Coop Canal Bridge) to milepost 31.844 (Payette River Bridge). This project would improve the highway (Washington Avenue) through downtown Emmett.

This is an excellent opportunity for the City to voice their concerns and desires for the Washington Avenue corridor. Many of the site-specific analyses in the previous sections could be addressed in the SH-52 reconstruction project. ITD and the City have already begun discussions. At the time of this report, the overall purpose of the project is primarily to address poor pavement condition. The actual project scope has not been fully determined, but will be more than a seal coat and could include pavement rehabilitation or full reconstruction. ITD would like to address drainage and Americans with Disabilities Act (ADA) issues within State and City right-of-way if possible. ITD and the City will coordinate on safety and sidewalk improvements. The funding for this project does not allow for streetscape and street lighting, but other funding sources could be pursued to incorporate these types of improvements.

City-desired improvements along the downtown portions of State Highway 52 are outlined in more detail in Chapter 7. It is recommended that the City and ITD partner where possible to implement these improvements as part of this ITD project.

6.15 School Zones

Emmett is served by the Emmett Independent School District. Schools within Emmett and its Area of Impact include Emmett High School, Black Canyon High School (in the district offices building), Emmett Middle School, and the Kenneth Carberry Elementary School. Shadow Butte Elementary is on Idaho Boulevard just east of Mesa Avenue but is outside of city limits and the area of impact.

School zones are required to comply with Part 7 – Traffic Control for School Areas of the MUTCD. Part 7 of the MUTCD should be used when implementing school zones.

To further standardize school zones within Emmett and its area of impact, it is recommended that an Emmett-specific supplement to the MUTCD be created by a licensed professional engineer. The intent of the recommended supplement would be to standardize applications of traffic control devices and crossing guards in school zones on all public streets within Emmett and its area of impact. Through consistent application of signing and pavement markings in school zones, consistent behavior from motorists will result, resulting in improved safety for students traveling to and from school.

Chapter 7 - Capital Improvements

7.1 Capital Improvement Projects

After all the facts and figures were collected and evaluated to determine existing conditions and future needs, several projects were identified. Existing and future conditions and potential projects were presented to the City. The City then prioritized a list of projects as capital improvements to be completed within five years or as long-range goals. The recommended projects presented below represent the highest priority transportation projects for Emmett.

7.1.1 South Johns Avenue Improvements

South Johns Avenue is a major north-south corridor in Emmett. A federally-funded project to reconstruct South Johns Avenue from approximately 4th Street to 12th Street is currently in the design stages. The intended design will include a continuous two-way left-turn lane and mini roundabouts at the 4th and 12th Street intersections. Replacement of utilities beneath the road are planned to occur with the roadway reconstruction as well as continuous sidewalk, curb gutter, bike lanes, and street illumination on both sides of the roadway. This project is the currently highest priority for the City of Emmett. The estimated cost for this project as listed in the Idaho Transportation Improvement Program (ITIP) is $2,144,000. The programmed construction year is 2020.

7.1.2 Washington Avenue Two-way Left-Turn Lane and Speed Limit Increase

Chapter 6 discussed several improvement options for the Washington Avenue Corridor. Many improvements include addition of turn lanes. It is recommended that a continuous two-way left-turn lane (TWLTL) be implemented throughout the Washington Avenue corridor from Highway 16 to the Payette River. The TWTL should transition into turn lanes at intersections. ITD has included SH-52 improvements on the Idaho Transportation Improvement Program (ITIP) and will consider implementing a TWLTL as part

of those improvements. Part of these improvements should include relocating the signal control box at the Washington Avenue and 4th Street intersection to improve sight distance and enhance the safety of pedestrians that cannot be seen by drivers when standing by the control box.

Implementing the TWLTL would result in loss of on-street parking throughout the corridor. This is not expected to be an issue as adjacent businesses and homes have on-site parking and alley access. Removing of on-street parking also make winter maintenance operations such as snow plowing much easier for ITD and the City. Signing restricting on-street parking should be implemented as part of this project. Removing the on-street parking and adding a TWLTL may allow for a higher speed limit on Washington Avenue. The existing 25 mph speed limit could possibly be raised to 30 mph or 35 mph depending on speed study findings. A higher speed limit along with signal timing modifications could greatly improve traffic flow through the Washington Avenue corridor. A speed limit study will likely be required to raise the speed limit.

It is anticipated that this overall project will be funded by ITD. Additional work above and beyond pavement improvements, markings, and signing will likely be the responsibility of the City of Emmett. The cost for improvements is listed in the FY17-21 ITIP is $4,700,000.

7.1.3 Mid-Block Pedestrian Crossing on Washington Avenue between 6th and 10th Streets

It is recommended that a mid-block pedestrian crossing be implemented on Washington Avenue between 6th and 10th Streets. This crossing would greatly enhance pedestrian mobility and safety in the corridor. A high-intensity activated crosswalk (HAWK) or rectangular rapid flashing beacons (RRFBs) would be good crossing configurations to implement. This project would require concurrence with ITD. Further study is needed to determine the best location for a mid-block crossing in this corridor. A HAWK signal is estimated to cost $150,000.

7.1.4 Pedestrian Crossing Improvements – 6th and 10th Street

Pedestrian crossings should be improved at the intersections of 6th and 10th Streets with Washington Avenue. Improvements include ADA compliant curb ramps, crosswalk pavement markings, and improved signing in compliance with the MUTCD. These improvements could be incorporated into the Washington Avenue improvement project with ITD. It is estimated that each intersection will cost $16,500, for a total of $33,000.

7.1.5 Reflective Traffic Signal Borders

Installing yellow retroreflective borders to traffic signals on Washington Avenue will help enhance the visibility of signals in an effort to reduce crashes. These reflective borders have been shown to provide visual benefits during both daytime and nighttime conditions. These improvements are low cost and have a high safety benefit. They provide a consistent and controlled-contrast background for signals. They also enhance visibility of traffic signals for aging and color vision impaired drivers. They are also useful during power outages as they make signals visible when they would otherwise be dark. These borders are optional per the MUTCD and can cost between $35 and $110 per signal head to install. To install reflective signal back plates on signals at the Washington Ave. intersections with Main Street and 4th Street it is estimated to cost $200 per signal head, for a total of $4,000 for both intersections combined.

Picture 7 - Reflective Traffic Signal Borders (Source: FHWA)

7.1.6 Advance Signal Warning Beacons on SH-16

It is recommended that Emmett work with ITD to implement advanced warning beacons on State Highway 16 to help reduce the number of rear-end crashes. These beacons begin flashing before the signal turns red to warn motorists a certain distance from the intersection that they should prepare to stop. They are spaced such that drivers have adequate time after seeing the flashing beacons to be able to come to a stop. These warning beacons should be placed on east/westbound Highway 16 in advance of the Washington Avenue and Johns Avenue intersections similar to those east of Substation and SH-16 intersection.

7.1.7 12th and Washington Intersection Sight Distance Improvements

The Gem Island Sports Complex sign is located on the southeast part of the Washington/12th intersection. Moving this sign would improve sight distance at the intersection. There is an open channel canal at the same location; the canal could be piped to facilitate moving the sign to the east. If the canal was piped it would also allow for widening the intersection and further enhancements. In addition, two trees on the northeast corner of the intersection obscure the view of drivers. It is recommended that these trees be removed to improve sight distance.

7.1.8 ADA Curb Ramp Improvements

The ADA Transition Plan for Curb Ramps identified strategies for implementing curb ramp improvements throughout Emmett. The recommendations of that plan should be implemented to bring pedestrian facilities in compliance with ADA and provide accessible routes. Any road work above and beyond routine maintenance must include brining adjacent pedestrian facilities into compliance with ADA. Refer to the ADA Transition Plan.

7.1.9 Main Street Farmers Coop Canal Bridge

A 2017 inspection of the bridge on Main Street spanning the Farmers Coop Canal indicates the bridge has a condition rating of 66.5. The slab is in poor condition with heavy leaching and efflorescence. A reinforced concrete pier wall has 2 inches of surface coating undermining on the south end. Based on the sufficiency rating, the bridge is eligible for Federal Aid Bridge rehabilitation funding through LHTAC, but it is unlikely a grant application would be successful given the present condition. As the bridge deteriorates, it may be beneficial to re-examine funding options. Two reconstruction alternatives were briefly analyzed in this study. Both alternatives maintain the same width of roadway and would be 60 feet wide.

The first alternative is replacing the structure with an 18" precast voided slab bridge. This would require raising the roadway a few inches along with redesigning driveways as the bridge would need to be around 50 feet to clear the channel and existing structure. It is estimated to cost approximately $1.11 million. This estimate is used in the capital improvement plan for conservative budgeting purposes.

The second alternative is replacing the structure with a precast concrete stiff leg culvert. The culvert would be a single barrel similar to the existing structure at 26 to 30 feet in length. This alternative would also require some driveway realignments. It is estimated to cost roughly $420,000.

7.2 Capital Improvement Plan

The projects identified in this study are presented as a prioritized capital improvement plan. These improvements are intended to improve the overall transportation system in the City of Emmett and represent the highest transportation priorities of the City. This list does not reflect site-specific, development-induced improvements that are likely as growth occurs over time.

Table 22 - Capital Improvement Plan

Priority No.	Project	Multi.-Jurisdiction	Planning Cost Estimate	Anticipated Year
Roadway and Pedestrian Improvements				
1	S. Johns Ave Reconstruction - 4th to 12th	Emmett	$ 2,144,000*	2021
2	Washington Ave. TWLT Lane and Speed Limit	ITD	$ 4,700,000*	2021
3	Washington Ave. HAWK Crossing	ITD	$ 150,000	by 2025
4	Pedestrian Crossing Improvements - Washington at 6th & 10th	ITD	$ 33,000	by 2025
5	Reflective Traffic Signal Borders	ITD	$ 4,000	by 2025
6	SH-16 Advance Signal Countdown Warnings	ITD	$ 120,000	by 2025
7	Sports Complex Sign and Canal - 12th/Washington	Emmett/ITD	$ 180,000	by 2025
Bridge and Culvert Improvements				
1	Main Street Farmers Coop Canal Bridge	Emmett	$ 1,110,000	by 2025
*** Cost listed in ITD ITIP**				

Detailed cost estimates are presented in Appendix L.

7.3 Master Street Plan Map

A Master Street Plan Map was developed to incorporate the findings and recommendations of this study. It shows potential future functional classifications, potential new roadways, and capital improvement projects. It is intended to be used for guiding development and carrying out improvements to the transportation system. The map is shown in Figure 37 on page 85 and another version of the same map with aerial imagery in Figure 38 on page 86.

THIS PAGE INTENTIONALLY LEFT BLANK

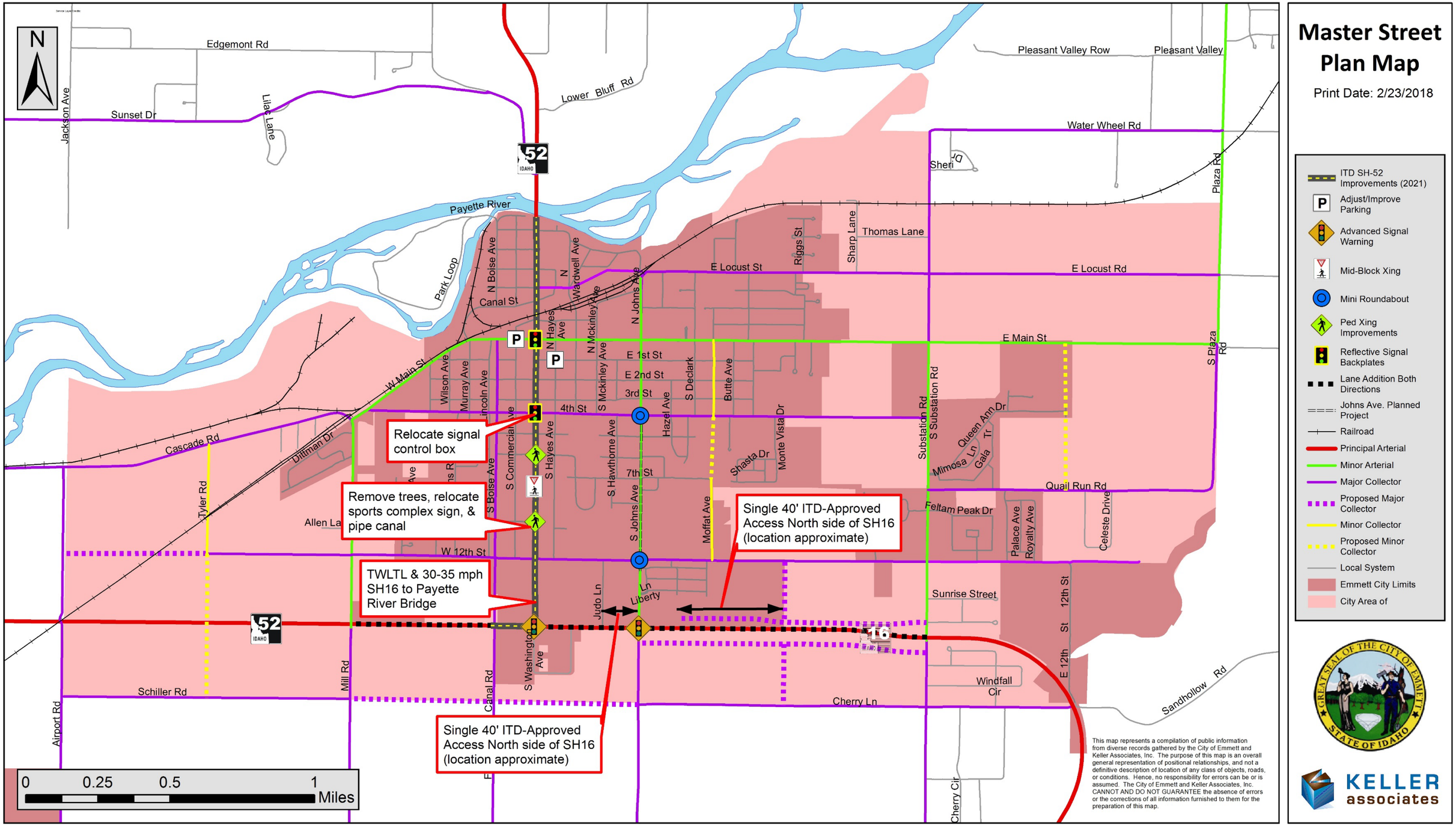

Figure 37 - Master Street Plan Map

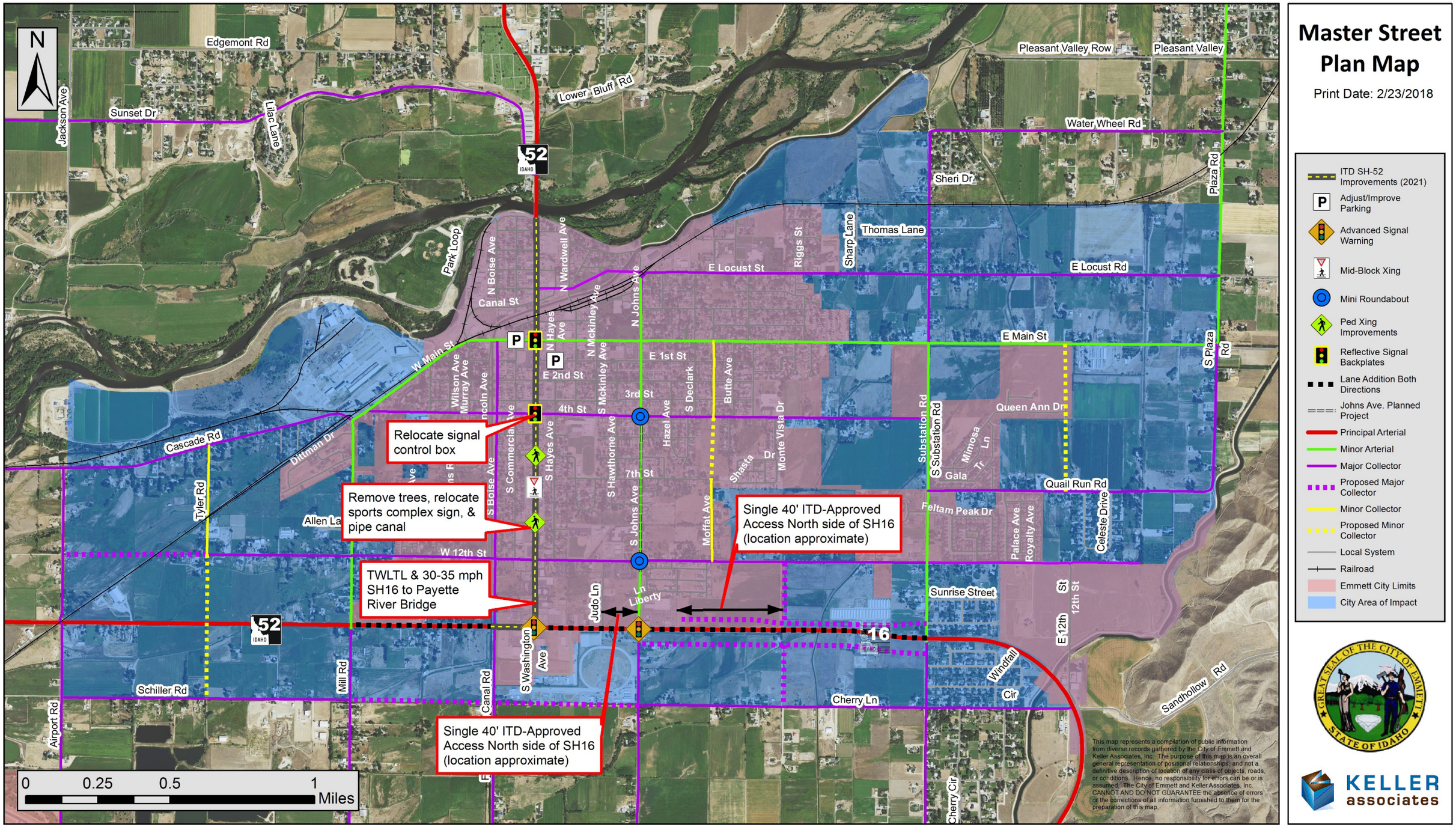

Figure 38 - Master Street Plan Map (Aerial)

Chapter 8 - Funding

Many sources of project funding are available to Emmett. These funding opportunities vary by type of project, project size, and local match. Available funding sources are detailed below.

Local Funding

- Idaho Users Revenue Fund
- Impact Fees
- Property Taxes

State and Federal Funding

- Surface Transportation Program (STP) Urban
- Local Highway Safety Improvement Program (LHSIP)
- Transportation Alternatives Program (TAP)

8.1 Local Funding

The most prevalent forms of funding for local (county and city) roadway needs are listed below.

8.1.1 Idaho Users Revenue Fund

Idaho Users Revenue Fund is the primary source for ongoing roadway maintenance and rehabilitation. The funds are collected by the state in the form of motor fuel taxes and license fees. This money is then distributed annually to all governmental units responsible for roadway maintenance based on a formula that considers population and number of roadway miles in the jurisdiction.

8.1.2 Impact Fees

The number of county and city jurisdictions that are imposing impact fees on development is increasing. To do so it is necessary to determine the ultimate (build-out) improvement needs, the proportion related to new development, and a fee schedule based on a rational connection between development-induced needs and fees. This can be an important source of revenue. However, rarely does this source of revenue pay for the full cost of constructing the roadway system and fees are usually not applicable for maintenance functions. Furthermore, it is only effective in areas experiencing sustained growth. Consequently, it may not be a viable option for Emmett at this time.

8.1.3 Property Taxes

Property taxes are the primary means by which local governments raise money to provide services. They are also perhaps the most politically unpopular method. It is increasingly clear that all forms of funding (state and local) will need to be increased as roadway needs continue to grow.

8.2 State and Federal Funding

Much of the information on State and Federal Funding presented below is available on the Local Highway Technical Assistance Council's (LHTAC's) website. State and Federal funding programs are being updated constantly, so check their website at http://www.lhtac.org for the latest information.

8.2.1 Surface Transportation Program (STP) Urban

Surface Transportation Program (STP) Urban Funds are allocated for projects in urban areas, and in cities with populations above 5,000, excluding MPO areas. They may be used for new construction, reconstruction or rehabilitation of roadways, transportation planning, and corridor studies. Roads must be functionally classified with FHWA as **major collectors** or **higher** with a small percentage allowed for **minor collectors**. STP funds can also be used for activities such as transportation planning and corridor studies. The local match requirement is 7.34 percent. The Idaho Transportation Board has designated approximately $2 million annually for the Program. The funds are awarded through the Local Federal-aid Incentive Program administered by LHTAC.

Eligible projects are identified, prioritized, and requested by the Local Highway Jurisdictions through a formal biennial project application process, November through February. Project proposals are reviewed and ranked by LHTAC and a prioritized list of projects, based on funding, is then presented to the Idaho Transportation Board for inclusion in the draft Statewide Transportation Improvement Program (STIP) in June.

8.2.2 Local Highway Safety Improvement Program (LHSIP)

Beginning in 2014, the Idaho Transportation Investment Program (ITIP) has approximately $4 million available for the Local Highway Safety Improvement Program (LHSIP). This money is the Local Highway Jurisdictions' (LHJ) portion of the state's Highway Safety Improvement funds. Funds are for projects to improve the safety at single site locations or for utilizing a systemic approach in multiple locations. The local or state match requirement is 7.34 percent.

Funds are distributed based on ITD District and an analysis of highway miles, vehicle miles traveled, and 5-year crash data (requires fatality or serious injury crashes). Eligible jurisdictions are notified in writing by LHTAC staff and receive applications and project identification instructions. Projects are ranked according to individual benefit/cost ratios. Projects are funded based first on their benefit/cost ratio within their ITD District, and then by their overall benefit/cost ratio throughout the state.

Final project selection is by the Idaho Transportation Board.

8.2.3 Transportation Alternatives Program (TAP)

The Transportation Alternatives Program (TAP), formerly known as Community Choices for Idaho (CC4I) provides for a variety of alternative transportation projects to address the needs of non-motorized users and to advance ITD's strategic goals of mobility, safety, and economic opportunity while maximizing the use of federal funds. The program provides an annual mechanism to solicit locally-identified projects and leverage potential federal funding opportunities for sponsored projects. TAP provides maximum funding of $500,000 for infrastructure projects and $60,000 for non-infrastructure projects. Both types of projects

require a 7.34% local match. More information on the TAP program can be found on ITD's website at http://itd.idaho.gov/ContractingServices/TAP/default.htm.

Chapter 9 - Updates to the Transportation Plan

This transportation plan is intended to be a living document the City of Emmett can use to make decisions regarding transportation related concerns. In order for it to be most effective, it is recommended that city personnel revisit it on a regular basis. As Capital Improvement Projects are carried out, the CIP should be updated. The pavement and sign management plans should be updated on a regular basis. **The transportation plan should be formally updated every five years.**

9.1 Capital Improvement Plan Updates

The CIP should be revisited on a yearly basis and as projects are carried out or modified. At the very least, it should be updated every 3 years as projects are completed or changed.

9.2 Pavement Management Plan Updates

The pavement management plan should be updated on a regular basis. Maintenance activities should be recorded as they are performed. Cost information should be kept track of as well. Such information will allow for more accurate budgeting estimates and deterioration predictions.

The pavement inventory in iWorQ should be updated as work is performed; a condition survey should take place every 3 years. City personnel should be trained to conduct the pavement condition surveys through the T2 Road Scholar program or other sources. One approach is that approximately one third of the Emmett street network be inspected each year. That way the entire network is inspected in 3 years. Such a system enables accurate and up to date records for grant and funding applications.

9.3 Sign Management Plan Updates

It is important that records in the sign inventory be updated as signs and supports are upgraded, replaced, or removed. As discussed in Section 4.3.2 agencies are required by FHWA to implement and continue to use a sign management plan. Management of the sign network is facilitated through iWorQ and the records therein should be updated regularly.

City personnel should receive training through the T2 Road Scholar program on conducting visual inspections for maintaining compliance with FHWA and MUTCD mandated retroreflectivity requirements. The sign management plan should be updated yearly during the spring sign inspection and as work is performed and revisited after no more than 2 years.

THIS PAGE INTENTIONALLY LEFT BLANK

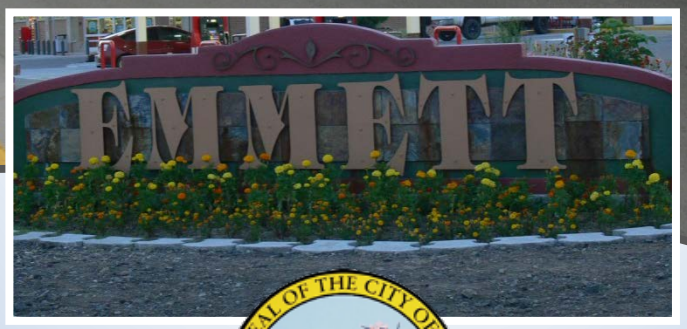

City of Emmett Transportation Plan

APPENDICES

KELLER associates

210022-016

THIS PAGE INTENTIONALLY LEFT BLANK

Appendix A

Access Management Plan

THIS PAGE INTENTIONALLY LEFT BLANK

January 2017

ACCESS MANAGEMENT GUIDELINES

Prepared by Keller Associates

Project no: 210022-016/005

CITY OF EMMETT

Get there!

KELLER associates

THIS PAGE INTENTIONALLY LEFT BLANK

Table of Contents

1.0 Introduction 1

1.1 A Note on State Highway Access 1

2.0 Principles of Access Management 2

3.0 Roadway Functional Classification 5

3.1 Concepts 5

4.0 Access Spacing 9

4.1 Signalized Intersections 9

4.2 Unsignalized Intersections and Driveways 10

4.3 Median Openings 11

4.4 Roundabouts 12

4.5 Grade Separations 12

5.0 Design Standards 14

5.1 Street Cross-Section Characteristics 14

5.2 Sight Distance 15

5.3 Deceleration and Turning Lanes 16

6.0 Implementing the Access Management Guidelines 19

6.1 Access Permits 19

6.2 Community Plans, Zoning, and Subdivision Regulations 22

6.3 Traffic Impact Studies 22

6.4 Existing Problem Areas 28

Appendix A Turn Lane Warrants 1

Appendix B Traffic Impact Study Report Format Requirements 1

THIS PAGE INTENTIONALLY LEFT BLANK

1.0 INTRODUCTION

In response to the need for consistent and effective access management policies within the city and surrounding area of impact, the City of Emmett has commissioned the preparation of an Access Management Plan as part of updated roadway design standards and an overall transportation planning effort. This report defines the overall concept of access management, reviews current practice in Emmett, and establishes basic policy, planning, and design guidelines. The concepts presented here are consistent with guidelines established by the Federal Highway Administration (FHWA), the American Association of State Highway and Transportation Officials (AASHTO), the Transportation Research Board (TRB), and the Institute of Transportation Engineers (ITE).

These guidelines try to balance the need to provide a safe and efficient roadway system and the need to provide access to residential and commercial property. This balance is complicated in that most of the city is already developed and most access points already exist. These guidelines are written to promote the evolution of improvement to existing access conditions over a period of time.

The guidelines not only provide standards that will protect roadway function and provide reasonable access, they also allow for flexibility to accommodate existing conditions. They include information regarding operational parameters associated with a guideline value and source data showing similar guidelines adopted by other agencies. This information is provided to support informed decisions when variances are needed.

The developer and community are encouraged to use these sources and guidelines to assess the best possible access location for each site given the existing and anticipated conditions of the site and adjacent roadway.

Steering and coordination of the access management planning efforts involved engineering staff from Keller Associates and City of Emmett personnel listed below. This committee guided the development of these guidelines.

- Gordon Petrie –Mayor
- Bruce Evans –Public Works Superintendent
- Clint Seamons – Assistant Public Works Superintendent
- Justin Walker, P.E. – Keller Associates, Project Manager
- Stephen Lewis, P.E., PTOE – Keller Associates, Senior Transportation Engineer
- Jordan Crane, E.I. – Keller Associates, Project Engineer
- Jeff Sorenson – Keller Associates, Engineering Intern

The Emmett City Council approved this access management plan on _____.

1.1 A NOTE ON STATE HIGHWAY ACCESS

The Idaho Transportation Department (ITD) controls access on state and federal facilities in Idaho. Any access management aspect pertaining to state and federal highways should follow ITD requirements and access management policy. It is important to note ITD has purchased right-of-way and access rights on State Highway 16 through Emmett on both the north and south sides of the highway from Substation Road to Juno Road. To preserve the mobility on State Highway 16 and in accordance with future plans for a separated highway configuration, ITD is unable to allow new access to the highway, with the exception of the following:

- One 40’ access on the north side of SH-16 between Johns and Judo

- One 40' access on the north side of SH-16 west of the Drainage District #1 ditch

No access points are available on the south side of SH-16 except for existing access points.

2.0 PRINCIPLES OF ACCESS MANAGEMENT

Growing traffic congestion, concerns over traffic safety, and the increasing cost of upgrading roads and related infrastructure have generated interest in managing the access to not only the highway system, but to surface streets as well. Access management is the process that provides access to land development while simultaneously preserving the flow of traffic on the surrounding road system in terms of safety, capacity, and speed. Access management attempts to balance the need to provide good mobility for through-traffic with the requirements for reasonable access to adjacent land uses.

The most important concept in understanding the need for access management is that *movement of traffic and access to property are mutually exclusive*. No facility can move traffic very well *and* provide unlimited access at the same time. Figure 1 on page 3 shows the relationship between mobility, access, and the functional classification of streets. The extreme examples of this concept are the freeway and the cul-de-sac: freeways move traffic very well with few opportunities for access, while cul-de-sacs have unlimited opportunities for access, but do not move traffic very well. In many cases, crashes and congestion are the result of streets attempting to facilitate both mobility and access at the same time.

A good access management program will accomplish the following:

1. ***Limit the number of conflict points at driveway locations.*** Conflict points are good indicators of the potential for crashes. The more conflict points that occur at an intersection, the higher the potential for vehicular crashes. When left turns and cross street through-movements are restricted, the number of conflict points is significantly decreased.
2. ***Separate conflict areas.*** Intersections created by public streets and driveways represent basic conflict areas. Adequate spacing between intersections allows drivers to react to one intersection at a time and reduces the potential for conflicts.
3. ***Reduce the interference of through- traffic.*** Through-traffic often needs to slow down for vehicles exiting, entering, or turning across the roadway. Providing turning lanes, designing driveways with large turning radii, and restricting turning movements in and out of driveways allows turning traffic to get out of the way of through-traffic.
4. ***Provide sufficient spacing for at-grade, signalized intersections.*** Good spacing of signalized intersections reduces conflict areas and increases the potential for smooth traffic progression.
5. ***Provide adequate on-site circulation and storage.*** The design of good internal vehicle circulation in parking areas and on local streets reduces the number of driveways that businesses need for access to the major roadway.

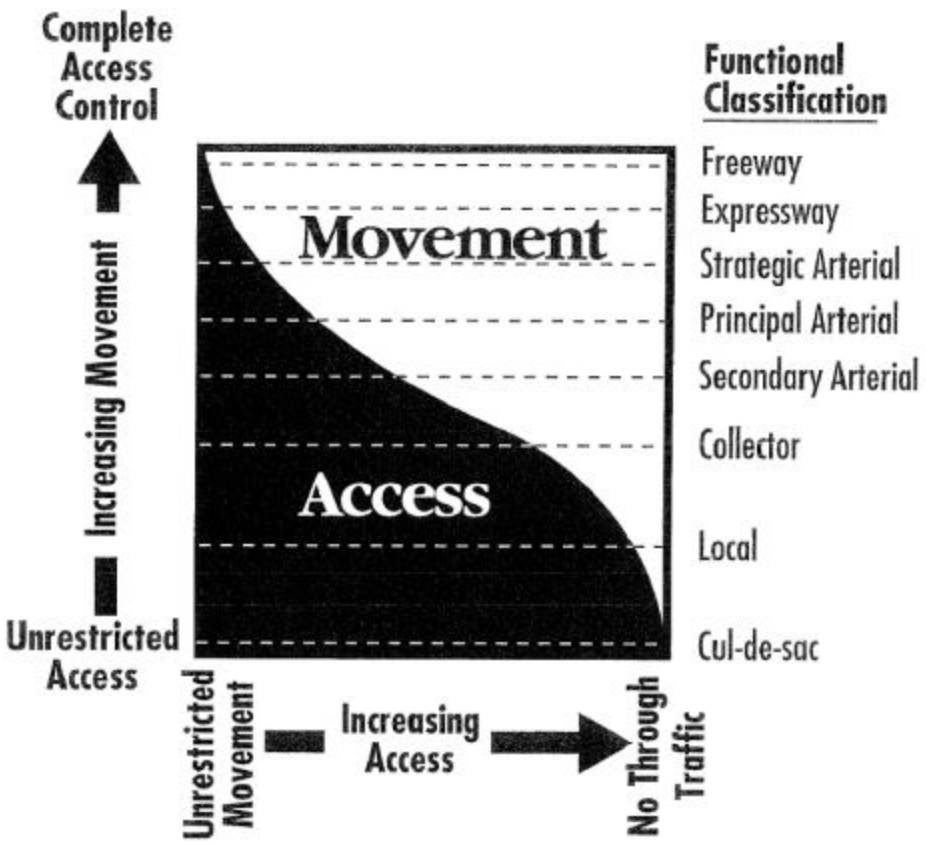

Figure 1 - Movement vs. Access

The typical "vicious circle" of traffic congestion found in many areas of the country is shown in Figure 2 on page 4. Access management attempts to put an end to the seemingly endless cycle of road improvements followed by increased access, increased congestion, and the need for more road improvements.

Poor planning and inadequate control of access can quickly lead to an unnecessarily high number of direct accesses along roadways. The movements that occur on and off roadways at driveway locations when those driveways are too closely spaced can make it difficult for through-traffic to flow smoothly at desired speeds and levels of safety. AASHTO states "the number of accidents is disproportionally higher at driveways than at other intersections…thus their design and location merits special attention." Studies have shown that anywhere between 50 and 70% of all crashes that occur on the urban street system are access-related.

Fewer direct accesses, greater separation of driveways, and better driveway design and location are the basic elements of access management. When these techniques are implemented uniformly and comprehensively, there exists less occasion for through-traffic to brake and change lanes in order to avoid turning traffic.

Consequently, good access management allows for smoother flow of traffic and higher average travel speeds. There will be less potential for crashes. According to the FHWA, before and after analyses show routes with well-managed access can experience 50% fewer crashes than comparable facilities with no access controls.

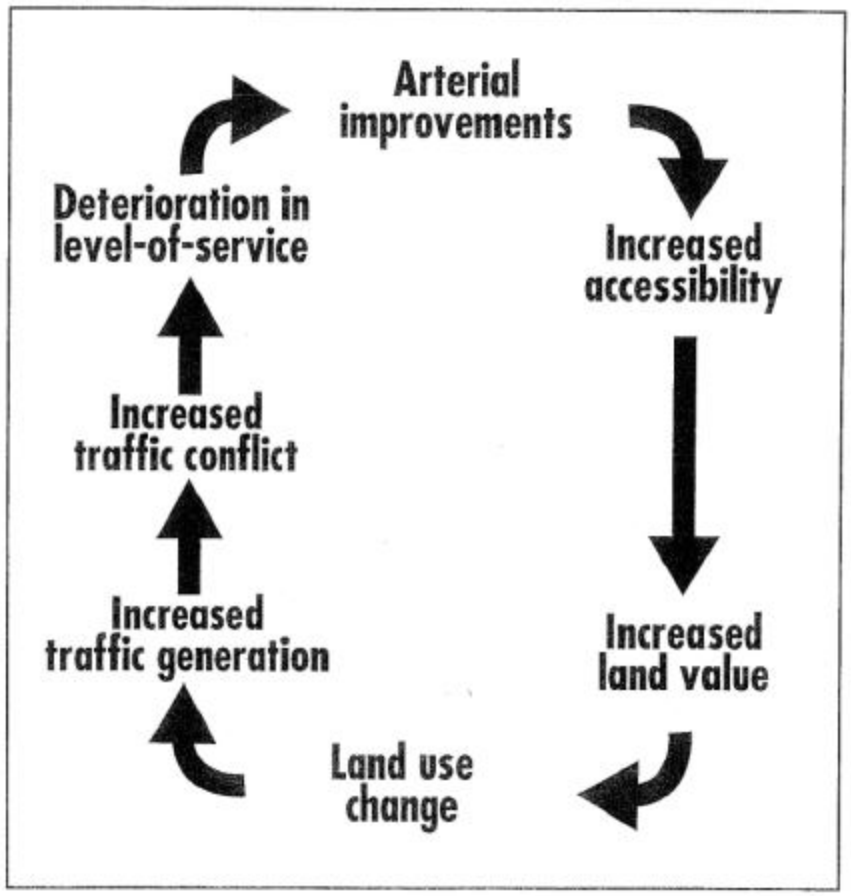

Figure 2 - Cycle of Traffic Congestion

3.0 ROADWAY FUNCTIONAL CLASSIFICATION

Roadways are classified into a logical hierarchy according to function and travel context. Anticipated right-of-way widths are defined based on these classifications.

3.1 CONCEPTS

Access spacing should recognize that access and mobility are competing functions. This recognition is fundamental to the design of roadway systems that preserve public investments, contribute to traffic safety, reduce fuel consumption and vehicle emissions, and do not become functionally obsolete. Suitable functional design of the roadway system also preserves the private investment in residential and commercial development.

The 2011 AASHTO Policy on Geometric Design of Highways and Streets ("Green Book") recognizes that a functionally-designed circulation system provides for distinct travel stages. It also indicates that each stage should be handled by a separate facility and that "the failure to recognize and accommodate by suitable design each of the different stages of the movement hierarchy is a prominent cause of highway obsolescence." The AASHTO policy also indicates that the same principles of design should be applied to access drives and comparable street intersections.

A typical trip on an urban street system can be described as occurring in identifiable steps or stages as illustrated in Figure 3 on page 6. These stages can be sorted into a definite hierarchy with respect to how the competing functions of mobility and access are satisfied. At the low end of the hierarchy are highway facilities that provide good access to abutting properties, but provide limited opportunity for through-movement. Vehicles entering or exiting a roadway typically perform the ingress or egress maneuver at a very low speed, momentarily blocking through-traffic and impeding the movement of traffic on the roadway. At the high end of the hierarchy are facilities that provide good mobility by limiting and controlling access to the roadway, thereby reducing conflicts that slow the flow of through-traffic.

A transition occurs each time that a vehicle passes from one roadway to another and should be accommodated by a facility specifically designed to handle the movement. Even the area of transition between a driveway and a local street should be considered as an intersection and be treated accordingly. However, design of these intersections poses few problems since speeds and volumes are low. Many urban circulation systems use the entire range of facilities in the order presented here, but it is not always necessary or desirable that they do so.

Highway specialization means using each individual street facility to perform the desired mix of the functions of access or management. This is accomplished by classifying highways with respect to the amount of access or mobility they are to provide and then identifying and using the most effective facility to perform that function.

The functional system of classification divides streets into three basic classes identified as arterials, collectors, and local streets. The function of an arterial is to provide for mobility of through-traffic. Access to an arterial is controlled to reduce interferences and facilitate through-movement. Collector streets provide a mix for the functions of mobility and access, and therefore accomplish neither well. The predominant purpose of local streets is to provide good access. Driveways create intersections with the street system.

Each class of roadway has its own geometric, traffic control, and spacing requirements. The general types of facilities and their characteristics are summarized in Table 1 on page 7. This table provides a broad guide in setting access spacing standards that are keyed to functional classes of roadways.

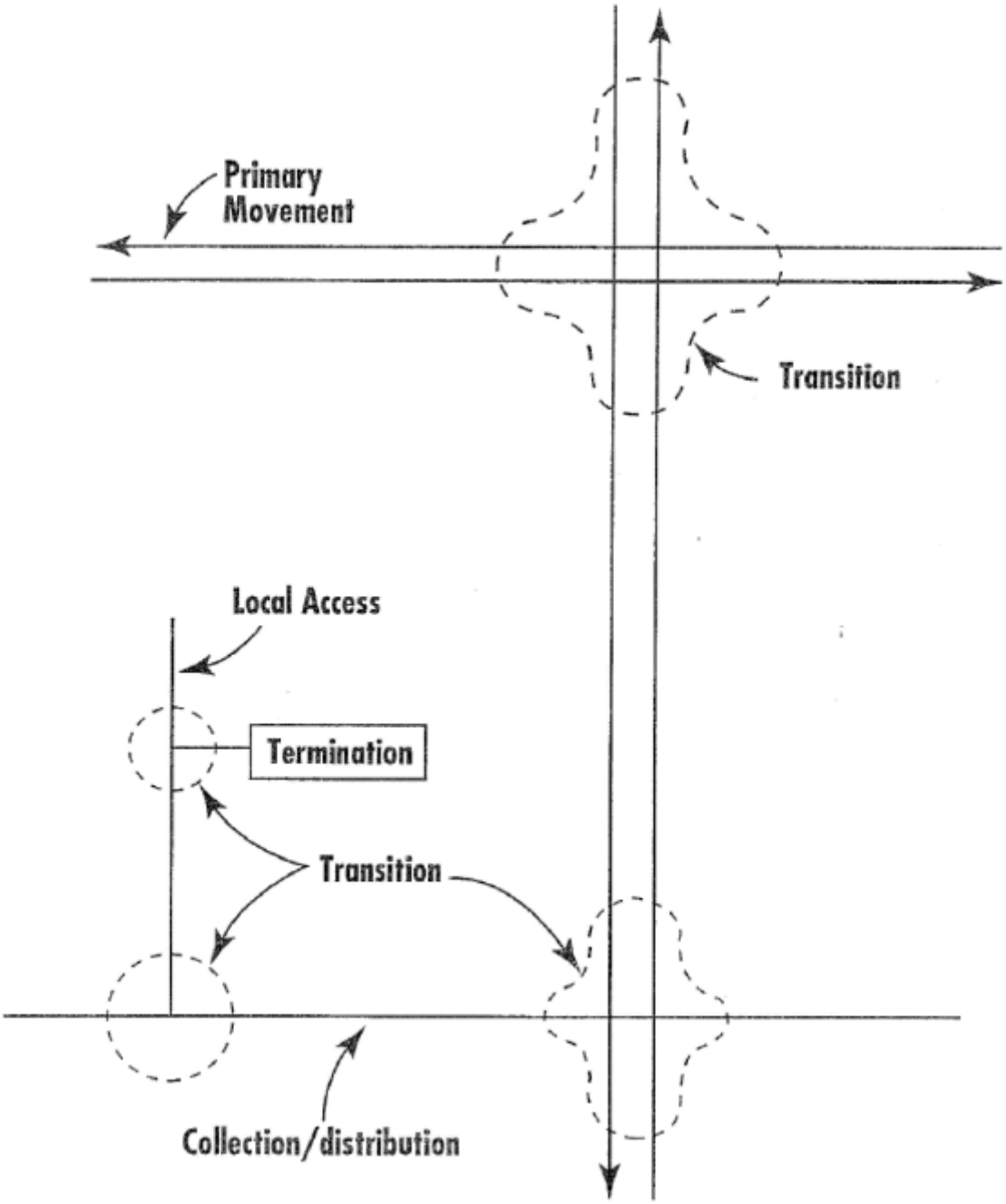

Figure 3 - Hierarchy of Movement in a Functional Circulation System

Table 1 - Functional Classifications and Definitions

Characteristic	Functional Classification				
	Freeway and Expressway	**Principal Arterial**	**Minor Arterial**	**Collector**	**Local**
Function	Traffic Movement	Traffic movement, land access	Traffic movement, land access	Collect and distribute traffic between streets and arterials, land access	Land access
Typical % of Surface Street System Mileage	Not Applicable	5-10%	10-20%	5-10%	60-80%
Continuity	Continuous	Continuous	Continuous	Not necessarily continuous	None
Spacing	4 miles	1-2 miles	1/2 - 1 mile	1/2 mile or less	As needed
Typical % of Surface Street System Vehicle-miles Carried	Not Applicable	40-65%	25-40%	5-10%	10-30%
Direct Land Access	None	Limited: major generators only	Restricted: some movements prohibited; # and spacing of driveways controlled	Safety controls; limited regulation	Safety controls only
Minimum Roadway Intersection Spacing	1 mile	1/2 mile	1/4 mile	300 feet	300 feet
Speed Limit	45-75 mph	35-45 mph in fully developed areas	30-35 mph	25-30 mph	25 mph
Parking	Prohibited	Prohibited	Generally prohibited	Limited	Permitted
Comments	Supplements capacity of arterial street system & provides high-speed mobility		Backbone of street system	Through-traffic should be discouraged	Through-traffic should be discouraged

The functional classification of roads in the Emmett area, as currently recognized by ITD and FHWA, is shown in Figure 4 on page 8.

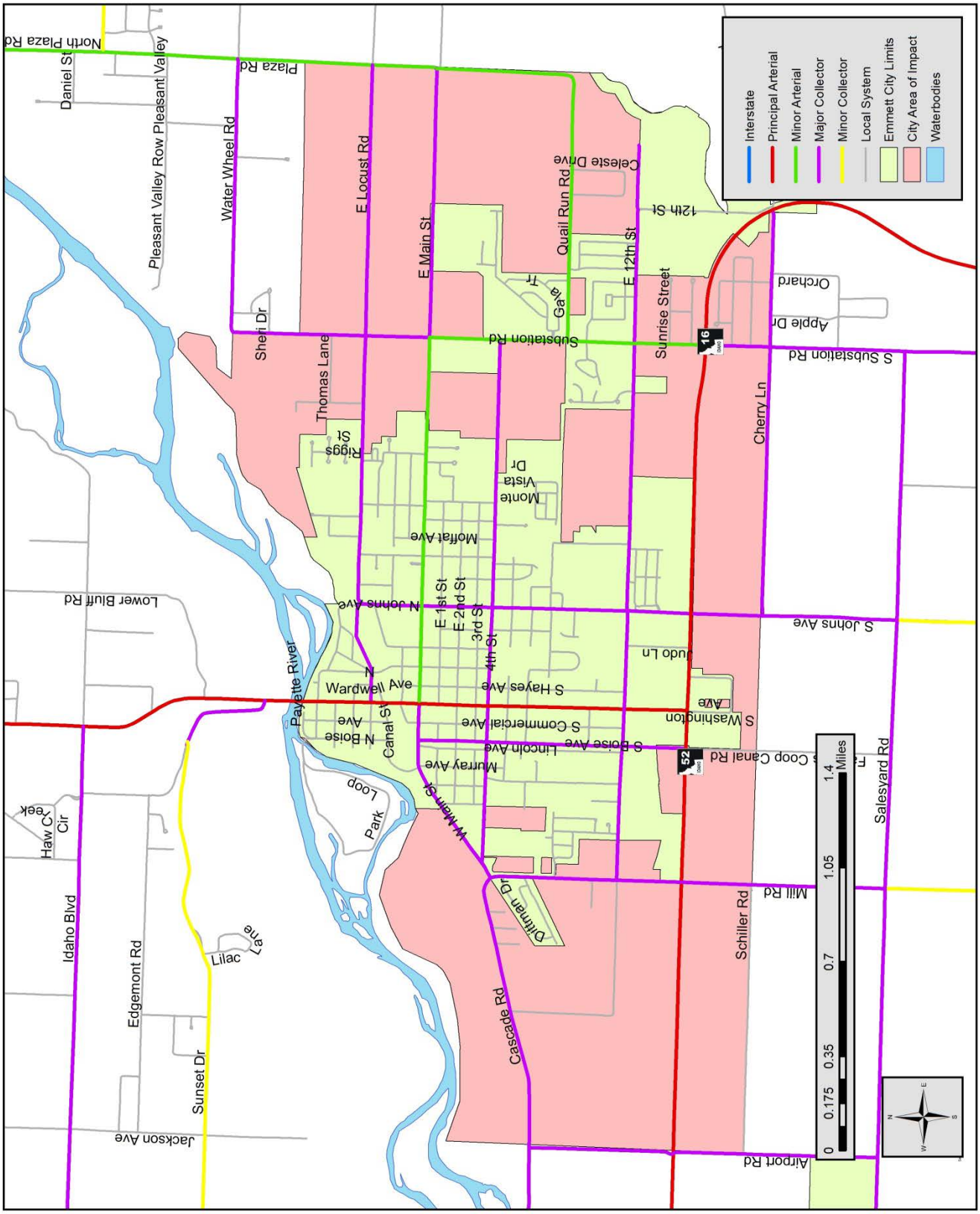

Figure 4 - ITD 2025 Functional Classification

4.0 ACCESS SPACING

Access spacing guidelines should be linked to allowable access levels, roadway speeds, and operating requirements. They should apply to new developments and to significant changes in the size and nature of existing developments. They do not have to be consistent with existing practices. Because of historical conditions, access to land parcels that do not conform to the spacing criteria may be necessary when no alternative reasonable access is provided; however, the basis for these variances should be clearly indicated. Access spacing specified in this chapter is measured from nearside to nearside, unless otherwise noted.

4.1 SIGNALIZED INTERSECTIONS

Cycle lengths[1] should be as short as possible and lengths of more than 120 seconds should be avoided. Excessively long cycle lengths result in long vehicle queues and delays. They indicate a need for corrective actions such as interchanges, rerouting left turns, or improvement of the secondary street system to reduce left-turn volumes.

To ensure efficient traffic flow, new signals should be limited to locations where the progressive movement of traffic will not be significantly impeded. Uniform, or near uniform, spacing of signals is essential to the progression of traffic. The "optimum" distance between signals depends on the cycle length and the prevailing speed, as shown in Table 2. However, as a minimum, signals should be spaced no closer than one-quarter mile (1,320 feet) on minor arterial streets and one-third mile (1,760 feet) to one-half mile (2,640 feet) on principal arterial streets.

Table 2 – Optimum Spacing of Signalized Intersections[2]

Cycle Length (seconds)	Signal Spacing (feet) by Speed						
	25 mph	30 mph	35 mph	40 mph	45 mph	50 mph	55 mph
60	1,100	1,320	1,540	1,760	1,980	2,200	2,420
70	1,280	1,540	1,800	2,050	2,310	2,570	2,820
80	1,470	1,760	2,050	2,350	2,640	2,930	3,230
90	1,630	1,980	2,310	2,640	2,970	3,300	3,630
120*	2,200	2,640	3,080	3,520	3,960	4,400	4,840

Note: Distances below the line are undesirably long spaces.
*Longest recommended length.

4.1.1 DEVIATION FROM OPTIMAL SIGNAL SPACING INTERVALS

Where signal spacing is already established or when obtaining long and uniform signal spacing is difficult, progression can be maintained by increasing the percentage of cycle length devoted to the major arterial, with a comparable decrease in green time for the intersecting street. As a general rule, the Transportation Research Board (TRB) recommends that *for each 1% deviation in intersection spacing, an increase in green time for the major street of 1% and a decrease in green time for the minor street of 1% should be implemented*. However, for long cycles (such as 120 seconds), the green time on the major street, and red time on the minor street would need to be increased 2% for each 1% deviation. This deviation rule is less important for lower classification roads. In general, the magnitude of acceptable deviation from optimal signal spacing intervals may increase as the roadway functional classification decreases.

[1] Cycle Length is defined as the total time for the signal to complete one cycle, which is one complete sequence of signal indications
[2] Source: Transportation Research Board, *Access Management Manual, 2nd Ed.* (2014)

4.2 UNSIGNALIZED INTERSECTIONS AND DRIVEWAYS

Unsignalized driveways are far more common than signalized driveways. They affect all kinds of activity, not merely large activity centers. Traffic operational factors leading toward wider spacing of driveways (especially medium- and higher-volume driveways) include weaving and merging distances, stopping sight distance, acceleration rates, and storage distance for back-to-back left turns. From a spacing perspective, these driveways should be treated the same as public streets.

Strict application of traffic engineering criteria may push spacing requirements to 500 feet or more. However, such spacing may be unacceptable for economic development in many suburban and urban environments, where development pressures opt for 100- to 200-foot spacing.

Several approaches to unsignalized intersection spacing include consideration of: independent access connections, upstream functional distance, turn lane design, safety, stopping sight distance, intersection sight distance, decision sight distance, right-turn conflict overlap, and egress capacity. The National Cooperative Highway Research Program (NCHRP) Report 348 *Access Management Guidelines for Activity Centers* provides guidelines for access spacing based on functional classification, speed limit, and type of activity generator. These are recommended for Emmett and are given in Table 3. To use the table multiply the posted speed limit (or prevailing speed) of the road to be accessed by the given multiplier for the appropriate activity level.

Table 3 - Unsignalized Access Spacing Guidelines for Driveways[3]

Functional Classification of Street	Minimum Driveway Spacing (feet) as a Multiple of Posted Speed		
	Minimum Use [a]	Minor Generator [b]	Major Generator [c]
Expressway	[d]	[d]	[d]
Principal Arterial	4-5	7-8	9-10
Minor Arterial	3-4	5-6	7-8
Collector	2-3	4-5	5-6

[a] less than 50 vehicle trips per day or 5 trips in the peak hour (two-way total)

[b] 51 to 5,000 vehicle trips per day or less than 500 trips in the peak hour (two-way total)

[c] over 5,000 vehicle trips per day or over 500 trips in the peak hour (two-way total)

[d] determined by interchange or cross-street spacing; no direct access allowed

The lower number for a given activity level is the minimum spacing multiple while the higher number is the preferred spacing multiple. For example, for a minor generator with access to a collector road with a posted speed of 35 mph, the preferred spacing is 175 feet between driveways (35 multiplied by 5), but 140 foot spacing (35 multiplied by 4) is allowable when the preferred 175 feet is not practical.

Unsignalized spacing standards should be used to determine the minimum acceptable distance between driveways and between driveways and public streets. The spacing between signalized at-grade intersections and driveways or unsignalized public streets should also be based on the distances in Table 3. In applying these guidelines, it is necessary to consider adjacent land use in computing the generator size, including development across the street. It is not good practice to look at generators in isolation.

[3] Source: National Cooperative Highway Research Program (NCHRP), Report 348 *Access Management Guidelines for Activity Centers*, (1992)

The guidelines should apply to both private driveways and unsignalized public streets where there is little likelihood for future signalization. Where signalization is imminent or likely, the signal spacing guidelines should govern activity.

The spacing of right-turn access on each side of a divided roadway can be treated separately. However, where left turns at median breaks are involved, the access on both sides should line up or be offset from the median break by at least 300 feet.

On undivided roadways, access on both sides of the road should be aligned. Where this is not possible, driveways should be offset by at least 150 to 200 feet when two minor traffic generators are involved, and 300 to 400 feet when two major traffic generators are involved.

4.2.1 ACCESS CONTROL AT DRIVEWAYS

This section is a summary of criteria for access control as they apply to individual developments, typically in the form of driveways (minor intersections). Typical access control requirements for arterials (principal and minor) and major collectors are as follows:

1. No driveway access shall be allowed for any residential lot
2. No driveway access shall be allowed within 150 feet of the nearest right-of-way line of an intersecting street
3. Unless otherwise approved by the City, access shall be limited to one driveway for each tract of property separately owned. Properties contiguous to each other and owned by the same person are considered to be one tract.
4. Driveways giving direct access may be denied if alternate access is available.
5. When necessary for the safe and efficient movement of traffic, access points may be required to be designed for right turns in and out only.
6. When approved or directed by the City, a driveway access design may be a “street type intersection” with curb returns.

4.3 MEDIAN OPENINGS

Median openings are provided at all signalized at-grade intersections. They are also generally provided at unsignalized junctions of arterial and collector streets. They may be provided at driveways where they will have minimum impact on roadway flows.

The spacing of median openings for signalized driveways should reflect traffic signal coordination requirements and the storage space needed for left turns. Minimum desired spacing of unsignalized median openings at driveways as a function of speed is given in Table 4. This spacing best applies to retrofit situations.

Table 4 - Minimum Spacing Between Unsignalized Median Openings[4]

Speed (mph)	Minimum Spacing (feet)
30	370
35	460
40	530
45	670
50	780
55	910

The spacing of median openings for unsignalized driveways should be based on the values suggested in Table 5. Ideally, spacing of breaks should be conductive to signalization. Median openings for left-turn entrances (where there is no left-turn exit from the activity center) should be spaced to allow sufficient storage for left-turning vehicles.

Table 5 - Guidelines for Spacing of Unsignalized Median Openings[5]

Street Functional Classification	Median Opening Spacing (feet)		
	Urban	Suburban	Rural
Expressway	N/A	N/A	N/A
Principal Arterial	660	660	1320
Minor Arterial	660	[a]	[a]
Collector	330	660	1320

[a] function of traffic signal spacing requirements

Median openings at driveways can be subject to closure where volumes warrant signals, but signal spacing would be inappropriate. Median openings should be set far enough back from nearby intersections to avoid possible interference with intersection queues. In all cases, storage for left turns must be adequate.

4.4 ROUNDABOUTS

As stated in the TRB *Access Management Manual*, roundabouts prevent conflicts in the physical area of an intersection and are an ideal way to provide for U-turns. Roundabouts, combined with raised median treatments, extend the safety and operational benefits to an entire corridor. Where two or more roundabouts are provided on a developed corridor where access control is desired, a median should be installed, and turning and crossing maneuvers should be accommodated via the roundabouts.

In terms of access spacing guidelines, roundabouts should be considered the same as signalized intersections on arterials.

4.5 GRADE SEPARATIONS

Interchanges in an access management context provide several important functions. They enable the signal green time to be maximized along expressways and principal arterials. They also allow access to large activity centers where such access might be precluded by traffic signal spacing criteria.

More specifically, a grade separated interchange may be appropriate in the following situations:

[4] Ibid.
[5] Ibid.

1. Where two expressways cross, or where an expressway crosses arterial roads;
2. Where principal arterials cross and the resulting available green time for any route would be less than 40 to 50 percent;
3. Where an existing at-grade signalized intersection along an arterial roadway operates at level of service (LOS) F, and there is no reasonable improvement that can be made to provide sufficient capacity
4. Where a history of accidents indicates a significant reduction in accidents can be realized by constructing a grade separation
5. Where a new at-grade signalized intersection would result in LOS E in urban and suburban settings and LOS D in rural settings;
6. When the location to be signalized does not meet the signal spacing criteria and signalization of the access point would impact the progressive flow along the roadway, and there is no other reasonable access to a major activity center;
7. Where a major public street at-grade intersection is located near a major traffic generator, and effective signal progression for both the through and generated traffic cannot be provided; and
8. The activity center is located along a principal arterial, where either direct access or left turns would be prohibited by the access code, or would otherwise be undesirable

Minimum interchange spacing along various roadways should be as shown in Table 6. Spacing may be closer where access is provided to or from collector-distributor roads. Privately-developed interchanges should become part of a regional transportation plan to ensure they are consistent with local and regional plans.

Table 6 - Minimum Interchange Spacing Guidelines

Street Functional Classification	Minimum Interchange Spacing (miles)	
	Urban/Suburban	Rural
Freeway	1	3
Expressway	1	2
Principal Arterial	½	2

5.0 DESIGN STANDARDS

This chapter presents the appropriate geometric design guidelines to each roadway classification and allowable access point.

5.1 STREET CROSS-SECTION CHARACTERISTICS

Cross-sections are the combination of the individual design elements that constitute the design of the roadway. Cross section elements include the pavement surface for driving and parking lanes, curb and gutter, sidewalks and additional buffer/landscape areas. Right-of-way is the total land area needed to provide for the cross-section elements.

The design of the individual roadway elements depends on the facility's intended use. Roads with higher design volumes and speeds require more travel lanes and wider right-of-way than low volume, low speed roads. Furthermore, the high-use roadway type should include wider shoulders and medians, separate turn lanes, dedicated bicycle lanes, elimination of on-street parking and control of driveway access. For most roadways, an additional buffer area is provided beyond the curb line. This buffer area accommodates the sidewalk area, landscaping, and local utilities. Locating the utilities outside the traveled way minimizes traffic disruption if utility repairs or service changes are required.

The hierarchy of cross sections provided are for local (2 lanes), minor collectors (3 lanes), major collectors (3 lanes), and arterial roadways (5 lanes). Typical elements of the roadway cross sections are identified by the following sections. However, few of the dimensions used in street design have been precisely determined by research. Instead, the cross-sections usually represent a consensus of opinion based on operating experience. Therefore, each of the elements of roadway design can be altered to better accommodate various conditions found in the study area.

5.1.1 LOCAL STREETS

Local streets provide direct access to abutting land uses and accommodate local traffic movement. Because of low travel speeds and relatively small traffic volumes, on-street parking is usually permitted and bicycles can be accommodated without a separate travel lane. The cross-section elements for local streets include a 38-foot roadway. This design provides two 11-foot travel lanes plus two eight-foot curb lanes for parking. The typical right-of-way for local roadways is 60 feet.

5.1.2 MINOR COLLECTORS

Collector streets provide for traffic movement between local streets and arterial streets. Collector streets also provide access to abutting land uses. The three-lane minor collector includes a 60-foot roadway cross-section. This provides two 11-foot travel lanes, a 12-foot two-way left-turn lane, two 5-foot bicycle lanes, and two 8-foot curb lanes for parking. The increased width of this type of roadway versus that of the local streets allows for the development of on-street bus stops or a separate right turn lane by eliminating a portion of the on-street parking near the intersection. Due to higher vehicle travel speeds and increased traffic volumes, bicyclists should be accommodated with separate dedicated travel lanes. The typical right-of-way for minor collectors with these design elements is 80 feet.

5.1.3 MAJOR COLLECTORS

The three-lane major collector includes a 64-foot roadway cross section. This design provides for two 12-foot travel lanes, a 14-foot two-way left-turn lane, two 5-foot bicycle lanes, and two 8-foot curb lanes for parking. The wider median and bike lanes help to accommodate higher traffic speeds, a major difference from the three-lane minor collector street. The typical right-of-way for major collector roadways with these design elements is approximately 90 feet.

5.1.4 ARTERIALS

Arterial streets provide for major through-traffic movement between geographic areas. These roadways typically have some form of access control that limits the locations of driveways. The minor arterial roadway includes a 74-foot roadway cross section. This allows for a 16-foot center lane for left turns, four 12-foot travel lanes, and two 5-foot bicycle lanes. Due to the potential conflicts with through traffic, there are no lanes for on-street parking. On-street bus stops may interfere with through traffic and bus turnouts may be needed for this design. Any needed right-turn lanes can also be provided with roadway widening into the buffer area. The typical right-of-way for minor arterial roadways with these design elements is 100 feet. Additional buffer beyond the curb line should be provided on principal arterial streets for turnouts and future widening. Typical right-of-way on principal arterial roadways is up to 120 feet.

5.2 SIGHT DISTANCE

Intersections inherently have the potential for several types of vehicular conflicts. The potential for these conflicts can be greatly reduced by providing proper sight distances and appropriate traffic controls. While the avoidance of conflicts and traffic operational efficiency depends on the judgement, capabilities, and response of the individual driver, proper sight distance is essential for vehicles using a roadway. Vehicles should be able to enter and leave a property or intersecting roadway safely with respect to vehicles on the driveway or roadway and vehicles on the intersecting roadway.

Intersection sight distance is the sight distance required such that a vehicle can enter a roadway without unduly affecting traffic operations. Specified areas along intersection approach legs, known as clear sight triangles, should be clear of obstructions that might block a driver's view of potentially conflicting vehicles. Intersection sight distance varies depending on the design speed of the roadway to be entered and intersection configuration. **Sight distances for various intersections and design speeds as specified by the American Association of State Highway and Transportation Officials (AASHTO) should be utilized. These are provided in Chapter 9 of AASHTO's *Policy on Geometric Design of Highways and Streets* (2011 edition)**, commonly called the "Green Book." The most current edition should be utilized. Sight distances should be adjusted with crossroad grade in accordance with the same document.

In many conditions, however, variations in the vertical and horizontal alignment of the adjoining street or limited building setback lines may create situations where the sight distances specified in the Green Book cannot be provided. Consequently, a minimum distance must be provided such that motorists traveling on the through street can perceive, react, and stop for any potential conflict with the driveway's intersection. This minimum measure is defined by the stopping sight distance. Stopping sight distance requirements are also found in AASHTO's Green Book. For reference, Table 7 provides stopping sight distances as found in the Green Book for various speeds and grades.

Table 7 - Stopping Sight Distance

Operating Speed (mph)	Stopping Sight Distances (feet)						
	Street Grade in Percent						
	Upgrades			Level	Downgrades		
	3%	**6%**	**9%**	**0%**	**-3%**	**-6%**	**-9%**
20	109	107	104	115	116	120	126
25	147	143	140	155	158	165	173
30	200	184	179	200	205	215	227
35	237	229	222	250	257	271	287
40	289	278	269	305	315	333	354
45	344	331	320	360	378	400	427
50	405	388	375	425	446	474	507
55	469	450	433	495	520	553	593

Any object at a height above the elevation of the adjacent roadways that would obstruct the driver's view should be removed or lowered if practical. Sight-distance triangles should be free from any visual obstruction; this includes parked vehicles, signs, fences, buildings, and landscaping.

5.3 DECELERATION AND TURNING LANES

It may be necessary to construct turning lanes for right and left turns into an access drive for safety or capacity reasons where highway speeds or traffic volumes are high, or in cases where there are substantial turning volumes. A separate turning lane is used to expedite the movement of through-traffic, increase intersection capacity, permit the controlled movement of turning traffic, and promote the safety of all traffic.

Providing left-turn lanes is essential from both capacity and safety standpoints where left turns would otherwise share the use of a through-lane. Shared use of a through-lane will dramatically reduce capacity, especially when opposing traffic is heavy. Right-turn lanes remove the speed differences in the main travel lanes, thereby reducing the frequency and severity of rear-end collisions. They also increase capacity of signalized intersections and may allow more efficient traffic signal phasing.

5.3.1 TURN LANE WARRANTS

Appendix A contains warrants for left- and right-turn lanes based on speed, advancing and opposing traffic volumes. These figures are from Ada County Highway District (ACHD) and are based on NCHRP Report 279 *Intersection Channelization Design Guide* and NCHRP Report 457 *Evaluating Intersection Improvements*.

5.3.2 TOTAL LENGTH

A separate turning lane consists of a taper plus a full width auxiliary lane. The design of turn lanes is based primarily on the speed at which drivers will turn into the lane, the speed to which drivers must reduce in order to turn into the driveway after traversing the deceleration lane, and the amount of vehicular storage that will be required. Other considerations include the volume of trucks that will use the turning lane and the steepness of an ascending or descending grade.

Although vehicular storage is a principal factor used to establish the full length of a separate turn lane, it may not be the actual determining factor. At off-peak traffic periods no high-speed roads, the lane will function as a deceleration lane.

Vehicles often must come to a complete stop before executing a turn into a driveway or intersecting street (such as when a pedestrian is crossing the intersecting driveway or street). Because of this, the design of turn lanes must be based on the distance required to come to a complete stop. The total distance traveled during a lane change (moving into the turn lane) and the distance traveled during deceleration before coming to a complete stop is defined as the maneuvering distance. Minimum maneuver distance assumes that the driver is in the proper through-lane and only needs to move laterally into the separate turn lane. The maneuver distance permits a turning vehicle to move laterally from the through-lane while it is decelerating. Table 8 presents minimum maneuvering distances for various speeds.

Table 8 – Minimum Maneuver Distances[6]

Speed (mph)	Minimum Distance (feet)
20	70
25	105
30	150
35	225
40	290
45	360
50	440
55	525

It is recommended that a 10:1 bay taper be used to provide a full-width separate turning lane for all posted speed limits. If a two-lane turn lane is to be provided, it is recommended that a 7.5:1 bay taper be used to develop the dual lanes. The bay taper allows for additional storage during short duration surges in traffic volumes. Refer to the current edition of AASHTO's Green Book for further design information on tapers.

The individual elements of separate turn lanes are shown in Figure 5. The distance required for storage length will vary, depending on traffic volumes, the type of traffic control, and signal timing and phasing (if applicable). Required storage length should be calculated by traffic engineering analysis on a case-by-case basis.

[6] Source: Transportation Research Board, *Access Management Manual, 2nd Ed.* (2014), Exhibit 16-18

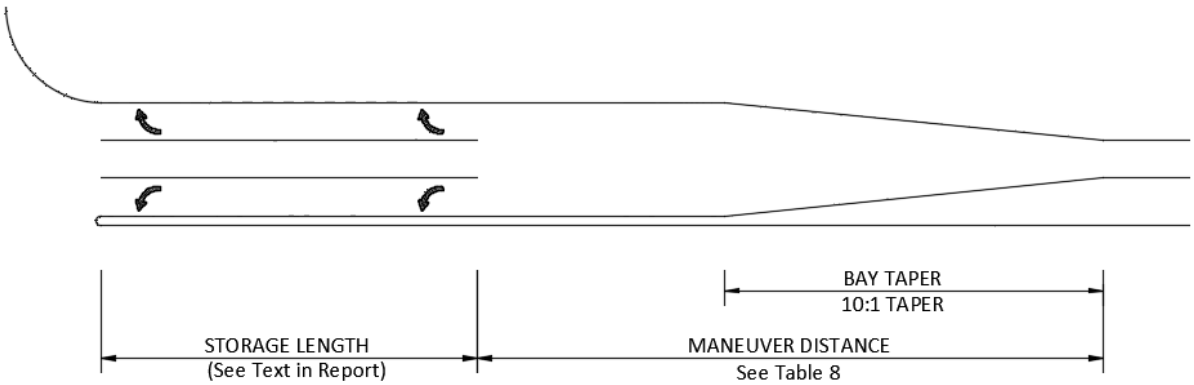

Figure 5 - Deceleration Lane Requirements

It is sometimes necessary to transition through-traffic lanes around left-turn lanes. In such cases, larger transition rates should be used. The transition rate for through traffic should be approximately equal to the operating speed, but never less than half of the operation speed (e.g., for a 40-mph operating speed and a 12-foot offset, the minimum taper would be 20:1 or 240 feet, and the preferred taper would be 40:1 or 480 feet).

6.0 IMPLEMENTING THE ACCESS MANAGEMENT GUIDELINES

This chapter provides policies, regulations, and permitting procedures to implement the Access Management Guidelines.

6.1 ACCESS PERMITS

The principal element controlling access to the roadway system is the access permit procedure. An access permit is a legal document that grants approval to construct and operate a driveway or other access of a certain design at a specified location on a given roadway for specific purposes. Access permits should be required for the construction of any new point of access or the modification of any existing driveway within roadway right-of-way when the work is being done by any person or agency other than the City.

Normally, the City has the discretion to grant or deny an access permit based on the material submitted in comparison to a set of City standards. The City may grant access as requested, require design modifications, or deny access. A variance to applicable codes or criteria can be requested when a proposed access is below desirable standards, but still within engineering and safety minimums.

The application procedure should include guidelines for access denial where alternative access is available, and the alternative is better for overall traffic safety and operation. A determination of the type of traffic control should also follow a selection procedure. The procedure considers:

1. The classification of the roadway to which access is requested
2. The type of access requested relative to the allowable levels and types of access
3. Relevant spacing standards
4. Highway and intersection capacity
5. Geometric design considerations
6. The type of proposed traffic control
7. The need, if required, for any variances to permit criteria

6.1.1 STEPS OF THE APPLICATION PROCESS

The permit application process should go through the following separate phases:

6.1.1.1 INITIAL REQUEST OR INQUIRY

Prior to the initial request for site plan approval or a building permit, the developer should obtain a copy of the access requirements of the City. It is suggested that the developer or his representative contact the City to inform them of development plans that call for roadway access.

6.1.1.2 INITIAL OR PRELIMINARY PROPOSAL

The initial submittal by a developer should include, but not be limited to, a letter of explanation and request for consideration, a preliminary survey plat, a preliminary site plan, and a preliminary traffic impact study. This procedure allows the City to guide the applicant in the preferred direction. (This step can be skipped where a proposal is minor)

6.1.1.3 FINAL SUBMITTAL

Upon review and further detailing of the Site Plan and its revisions to the initial submittal, the developer should submit the final site plan and, if required, necessary support documentation. This documentation can include engineering plans, traffic impact studies, and other supplemental studies and, when required, cost estimates for the proposed access driveway and associated improvements to the adjacent roadways. A performance bond and certificate of insurance also may be required at this time.

6.1.1.4 ACCESS PERMIT ISSUANCE

Upon receipt and approval of the plans, specifications, reports and studies, and other data submitted, the City should issue an access permit and construction may begin. If the request fails to meet established criteria, a formal denial should be submitted to the applicant.

6.1.1.5 FIELD INSPECTIONS

The City should conduct periodic field inspections during the course of construction. Any deficiencies noted by the City should be corrected by the developer before a final inspection. When all work has been satisfactorily corrected, the construction work will be accepted and approved.

6.1.2 SUBMITTAL REQUIREMENTS

Submittal requirements normally include the following:

6.1.2.1 PRELIMINARY PLAN REQUIREMENTS

The preliminary plan should be submitted with the initial request for an access driveway. The following information should be included on the plan:

- Scale of 1”=100’, or as normally required by the City;
- The name, address, and telephone number of the owner(s) and that of the applicant, where the applicant is an agent of the owner (e.g. contractor, tenant, consultant);
- The name of the property or development
- Location of the property in relation to municipal boundaries and all roads within one and one-half miles of the property – a location map with an approximate scale should indicate the location of the property with respect to the area;
- A description of the current and proposed land uses and all accesses within 300 feet of the property – at a minimum, proposed developments that have been approved, but not yet constructed, should be indicated;
- The identification of any legal rights-of-way or easements affecting the property as it relates to the roadway and proposed right-of-way acquisitions and alternate access, if appropriate (i.e. an access easement across neighboring property to a secondary road);
- The existing and proposed dimensions of the highway including through- and turn-lanes, shoulders, curbs, medians, etc.;
- The number, location, and dimensions of the proposed accesses (driveways and new public intersections);

- All site characteristics, such as existing structures, utilities, natural drainage, floodplains, and wetlands within 300 feet of the roadway

The City may waive any of the foregoing required information for a minor access, or a temporary access, if it is determined that any of the information mentioned above is not needed to secure an access permit.

6.1.2.2 ENGINEERING PLANS, SPECIFICATIONS, AND ESTIMATES OF COST

Engineering Plans, specifications, and estimates of total construction costs may be required by the City.

6.1.2.3 SPECIAL SURVEYS

Soil Surveys may be required for high-volume, major access driveways and when any driveway construction requires widening of the roadway pavement by more than 6 feet. Such surveys shall be completed before the completion of the final engineering plans and specifications to determine the existence of unsatisfactory subgrade materials or the need for remedial underground drainage. The results of the soil survey shall be submitted along with the engineering plans and specifications for review by the City. Surveys may be required to conduct soils analysis and to identify hazardous materials or sites (e.g. converted gas station sites or older industrial areas)

6.1.2.4 DRAINAGE STUDY

The City may request that a drainage study be prepared for the proposed development.

6.1.2.5 TRAFFIC IMPACT STUDY

The City may request that a traffic impact study (TIS) should be prepared for proposed developments consistent with its policies. A detailed description of the methodology and necessary data is presented in Section 6.3.

6.1.3 VARIANCES

Where the City finds that extraordinary hardships or practical difficulties may result from strict compliance with approved requirements, the City may approve variations to the requirements, provided that at least minimum safety standards are met, so that the public interest is served. The City may require that a traffic impact study (TIS) or other information or studies be submitted when reviewing a request for variation. Variances may be necessary for exceptions to turning restrictions or spacing standards where it can be demonstrated that no other reasonable options are available.

Economic development factors may be considered for development projects that will bring new job opportunities to the area. However, safety standards should not be compromised for economic reasons. In some cases, the City may elect to fund some or part of the costs for mitigating traffic impacts.

A petition for any variation should be submitted in writing to the City by the developer. The developer must prove that the variation will not be contrary to the public interest and that unavoidable practical difficulty or unnecessary hardship will result if not granted. The developer shall establish and substantiate that the variation conforms to the City's requirements and standards.

Care must be taken in issuing variances. No variation should be granted unless it is found that the following relevant requirements and conditions are satisfied. The City may grant variations whenever it is determined that all of the following have been met:

- The granting of the variation should be in harmony with the general purpose and intent of the regulations and shall not result in undue delay or congestion detrimental to the safety of the motoring public using the roadway.
- There must be proof of unique or existing special circumstances or conditions where strict application of the provisions would deprive the developer of reasonable access. Circumstances that would allow reasonable access by a road or street other than a primary roadway, circumstances where indirect or restricted access can be obtained, or circumstances where engineering or construction solutions can be applied to mitigate the condition shall not be considered unique or special.
- There must be proof of the need for the access and a clear documentation of the practical difficultly or unnecessary hardship. It is not sufficient to show that greater profit or economic gain would result if the variation were granted. Furthermore, the hardship or difficulty cannot be self-created or self-imposed; nor can it be established on this basis by the owner who purchases with or without knowledge of the applicable provisions. The difficulty or hardship must result from strict application of the provision, and it must be suffered directly and solely by the owner or developer of the property in question.

Upon receipt of relevant information, facts, and necessary data, the City should review the information and render a decision in writing to the developer. Materials documenting the variance should be maintained in the City's permit files. Failure to document decisions could open the City to potential charges of irregular conduct, with little evidence available for defense.

6.1.4 EXPIRATION OF PERMIT

Each access permit granted should have a time limit, before which construction must begin. If construction does not begin during the time allotted, the permit expires, and the permit must be applied for again. Having a time limit attached to a permit gives the City flexibility in the case of changing conditions, such as new adjacent development or a change in functional classification or the roadway, etc. A typical time limit is one year, although a longer period could be granted for large, regional developments.

6.2 COMMUNITY PLANS, ZONING, AND SUBDIVISION REGULATIONS

The City of Emmett should review community plans, zoning, and subdivision regulations and make changes where required, so that all plans and regulations are compatible with the standards found in the Access Management Guidelines.

6.3 TRAFFIC IMPACT STUDIES

A Traffic Impact Study (TIS) is a specialized study of the impacts that a certain type and size of development will have on the surrounding transportation system. A TIS is essential for many access management decisions, such as spacing of driveways, traffic control devices, and traffic safety issues. It is specifically concerned with the generation, distribution, and assignment of traffic to and from new development. The purpose of this section is to establish uniform guidelines for when a TIS is required and how the study is to be conducted.

6.3.1 WHEN REQUIRED

The City will determine when a complete TIS is required. The TIS should be required when if any of the following situations are proposed:

1. All new developments, or changes to existing developments, that are expected to generate more than 100 new peak-hour vehicle trips (total in and out vehicular movements)
2. Development that generates less than 100 new peak hour trips should require a TIS under unique circumstances such as: high crash locations, currently congested areas, or areas of critical local concern
3. All applications for rezoning
4. All applications for annexation
5. Any change in the land use or density that will change the site traffic generation by more than 15 percent, where at least 100 new peak-hour trips are involved
6. Any change in the land use that will cause the directional distribution of site traffic to change by more than 20 percent
7. When the original TIS is more than 2 years old, access decisions are still outstanding, and changes in development have occurred in the site environs
8. When development agreements are necessary to determine "fair share" contributions to major roadway improvements

6.3.2 STUDY CATEGORY AND HORIZON YEARS

The specific analysis requirements, and level of detail, are determined by the following requirements. The study category is based on the net new number of peak hour trips generated by the development. The City will confirm the study category and horizon years after the initial work activity (see Section 6.3.3).

- **Category I TIS –** Developments that generate fewer than 500 peak hour trips. The study horizon shall be limited to the opening year of the development. The minimum study area shall include site access drives and adjacent signalized intersections and/or major unsignalized street intersections
- **Category II TIS –** Developments that generate from 500 up to 1,000 peak hour trips. The study horizon shall include both the opening year of the development and five years after opening. The minimum study area shall include the site access drives and all signalized intersections and/or major unsignalized street intersections within one-half mile of the development.
- **Category III TIS –** Developments that generate 1,000 or more peak hour trips. The study horizon shall include the opening year of the development, five years after opening, and ten years after opening. The minimum study area shall include the site access drives and all signalized intersections and/or major unsignalized street intersections within one mile of the development.

6.3.3 INITIAL WORK ACTIVITY

A developer, or their agent, shall first estimate the number of vehicular trips to be generated by the proposed development to determine whether a TIS may be required and the applicable category. The City must give concurrence on the number of trips to be generated by the proposed development. The developer may, if desired, request that the City assist in estimating the number of trips for determining whether a TIS is required for the proposed development.

Next, the City shall make a ruling whether a TIS is required and what the study category shall be. As previously outlined, the City may make an independent finding that a TIS is required.

If a TIS is required, the developer shall have prepared for submittal to the City for review and approval, a technical memorandum with the following information:

- Site plan, land uses, and proposed access locations
- Table outlining calculations for net new trips generated by the site
- Proposed study horizon years
- Proposed peak hour periods to study
- Proposed trip distribution for site traffic
- Potential study intersections, including major off-site intersections impacted by 30 or more net new trips during the PM Peak Hour

The study area should include at a minimum, the site access points and nearest most likely utilized arterial or collector intersection. Additional intersections may be included at the discretion of the City. The limits of the study area should be based on the size and extent of the proposed development, and an understanding of existing and future land use, as well as traffic conditions in and around the site. The City, after possible consultation with other affected jurisdictions, will make the final determination of the study area limits.

After approval of the TIS scope by the City, the actual TIS work activities may begin.

6.3.4 QUALIFICATIONS FOR PREPARING TRAFFIC IMPACT STUDY DOCUMENTS

In accordance with State law, the TIS shall be conducted and prepared under the direction of a Professional Engineer (Civil) licensed to practice in the State of Idaho. The subject engineer must have special training and experience in traffic engineering. Professional Traffic Operations Engineer (PTOE) certification is preferred.

6.3.5 ANALYSIS AND APPROACH METHODS

The traffic study approach and methods shall be guided by the following criteria.

6.3.5.1 STUDY AREA

The study area will be determined based on the initial work activity (see Section 6.3.3). The extent of the study area may be either enlarged or decreased, depending on special conditions as determined by the City.

6.3.5.2 ANALYSIS TIME PERIODS

The study horizon years shall be determined by project type and size, in accordance with the criteria previously outlined (see Section 6.3.2).

Both the morning and afternoon weekday peak hours shall be analyzed, unless the proposed project is expected to generate no trips, or a very low number of trips, during either the morning or evening peak periods. If this is the case, the requirement to analyze one or both of these periods may be waived by the City.

Where the peak traffic hour in the study area occurs during a different time period than the normal morning or afternoon peak travel periods (for example mid-day), or occurs on a weekend, or if the proposed project has unusual peaking characteristics, these additional peak hours shall also be analyzed.

6.3.5.3 SEASONAL ADJUSTMENTS

When directed by the City, the traffic volumes for the analysis hours shall be adjusted for the peak season, in cases where seasonal traffic data is available.

6.3.5.4 DATA COLLECTION REQUIREMENTS

All data should be collected in accordance with the latest edition of the ITE *Manual of Traffic Engineering Studies*, or as directed by the City. The following is the minimum data necessary for developing the TIS:

- **Turning movement counts.** Manual turning movement counts should be obtained for all existing cross-street intersections to be analyzed during the morning and afternoon peak periods. Turning movement counts may be required during other periods as directed by the City. Available turning movement counts may be extrapolated a maximum of two years with the concurrence of the City.
- **Daily traffic volumes.** The current and projected daily traffic volumes should be presented in the report. If available, daily count data from the local agencies may be extrapolated a maximum of two years with the concurrence of the City. Where daily count data is not available, mechanical counts will be required at locations agreed upon by the City.
- **Crash Data.** Vehicle crash data shall be obtained for the most current three-year time period available.
- **Roadway and intersection geometrics.** Roadway geometric information should be obtained. This includes, but is not limited to, roadway width, number of lanes, turning lanes, vertical grade, location of nearby driveways, and lane configuration at intersections.
- **Traffic control devices.** The location and type of traffic controls shall be identified.

6.3.5.5 TRIP GENERATION

The latest edition of ITE's *Trip Generation Handbook* shall be used for selecting trip generation rates. Other rates may be used with the approval of the City in cases where *Trip Generation Handbook* does not include trip rates for a specific land use category, or includes only limited data, or where local trip rates have been shown to differ from the ITE rates.

Site traffic should be generated for daily, AM, and PM peak hour periods. Adjustments made for "pass-by" and "internal capture" traffic volumes should follow the methodology outlined in the latest edition of ITE's *Trip Generation Handbook*. A proposed "pass-by" traffic volume discount should be compared to the volume of adjacent street traffic for reasonableness.

A trip generation table shall be prepared showing proposed land use, trip rates, and vehicle trips for daily and peak hour periods and appropriate traffic volume adjustments, if applicable.

6.3.5.6 TRIP DISTRIBUTION AND ASSIGNMENT

Projected trips shall be distributed and added to the projected non-site traffic on the roadways and intersections under study. The specific assumptions and data sources used in deriving trip distribution and assignment shall be documented in the report.

Future traffic volumes shall be estimated using information from available transportation models, or applying an annual growth rate to the base-line traffic volumes. The future traffic volumes shall be representative of the horizon year for project development. If the annual growth rate method is used, the City must give prior approval to the percentage used.

In addition, any nearby proposed "on-line" development projects shall be taken into consideration when forecasting future traffic volumes. The increase in traffic from proposed "on-line" projects shall be compared to the increase in traffic by applying an annual growth rate.

If modeling information is unavailable, the greatest increase from either the "on-line" developments, the application of an annual growth rate, or a combination of an annual growth rate and "on-line" developments, shall be used to forecast the future traffic volumes.

The site-generated traffic shall be assigned to the street network in the study area based on the approved trip distribution percentages. The site traffic shall be combined with the forecasted traffic volumes to show the total traffic conditions estimated at development completion. A "figure" will be required showing daily and peak period turning movement volumes for each traffic study intersection. In addition, a "figure" shall be prepared showing the base-line volumes with site-generated traffic added to the street network. This "figure" will represent site-specific traffic impacts to existing conditions.

6.3.5.7 CAPACITY ANALYSIS

Level of service (LOS) shall be computed for signalized and unsignalized intersections in accordance with the latest edition of the Highway Capacity Manual. The intersection LOS shall be calculated for each of the following conditions (if applicable):

- Existing peak hour traffic volumes ("figure" required)
- Existing peak hour traffic volumes including site-generated traffic ("figure" required)
- Future traffic volumes not including site traffic ("figure" required)
- Future traffic volumes including site traffic ("figure" required)
- LOS results for each traffic volumes scenario ("table" required)

The LOS table shall include LOS results for AM and PM peak periods if applicable. The table shall show LOS conditions with corresponding vehicle delays for signalized intersections, and LOS conditions for the critical movements at unsignalized intersections. For signalized intersections, the LOS conditions and average vehicle delay shall be provided for each approach and the intersection as a whole.

Unless otherwise directed by the City, the capacity analysis for signalized intersections shall be conducted using the Highway Capacity Manual Operational Analysis Method for each study horizon year. It shall include existing phasing, timing, splits, and cycle lengths as observed and measured during the peak hour traffic periods.

For unsignalized intersections, the Highway Capacity Manual methodology shall be used.

For roundabout intersections, SIDRA or RODEL software analysis is preferred. Other analysis methodologies require approval by the City.

If the new development is scheduled to be completed in phases, the TIS will, if directed by the City, include an LOS analysis for each separate development phase in addition to the TIS for each horizon year. The incremental increases in site traffic from each phase shall be included in the LOS analysis for each preceding year of development completion. A "figure" will be required for each horizon year of phased development.

6.3.5.8 TRAFFIC SIGNAL NEEDS

A traffic signal needs study shall be conducted for all new proposed signals for the base year. If the warrants are not met for the base year, they should be evaluated for each year in the study horizon.

Traffic signal studies shall be conducted by a method pre-approved by the City.

6.3.5.9 CRASH ANALYSIS

An analysis of three-year crash data shall be conducted to determine if the level of safety will deteriorate due to the addition of site traffic.

6.3.5.10 SPEED CONSIDERATIONS

Vehicle speed is used to estimate safe stopping distances and cross corner sight distances. In general, the posted speed limit is representative of the 85th percentile speed and may be used to calculate safe stopping and cross corner sight distances.

6.3.5.11 IMPROVEMENT ANALYSIS

The roadways and intersections within the study area shall be analyzed, with and without the proposed development to identify any projected impacts concerning level of service and safety.

Where the highway will operate at LOS C or better without the development, the traffic impact of the development on the roadways and intersections within the study area shall be mitigated to LOS C. Mitigation to LOS D may be acceptable with the concurrence of the City.

6.3.5.12 CERTIFICATION

The TIS shall be prepared under the supervision of a Professional Engineer (Civil) registered in the State of Idaho. The report shall be sealed and signed.

6.3.5.13 REPORT FORMAT

The format requirements for the general text arrangements of a traffic impact study are included in Appendix B. Deviations from this format must receive prior approval from the City.

6.4 EXISTING PROBLEM AREAS

Introduction of a "retrofit" program of access control to an existing roadway is often difficult. Land for needed improvements is often unavailable, making certain access management techniques impossible to implement and requiring the use of minimum rather than desirable standards. Rights of property access must be respected. Social and political pressures will emerge from abutting property owners who perceive that their access will be unduly restricted and their business hurt. The needed cooperation of proximate, sometimes competitive, developments in rationalizing on-site access and driveway locations may be difficult to achieve. And it may be difficult to compare the cost of economic hardship to an individual to the benefits accruing to the general public. Accordingly, the legal, social, and political aspects of access management are particularly relevant in retrofit situations and should be thoroughly understood by public agencies and private groups responsible for implementing access control programs for retrofit projects.

The general reasons underlying retrofit actions include the following:

- Increased congestion and crashes along a given section of road that are attributed to random or inadequate access;
- Major construction or design plans for a road that make access management and control essential;
- Street expansions or improvements that make it practical to reorient access to a cross street and remove (or reduce) arterial access; and
- Coordinating driveways, on one side of a street, with those planned by a development on the other side

6.4.1 TYPES OF ACTION

Most retrofit actions involve the application of accepted traffic engineering techniques that accomplish the following:

A. Limit the number of conflict points
B. Separate basic conflict areas
C. Limit speed adjustment problems
D. Remove turning vehicles from through-travel lanes

Table 9 through Table 12 presents the various access management techniques that achieve each of these objectives and mainly apply to retrofit situations.

Table 9 - Retrofit Techniques - Category A

Category A - Limit Number of Conflict Points	
No.	**Description**
A-1	Install median barrier with no direct left-turn access
A-2	Install raised median divider with left-turn deceleration lanes
A-3	Install one-way operations on the highway
A-4	Install traffic signal at high-volume driveways
A-5	Channelize median openings to prevent left-turn ingress and/or egress maneuvers
A-6	Widen right through lane to limit right-turn encroachment onto the adjacent lane to the left
A-7	Install channelizing islands to prevent left-turn deceleration lane vehicles from returning to the through lanes
A-8	Install physical barrier to prevent uncontrolled access along property frontages
A-9	Install median channelization to control the merge of left-turn egress vehicles
A-10	Offset opposing driveways
A-11	Locate driveway opposite a three-leg intersection or driveway and install traffic signals where warranted
A-12	Install two one-way driveways in lieu of one two-way driveway
A-13	Install two two-way driveways with limited turns in lieu of one standard two-way driveways
A-14	Install two one-way driveways in lieu of two two-way driveways
A-15	Install two two-way driveways with limited turns in lieu of two standard two-way driveways
A-16	Install driveway channelizing island to prevent left-turn maneuvers
A-17	Install driveway channelizing island to prevent driveway encroachment conflicts
A-18	Install channelizing island to prevent right-turn deceleration lane vehicles from returning to the through lanes
A-19	Install channelizing island to control the merge area of right-turn egress vehicles
A-20	Regulate the maximum width of driveways

Table 10 - Retrofit Techniques - Category B

Category B - Separate Basic Conflict Areas	
No.	**Description**
B-1*	Regulate minimum spacing of driveways
B-2	Regulate minimum corner clearance
B-3	Regulate minimum property clearance
B-4*	Optimize driveway spacing in the permit authorization stage
B-5*	Regulate maximum number of driveways per property frontage
B-6	Consolidate access for adjacent properties
B-7	Require highway damages for extra driveways
B-8	Purchase abutting properties
B-9	Deny access to small frontage
B-10	Consolidate existing access whenever separate parcels are assembled under one purpose, plan, entity, or usage
B-11*	Designate the number of driveways regardless of future subdivision of that property
B-12	Require access on collector street (when available) in lieu of additional driveway on arterial

* = not directly applicable for retrofit

Table 11 - Retrofit Techniques - Category C

Category C - Limit Speed-Adjustment Problems	
No.	**Description**
C-1	Install traffic signals to slow highway speeds and meter traffic for larger gaps
C-2	Restrict parking on the roadway next to driveways to increase driveway turning speeds
C-3	Install visual cues of the driveway
C-4	Improve driveway sight distance
C-5	Regulate minimum sight distance
C-6*	Optimize sight distance in the permit authorization stage
C-7	Increase the effective approach width (horizontal geometrics)
C-8	Improve the driveway profile (vertical geometrics)
C-9	Require driveway paving
C-10	Regulate driveway construction (performance bond) and maintenance
C-11	Install right-turn acceleration lane
C-12	Install channelizing islands to prevent driveway vehicles from backing onto the arterial
C-13	Install channelizing islands to move ingress merge point laterally away from the arterial
C-14	Move sidewalk-driveway crossing laterally away from the arterial

* = not directly applicable for retrofit

Table 12 - Retrofit Techniques - Category D

Category D - Remove Turning Vehicles from the Through Lanes	
No.	**Description**
D-1	Install two-way left-turn lane
D-2	Install continuous left-turn lane
D-3	Install alternating left-turn lane
D-4	Install isolated median and deceleration lane to shadow and store left-turning vehicles
D-5	Install left-turn deceleration lane in lieu of right-angle crossover
D-6	Install median storage for left-turn deceleration lane
D-7	Increase storage capacity of existing left-turn deceleration lane
D-8	Increase the turning speed of right-angle median crossovers by increasing the effective approach width
D-9	Install continuous right-turn lane
D-10	Construct a local service road
D-11*	Construct a bypass road
D-12*	Reroute through-traffic
D-13	Install supplementary one-way right-turn driveways to divided highway (non-capacity warrant)
D-14	Install supplementary access on collector street when available (non-capacity warrant)
D-15	Install additional driveway when total driveway demand exceeds capacity
D-16	Install right-turn deceleration lane
D-17	Install additional exit lane on driveway
D-18	Encourage connections between adjacent properties (even when each has arterial access)
D-19	Require two-way driveway operation where internal circulation is not available
D-20	Require adequate internal design and circulation plan

* = not directly applicable for retrofit

APPENDIX A TURN LANE WARRANTS

All turn lane warrants are from ACHD *General Requirements and Procedures for Development* and originally based on NCHRP Reports 279 and 457.

LEFT-TURN LANES

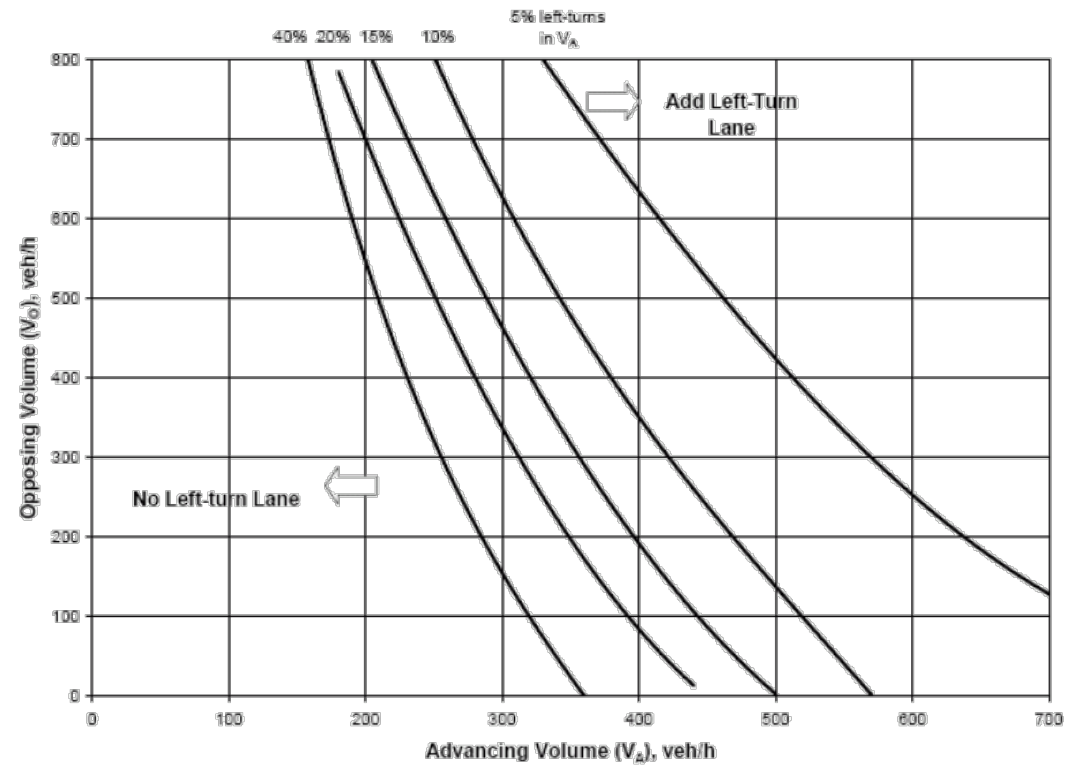

Figure 6 - Left-Turn Lane Guidelines for 2-Lane Roads: ≤ 40 mph

The following data are required to perform this turn-lane warrant:

1. Opposing Volume (vehicles/hour), V_O: the opposing volume shall include only the right-turn and through movements in the opposite direction of the left-turning vehicle.
2. Advancing Volume (vehicles/hour), V_A: the advancing volume should include the right-turn, left-turn, and through movements in the same direction as the left turning vehicle.
3. Operation Speed (mph): the greatest anticipated operating speed measured as the 85th percentile speed or posted speed.
4. Percentage of left turns in V_A

A left-turn lane is not needed for left turn volumes less than 10 vehicles/hour. However, criteria other than volume, such as crash experience, may be used to justify a left-turn lane.

The appropriate trend line is identified based on the percentage of left-turns in the advancing volume, rounded up to the nearest percentage trend line. If the advancing and opposing volume combination intersects above or to the right of this trend line, a left-turn lane is appropriate.

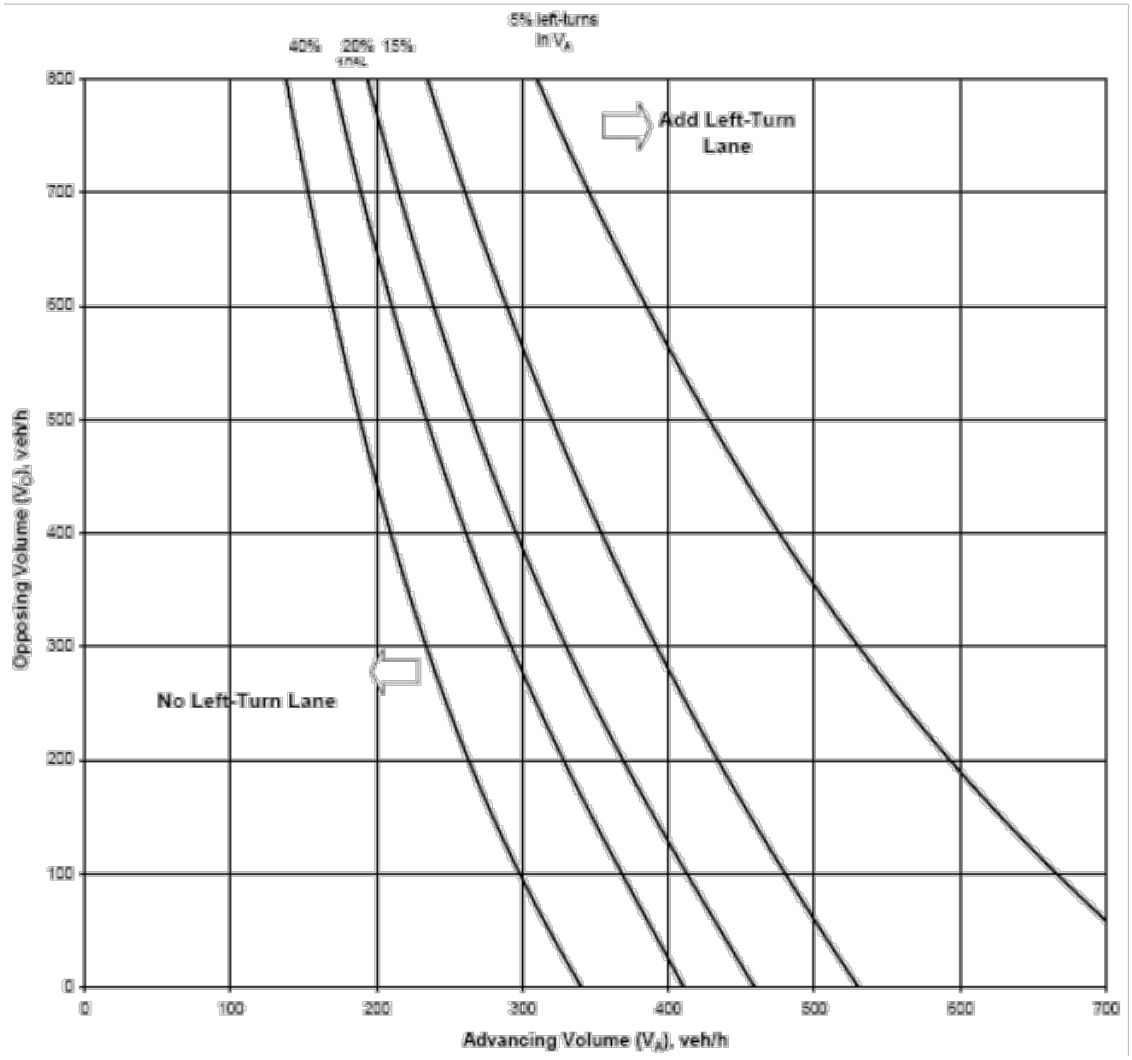

Figure 7 - Left-Turn Lane Guidelines for 2-Lane Roads: 45 mph

The following data are required to perform this turn-lane warrant:

1. Opposing Volume (vehicles/hour), V_O: the opposing volume shall include only the right-turn and through movements in the opposite direction of the left-turning vehicle.
2. Advancing Volume (vehicles/hour), V_A: the advancing volume should include the right-turn, left-turn, and through movements in the same direction as the left turning vehicle.
3. Operation Speed (mph): the greatest anticipated operating speed measured as the 85th percentile speed or posted speed.
4. Percentage of left turns in V_A

A left-turn lane is not needed for left turn volumes less than 10 vehicles/hour. However, criteria other than volume, such as crash experience, may be used to justify a left-turn lane.

The appropriate trend line is identified based on the percentage of left-turns in the advancing volume, rounded up to the nearest percentage trend line. If the advancing and opposing volume combination intersects above or to the right of this trend line, a left-turn lane is appropriate.

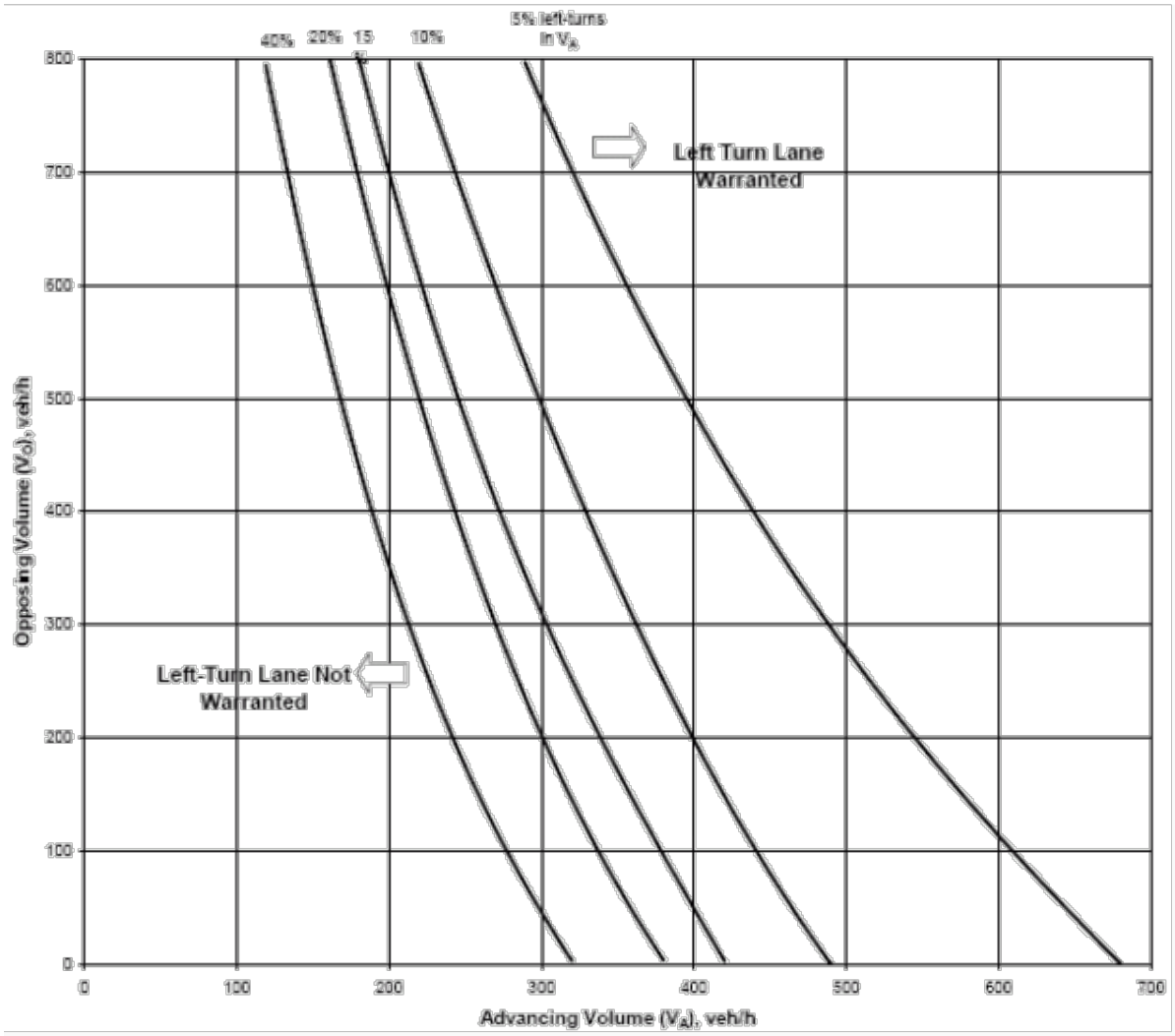

Figure 8 - Left-Turn Lane Guidelines for 2-Lane Roads: 50 mph

The following data are required to perform this turn-lane warrant:

1. Opposing Volume (vehicles/hour), V_O: the opposing volume shall include only the right-turn and through movements in the opposite direction of the left-turning vehicle.
2. Advancing Volume (vehicles/hour), V_A: the advancing volume should include the right-turn, left-turn, and through movements in the same direction as the left turning vehicle.
3. Operation Speed (mph): the greatest anticipated operating speed measured as the 85th percentile speed or posted speed.
4. Percentage of left turns in V_A

A left-turn lane is not needed for left turn volumes less than 10 vehicles/hour. However, criteria other than volume, such as crash experience, may be used to justify a left-turn lane.

The appropriate trend line is identified based on the percentage of left-turns in the advancing volume, rounded up to the nearest percentage trend line. If the advancing and opposing volume combination intersects above or to the right of this trend line, a left-turn lane is appropriate.

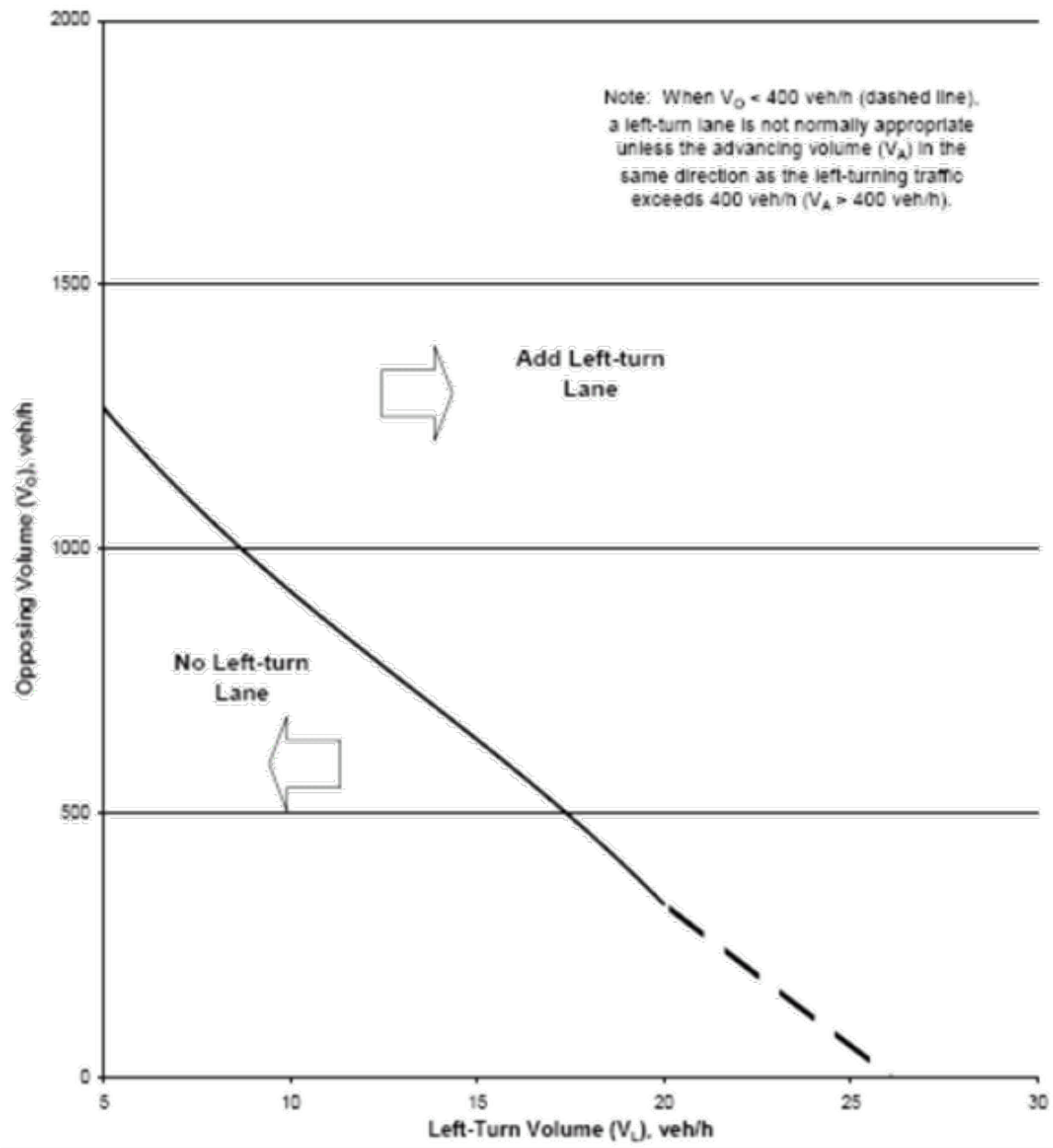

Figure 9 - Left-Turn Lane Guidelines for 4-Lane Undivided Roads

The following data are required to perform this turn-lane warrant:

1. Opposing Volume (vehicles/hour) – V_O – The opposing volume is to include only the right-turn and through movements in the opposite direction of the left-turning vehicle.
2. Left-Turn Volume – V_L

If the opposing and left-turn volume combination intersects above or to the right of the trend line, a left-turn lane is appropriate.

RIGHT-TURN LANES

Dedicated right-turn lanes should be strongly considered in situations where:

- Poor internal site design and circulation leads to backups on the mainline.
    - Auto-oriented businesses with short drive-through lanes or poorly designed parking lots are examples of this situation
- Peak hour turning traffic is usually high (greater than 10% of the daily total)
- Operating speeds on the mainline route are very high (greater than 50 mph) and drivers would generally not expect right turns
- Driveway or minor public road intersection is difficult for drivers to see
- Driveway entrance is gated or otherwise must be entered very slowly
- Right-turning traffic consists of an unusually high number of trailers or other large vehicles
- Intersection or driveway angle is highly skewed
- Rear-end collision experience is unusually high at a location

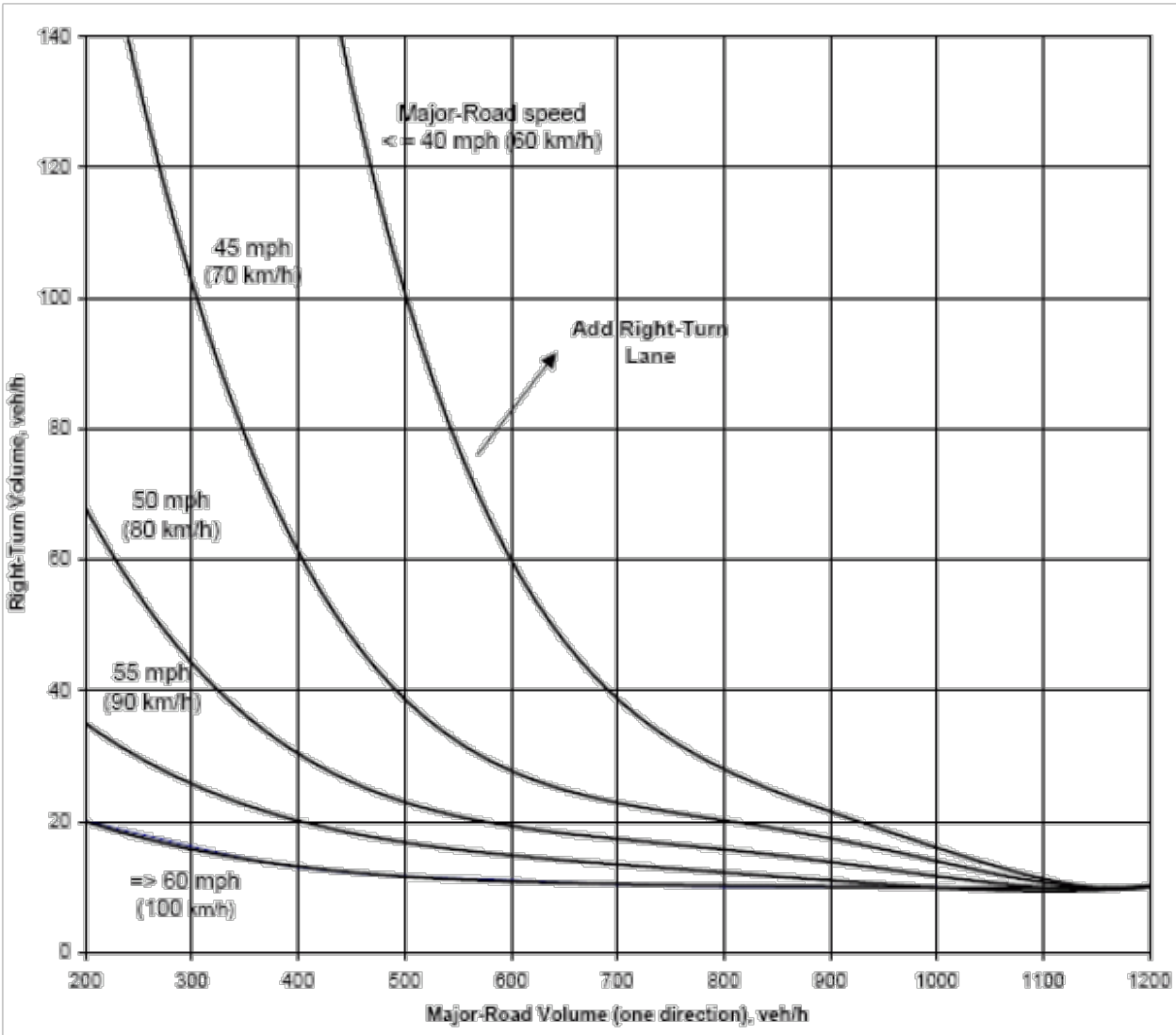

Figure 10 - Right-Turn Guidelines for 2-Lane Roads

The following data are required:

- Advancing Volume (vehicles/hour): the advancing volume is to include the right-turn, left-turn, and through movements in the same direction as the right-turning vehicle.
- Right-Turning Volume (vehicles/hour): the right-turning volume is the number of advancing vehicles turning right.
- Operating Speed (mph): greatest of anticipated operating speed measured as the 85th percentile speed or posted speed.

Note: Right-turn lane is not needed for right-turn volumes less than 10 vehicles/hour. However, criteria other than volume, e.g. crash experience, may be used to justify a right-turn lane.

If the combination of major road approach volume and right-turn volume intersects above or to the right of the speed trend line corresponding to the major road operating speed, then a right-turn lane is appropriate.

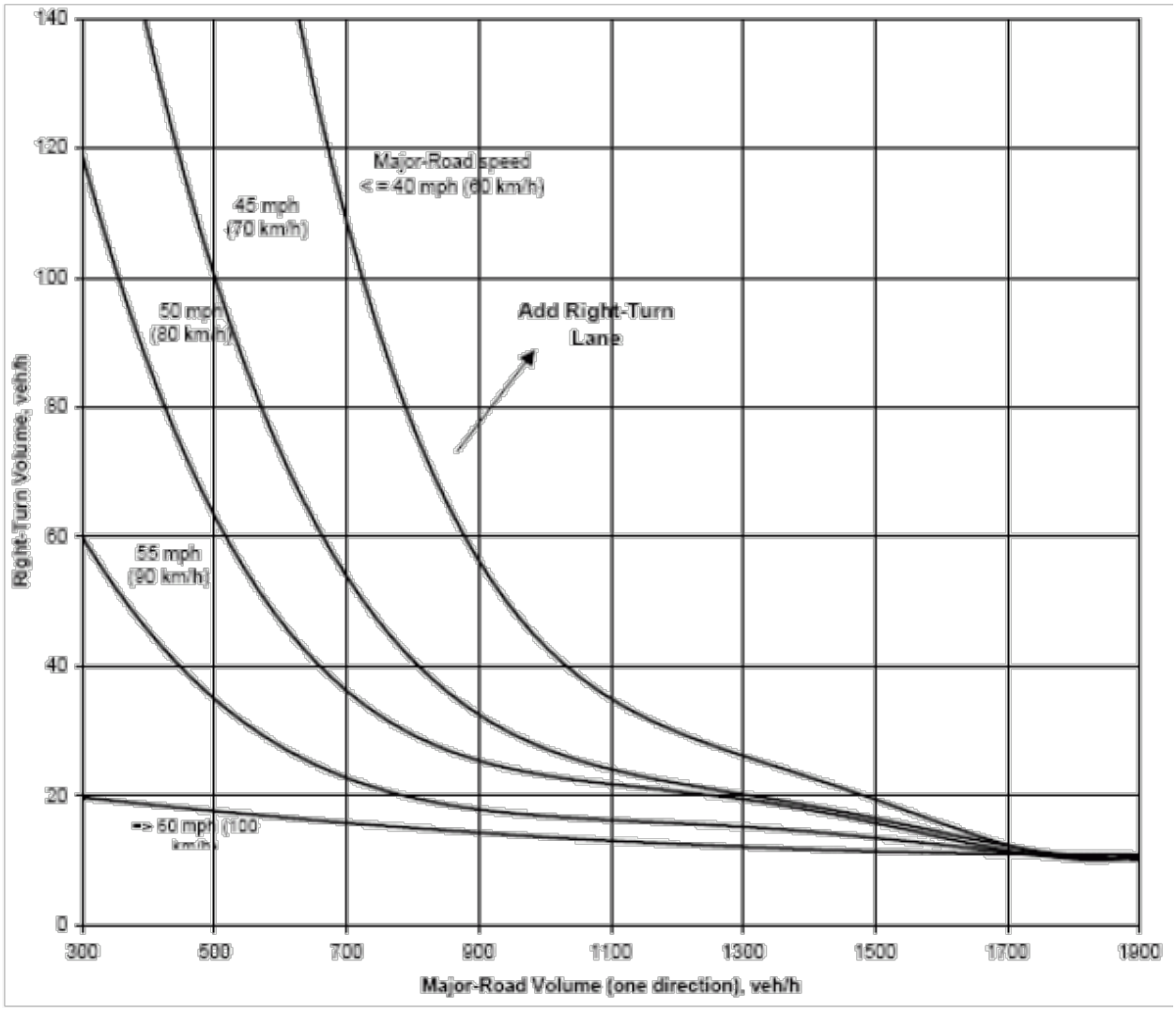

Figure 11 - Right-Turn Lane Guidelines for 4-Lane Roads

The following data are required:

1. Advancing Volume (vehicles/hour) – The advancing volume is to include the right-turn, left-turn, and through movements in the same direction as the right-turning vehicle.
2. Right-Turning Volume (vehicles/hour) – the right-turning volume is the number of advancing vehicles turning right.
3. Operating Speed (mph) – The greatest of anticipated operating speed, measured 85th percentile speed, or posted speed.

Note: Right-turn lane not warranted for right-turn volume less than 10 vehicles/hour. However, criteria other than volume (e.g. crash experience) may be used to justify a right-turn lane.

If the combination of major road approach volume and right-turn volume intersects above or to the right of the speed trend line corresponding to the major road operating speed, then a right-turn lane is appropriate.

APPENDIX B TRAFFIC IMPACT STUDY REPORT FORMAT REQUIREMENTS

The following provides the format requirements for the general text arrangement of a TIS. Deviations from this format must receive prior approval of the City.

I. Introduction and Summary

- Purpose of Report and Study Objectives
- Executive Summary
    - Site Location and Study area
    - Development Description
    - Principal Findings
    - Conclusions
    - Recommendations

II. Proposed Development

- Site Location (vicinity map)
- Land Use and Intensity
- Proposed Development Details
- Site Plan (readable version must be provided)
- Access Geometrics
- Development Phasing and Timing

III. Study Area Conditions

- Study Area
    - Area of Significant Traffic Impact
    - Influence Area
- Lane Use
    - Existing Lane Use
    - Anticipated Future Development
- Site Accessibility
    - Existing and Future Area Roadway System

IV. Analysis of Existing Conditions

- Physical Characteristics
    - Roadway Characteristics
    - Traffic Control Devices
    - Pedestrian/Bicycle Facilities
- Traffic Volumes
    - Daily, Morning, and Afternoon Peak Periods (two hours minimum, and others as required)
- Level of Service
    - Morning Peak Hour, Afternoon Peak Hour (and others as required)
- Safety
- Data Sources

V. Projected Traffic

- Site Traffic Forecasts (each horizon year)
  - Trip Generation
  - Mode Split
  - Pass-by Traffic (if applicable)
  - Trip Distribution
  - Trip Assignment
- Non-Site Traffic Forecasting (each horizon year)
  - Projections of non-site traffic (methodology for the projections shall receive prior approval by the City)
- Total Traffic (each horizon year)

VI. Traffic and Improvement Analysis

- Site Access
- Level of Service Analysis
  - Without Project (for each horizon year including any programmed improvements)
  - With Project (for each horizon year including any programmed improvements)
- Roadway Improvements
  - Improvements Programmed to Accommodate Non-Site Traffic
  - Additional Alternative Improvements to Accommodate Site Traffic
- Traffic Safety
  - Sight Distance
  - Acceleration/Deceleration Lanes, Left-Turn Lanes
  - Adequacy of Location and Design of Driveway Access
- Pedestrian Considerations
- Speed Considerations
- Traffic Control Needs
- Traffic Signal Needs (base plus each year in five-year horizon)

VII. Conclusions

VIII. Recommendations

- Site Access
- Roadway Improvements
- Phasing
- Other

Appendices

- Traffic Volume Counts
- Capacity Analyses Worksheets
- Traffic Signal Needs Studies
- Accident Data and Summaries

Figures and Tables (the following items shall be documented in the text or appendices)

- Site Location
- Site Plan
- Existing Transportation System
- Existing Peak Hour Turning Volumes
- Collision Diagram(s)
- Estimated Site Traffic Generation
- Directional Distribution of Site Traffic
- Site Traffic
- Non-Site Traffic
- Total Future Traffic
- Projected Levels of Service
- Recommended Improvements
    - For Category I, many of the items may be documented within the text. For other categories, the items shall be included in figures and/or tables which are legible.

Design Standard Reference

- Design in accordance with the City's current Design and Construction Standards
- Conduct capacity analysis in accordance with the latest edition of the Highway Capacity Manual, or as otherwise approved.

THIS PAGE INTENTIONALLY LEFT BLANK

Appendix B

Culvert Inventory

THIS PAGE INTENTIONALLY LEFT BLANK

APPENDIX B
CULVERT INVENTORY

LOC_ID	LOC_DESC	PHOTO_1	PHOTO_2	MATERIAL	SIZE (IN)	CONDITION	COMMENT
1	MAPLE AND LOCUST	22	23	STEEL	UNK	GOOD	
2		23		PVC	UNK	FAIR	
3	MCKINLEY AND 2ND ST	24	25	PVC	UNK	FAIR	
4		25		PVC	UNK	FAIR	
5	MCKINLEY AND 3RD ST	26		PVC	10	FAIR	
6	MCKINLEY AND 3RD ST	27		STEEL	10	POOR	
7	MURRAY AND 4TH	28		CPVC	22	FAIR	
8		29		PVC	15	GOOD	
9	4TH AND WILSON	30		STEEL	22+	GOOD	
10	4TH AND WILLIAMS	31		STEEL	24	GOOD	
11	4th AND WILSON	32		STEEL	20	GOOD	
12	499 W 4TH ST	33		STEEL	20	GOOD	
13	499 W 4TH ST	34		CONC	BOX	GOOD	
14	499 W 4TH ST	35		CPVC	18	GOOD	
15	WILLIAMS RD	36		CONC	UNK	FAIR	
16	WILLIAMS RD	37		CONC	BOX	FAIR	
17	WILLIAMS RD	38		CONC	BOX	FAIR	
18	WILLIAMS RD	39		STEEL	18	GOOD	
19	WILLIAMS RD	40		STEEL	18	GOOD	
20	WILLIAMS RD	41		STEEL	18	GOOD	
21	WILLIAMS RD	42		STEEL	12	GOOD	
22	WILLIAMS RD	43		STEEL	12	FAIR	
23	WILLIAMS RD	44		STEEL	12	GOOD	
24	WILLIAMS RD	45		CONC	10	GOOD	
25	WILLIAMS RD	46		STEEL	10	GOOD	
26	WILLIAMS RD	47		CONC	10	FAIR	
27	BOISE N OF HWY	48		CONC	12	GOOD	
28	12TH ST AND HAYES	49		CSTEEL	72	GOOD	
29	12TH ST AND HAYES	50		CSTEEL	72	FAIR	
30	12TH ST AND HAYES	51		CSTEEL	72	GOOD	
31	12TH ST AND HAYES	52		CSTEEL	72	FAIR	
32	1110 HAYES ST	53		CONC	12	FAIR	CRAX ON HEADWALL
33	12TH ST HOPPEL FIELD	54		CPVC	72	GOOD	
34	12TH ST HOPPEL FIELD	55		CPVC	72	GOOD	
35	JUDD LN	56		CONC	15	GOOD	
36	JUDD LN	57		CONC	14	FAIR	
37	JUDD LN	58		STEEL	11	FAIR	
38	JUDD LN	59		STEEL	11	FAIR	
39	1414 JUDD LN	60		CONC	12	FAIR	CRAX IN HEADWALL
40	1414 JUDD LN	61		CONC	12	GOOD	
41	JOHNS AND 12TH ST	62		PVC	12	FAIR	
42	12TH AND MOFFAT	63		PVC	8	GOOD	HOMEOWNER WANTS TO RUN IRRIGATION FROM BOX ACROSS THE STREET
43	12TH AND MOFFAT	64		CONC	BOX	GOOD	
44	12TH AND MOFFAT	65		CONC	BRIDGE	FAIR	
45	12TH AND SUBSTATION	66		CSTEEL	12	FAIR	
46	12TH AND SUBSTATION	67		CSTEEL	12	GOOD	
47	QUEEN ANNE DR	68		CONC	12	GOOD	
48	QUEEN ANNE DR	69		CONC	12	GOOD	
49	12TH ST	70		CSTEEL	72	GOOD	
50	12TH ST	71		CSTEEL	72	GOOD	
51	MOFFAT AVE	72		CONC	36	FAIR	
52	MOFFAT AVE	73		CONC	36	GOOD	
53	MOFFAT AVE	74		CSTEEL	12	FAIR	
54	MOFFAT AVE	75		CSTEEL	12	GOOD	
55	JOHNS AVE	76		CPVC	72	GOOD	

THIS PAGE INTENTIONALLY LEFT BLANK

Appendix C

ITD Bridge Inspection Reports

THIS PAGE INTENTIONALLY LEFT BLANK

Idaho Transportation Department
Pontis Field Inspection Report

Bridge Key:	19970	Structure Name:	93841A 2.45
(6)Features Intersected:	LAST CHANCE CANAL	(9)Location:	0.4 S. 1.4 E. EMMETT
Xref Structure Name:		Admin Jurisdiction:	4520 City of Emmett
		District:	03

Elm/Env	Element Description	Total Qty	Units	State 1	State 2	State 3	State 4
12/3	**Reinforced Concrete Deck**	829	sq.ft	445	384	0	0
	Reinforced concrete deck is in satisfactory condition. Edges pf deck covered with gravel.						
510/3	***Wearing Surfaces***	768	*sq.ft*	0	614	154	0
	Asphalt wearing surface is in fair condition with substantial rutting of wheel paths. Two inch deep rutting along west side. Raveling along the east edge.						
1120/3	***Efflorescence/Rust Staining***	384	*sq.ft*	0	384	0	0
	Moderate surface scaling up to 1/8 inch deep with light efflorescence on deck underside in locations, particularly the worst between 1st and 2nd beams, both sides.						
1130/3	***Cracking (RC and Other)***	290	*sq.ft*	290	0	0	0
	Minor hairline random cracking on deck underside.						
110/2	**Reinforced Concrete Open Girder/Beam**	210	ft	101	109	0	0
	Structure consists of seven cast-in-place concrete beams. Beams are in fair condition. High water line is 4 inches above the bottom of the beams.						
1080/2	***Delamination/Spall/Patched Area***	69	*ft*	0	69	0	0
	Minor spalls on both exterior beams, with exposed rebar. Exposed rebar has been painted.						
1120/2	***Efflorescence/Rust Staining***	28	*ft*	0	28	0	0
	Light efflorescence on beams.						
1130/2	***Cracking (RC and Other)***	113	*ft*	101	12	0	0
	Typical hairline flexure cracking. A few horizontal hairline cracks near beam bottoms. Some cracks have been caulked.						
215/2	**Reinforced Concrete Abutment**	138	ft	0	136	2	0
	Reinforced concrete abutments are in fair condition. Scaling up to 3/8 inch deep with moderate efflorescence in back wall between beams. Integral wingwalls are in fair condition.						
1080/2	***Delamination/Spall/Patched Area***	2	*ft*	0	0	2	0
	SE corner wingwall/abutment joint has a 12 inch long spall 11 inches deep into the base of the wingwall.						
1130/2	***Cracking (RC and Other)***	1	*ft*	0	1	0	0
	Full height vertical crack at center of south abutment.						

Idaho Transportation Department
Pontis Field Inspection Report

Bridge Key:	19970	Structure Name:	93841A 2.45
(6)Features Intersected:	LAST CHANCE CANAL	(9)Location:	0.4 S. 1.4 E. EMMETT
Xref Structure Name:		Admin Jurisdiction:	4520 City of Emmett
		District:	03

Elm/Env	Element Description	Total Qty	Units	State 1	State 2	State 3	State 4
1190/2	***Abrasion/Wear(PSC/RC)***	135	*ft*	0	135	0	0
	½ inch surface abrasion below water line.						
331/3	**Reinforced Concrete Bridge Railing**	59	ft	10	49	0	0
	Concrete bridge railing is in fair condition with general weathering.						
1080/3	***Delamination/Spall/Patched Area***	23	*ft*	0	23	0	0
	Delamination and spalling in locations along exterior surfaces exposing reinforcing steel. Exposed rebar has been coated with paint. New spalls and exposed rusting rebar have formed.						
1130/3	***Cracking (RC and Other)***	33	*ft*	10	23	0	0
	Vertical hairline cracking. Cracks have been caulked.						
7000/3	***Damage***	3	*ft*	0	3	0	0
	Collision damage to west end of south rail.						

Idaho Transportation Department
Pontis Field Inspection Report

Bridge Key:	19970	Structure Name:	93841A 2.45
(6)Features Intersected:	LAST CHANCE CANAL	(9)Location:	0.4 S. 1.4 E. EMMETT
Xref Structure Name:		Admin Jurisdiction:	4520 City of Emmett
		District:	03

Additional Condition Information

ROADWAY APPROACHES: Asphalt approaches are in satisfactory condition. Rutting and patched potholes.

CURBS: None

EMBANKMENT: Embankments are well vegetated and in good condition.

CHANNEL: Cobble and dirt channel is in good condition. No freeboard on structure. High water mark 4 inches above the bottom of beams. No channel cross section required; channel dry at time of inspection.

SIGNS: Standard hazard markers at all 4 corners. Minor damage. Hazard barrier at SE corner. 35 mph posted speed limit.

UTILITIES: Telephone conduit along inside edge of east rail. Overhead power west.

NOTES: Replacement structure to begin construction in 2015.

WORK ACCOMPLISHED: None.

Maintenance Recommendations

Recommendation	Priority	Suggested Work Assignment
Maintain wearing surface.	Medium	Local Agency
Repair spall at SE corner abutment/wingwall base to prevent further undermining.	Low	Local Agency
Coat exposed rebar on railing to prevent further deterioration.	Low	Local Agency

Inspector's Signature: _____ 11/26/2014

Inspector Number and Name: 130 - Dave Hughes, Hughes Engineering

Idaho Transportation Department
Structure Inventory and Appraisal Update

Bridge Key:	19970	Structure Name:	93841A 2.45
(6)Features Intersected:	LAST CHANCE CANAL	(9)Location:	0.4 S. 1.4 E. EMMETT
Xref Structure Name:		Admin Jurisdiction:	4520 City of Emmett

IDENTIFICATION

(1)State:	16 Idaho
(2)District:	District 3
(3)County:	045 Gem
(4)Place Code:	Emmett
(5)Inventory Route:	151038410
(7)Facility Carried:	STC3841;SUBSTATION
(11)Milepoint:	002.413
(12)Base Hwy Network:	Not on Base Network
(13a)LRS Inventory Route:	
(13b)LRS Sub Route:	
(16)Latitude:	43° 52' 11"
(17)Longitude:	116° 28' 22"
(98)Border Bridge Code:	
(99)Border Bridge ID:	
Segment Code:	005590
Segment Under Rte:	
Segment Other Rte:	
Drawing Number:	
Project Key Number:	
Inspection Area:	932

STRUCTURE TYPE AND MATERIALS

(43a/b)Main Span Material/Design:
1 Concrete 2 Stringer/Girder

(44a/b)Approach Span Material/Design:

(45)No. of Spans Main Unit:	1
(46)No. of Approach Spans:	0
(107)Deck Type:	1 Concrete-Cast-in-Place
(108a)Wearing Surface:	6 Bituminous
(108b)Membrane:	0 None
(108c)Deck Protection:	None

Sufficiency Rating: 38.8

Deficiency: Functionally Obsolete

CLASSIFICATION

(112)NBIS Length:	Long Enough
(104)Highway System:	0 Not on NHS
(26):Functional Class:	16 Urban Minor Arterial
(100)Defense Highway:	0 Not a STRAHNET hwy
(101)Parallel Structure:	No || bridge exists
(102)Direction of Traffic:	2 2-way traffic
(103)Temporary Structure:	
(105)Federal Lands Highway:	0 N/A (NBI)
(110)Design Natl Network:	0 Not part of natl netwo
(20)Toll Facility:	3 On free road
(21)Custodian:	City/Municipal Hwy Agenc
(22)Owner:	City/Municipal Hwy Agenc
(37)Historical Significance:	3 Possibly eligible for

GEOMETRIC DATA

(48)Maximum Span Length:	29.9 ft
(49)Structure Length:	32 ft
Total Length:	32 ft
(50a)Curb/Sidewalk Width Lt:	0.0 ft
(50b)Curb/Sidewalk Width Rt:	0.0 ft
(51)Width Curb to Curb:	24.0 ft
(52)Width Out to Out:	25.9 ft
(32)App Roadway Width:	24 ft
(33)Median:	0 No median
(34)Skew:	62°
(35)Structure Flared:	0 No flare
(10)Vertical Clearance:	99.99 ft
(47)Total Horiz Clearance:	24.0 ft
(53)Min Vert Clr Over Deck:	99.99 ft
(54a)Min Vert Underclr Ref:	N Feature not hwy or RR
(54b)Min Vert Underclr:	0.0 ft
(55a)Min Lat Underclr Ref Rt:	N Feature not hwy or RR
(55b)Min Lat Underclr Rt:	0.0 ft
(56)Min Lat Underclr Lt:	0.0 ft

Idaho Transportation Department
Structure Inventory and Appraisal Update

Bridge Key:	19970	Structure Name:	93841A 2.45
(6)Features Intersected:	LAST CHANCE CANAL	(9)Location:	0.4 S. 1.4 E. EMMETT
Xref Structure Name:		Admin Jurisdiction:	4520 City of Emmett

LOAD RATING

(31)Design Load:	2 M 13.5 (H 15)
(64)Operating Rating:	24 tons / HS13.3
(66)Inventory Rating:	14 tons / HS7.8
(70)Posting:	5 At/Above Legal Loads
(41)Posting Status:	A Open, no restriction

CONDITION

(58)Deck:	6 Satisfactory
(59)Superstructure:	5 Fair
(60)Substructure:	5 Fair
(61)Channel/Protection:	7 Minor Damage
(62)Culvert:	N N/A (NBI)

AGE AND SERVICE

(27)Year Built:	1954		
(106)Year Reconstructed:	0		
(42a)Type of Service On:	1 Highway		
(42b)Type of Service Under:	5 Waterway		
(28a)Lanes On:	2	(28b)Lanes Under:	0
(29)ADT:	3600		
(30)Year of ADT:	2014		
(109)Truck ADT:	5%		
(19)Detour Length:	2 miles		
Speed Limit:	35 MPH		

APPRAISAL

(67)Structure Condition:	4 Minimum Tolerable
(68)Deck Geometry:	2 Intolerable - Replace
(69)Undrclear,Vert and Horiz:	N Not applicable (NBI)
(71)Waterway Adequacy:	7 Above Minimum
(72)Approach Alignment:	8 Equal Desirable Crit
(36)Traffic Safety Features:	
(a)Bridge Rail:	0 Substandard
(b)Transition:	0 Substandard
(c)Approach Rail:	0 Substandard
(d)Approach Rail Ends:	0 Substandard
(113)Scour Critical:	8 Stable Above Footing

PROPOSED IMPROVEMENTS

(75a)Type of Work:	31 Repl-Load Capacity
(75b)Work Done By:	1 Contract
(76)Length of Improvement:	53 ft
(94)Bridge Improvement Cost:	$385,000
(95)Rdwy Improvement Cost:	$39,000
(96)Total Project Cost:	$578,000
(97)Year of Cost Estimate:	2011
(114)Future ADT:	5400
(115)Year of Future ADT:	2034
YEAR PROGRAMMED:	2015

NAVIGATION DATA

(38)Navigation Control:	Permit Not Required
(39)Vertical Clearance:	
(40)Horizontal Clearance:	
(111)Pier Protection:	
(116)Lift Bridge Vert Clr:	

INSPECTION

(90)Inspection Date: 11/26/2014 (91)Inspection Frequency: 12 months

(92)Supplemental Inspections Frequency: (93)Date of Inspections:

(a)Fracture Critical Detail:	NA	(a)FC Inspection Date:	
(b)Underwater Inspection:	NA	(b)UW Inspection Date:	
(c)Fatique Detail (OS) Inspection:	NA	(c)Fatique Detail (OS) Date:	
(d)UBIT Inspection:	NA	(d)UBIT Date:	
(e)Confined Space Inspection:	NA	(e)Confined Space Date:	

Equipment Needed for Regular Inspection? None

Idaho Transportation Department
Structure Inventory and Appraisal Update

Bridge Key:	19970	Structure Name:	93841A 2.45
(6)Features Intersected:	LAST CHANCE CANAL	(9)Location:	0.4 S. 1.4 E. EMMETT
Xref Structure Name:		Admin Jurisdiction:	4520 City of Emmett

WEARING SURFACE and DEAD LOAD INFORMATION

Asphalt:	5.5 *inches*	**Concrete:**	0.0 *inches*
Granular:	0.0 *inches*	**Timber:**	0.0 *inches*

POSTING INFORMATION

WEIGHT

Load Analysis Date: 01/27/2011

Load Analysis Required: U Cannot Analyze

	Load Rating Analysis IR (tons)	OR (tons)		Recommended Posting(tons)	Actual Posting(tons)
H Truck	0	0			
HS Truck	14	24			
Type3 (3 axle)	0	0	**Type3 (3 axle)**		
Type 3S2 (5 axle)	0	0	**Type 3S2 (5 axle)**		
Type 3-3 (6 axle)	0	0	**Type 3-3 (6 axle)**		
			Max Axle		

HEIGHT

	Recommended	Actual
Height Posting:		

ACTUAL WIDTH POSTING

Single Lane All Vehicles:	N
Single Lane Trucks/Buses:	N

0.00 ft

Idaho Transportation Department
Bridge Field Inspection Report Photos

Bridge Key:	19970	Date:	11/26/2014
Structure Name:	93841A 2.45	Admin Jurisdiction:	City of Emmett
Features:	LAST CHANCE CANAL	District:	03

Looking North

Looking East

THIS PAGE INTENTIONALLY LEFT BLANK

Idaho Transportation Department
Pontis Field Inspection Report

Bridge Key:	28065	Structure Name:	X993230 1.37
(6)Features Intersected:	FARMERS COOP CANAL	(9)Location:	IN EMMETT; W. 12TH ST
Xref Structure Name:		Admin Jurisdiction:	4520 City of Emmett
		District:	03

Elm/Env	Element Description	Total Qty	Units	State 1	State 2	State 3	State 4
12/3	**Reinforced Concrete Deck**	936	sq.ft	936	0	0	0
510/3	***Wearing Surfaces***	936	*sq.ft*	936	0	0	0
109/2	**Prestressed Concrete Open Girder/Beam**	226	ft	158	61	7	0

Structure consists of nine (16 inch high) pre-stressed concrete double tees. Girders are generally in satisfactory condition with exception of 3 overstressed girders. Girders 2,4, and 9 (from north) have been overstressed at mid-span. Girder 2-closed cracking. Girder 4-cracking up to 0.025 inch wide. Girder 9-cracking up to 0.015 inch wide. North exterior girder has several spalls along bottom of exterior leg. No exposed pre-stressing strands.

215/2	**Reinforced Concrete Abutment**	156	ft	125	31	0	0

Reinforced concrete abutments are in good condition. Minor surface abrasion below high waterline. Minor cracking. Integral wingwalls are in good condition. SE and SW wingwalls are newer and support pedestrian bridge at south end.

330/3	**Metal Bridge Railing**	79	ft	79	0	0	0

Galvanized W-beam rail with steel channel posts and terminal end sections is in satisfactory condition. Wood end posts have minor checking. Minor damage at NE and NW corner terminal ends. Painted steel tube pedestrian railings north and south sides, good condition.

515/3	***Steel Protective Coating***	10753	*sq.ft*	10753	0	0	0

Idaho Transportation Department
Pontis Field Inspection Report

Bridge Key:	28065	Structure Name:	X993230 1.37
(6)Features Intersected:	FARMERS COOP CANAL	(9)Location:	IN EMMETT; W. 12TH ST
Xref Structure Name:		Admin Jurisdiction:	4520 City of Emmett
		District:	03

Additional Condition Information

ROADWAY APPROACHES: Asphalt approaches are in good condition.

CURBS: Concrete curbs are in fair condition. Horizontal cracking up to 1/16 inch wide, with spalling.

EMBANKMENT: Embankments are in good condition.

SIDEWALKS: Sidewalk on north side is in good condition. Minor surface abrasion. Pedestrian bridge along south edge of bridge; not attached to structure.

CHANNEL: Gravel channel is in good condition. No channel cross section required; channel dry at time of this inspection.

SIGNS: Standard hazard markers at all 4 corners of the bridge. 4 way stop at SE corner.

UTILITIES: Overhead power north.

NOTES: None

WORK ACCOMPLISHED: None.

Maintenance Recommendations

Recommendation	Priority	Suggested Work Assignment
Seal cracking in curbs.	Low	Local Agency

Inspector's Signature: _____ 10/31/2013

Inspector Number and Name: 130 - Dave Hughes, Hughes Engineering

Idaho Transportation Department
Structure Inventory and Appraisal Update

Bridge Key:	28065	Structure Name:	X993230 1.37
(6)Features Intersected:	FARMERS COOP CANAL	(9)Location:	IN EMMETT; W. 12TH ST
Xref Structure Name:		Admin Jurisdiction:	4520 City of Emmett

IDENTIFICATION

(1)State:	16 Idaho
(2)District:	District 3
(3)County:	045 Gem
(4)Place Code:	Emmett
(5)Inventory Route:	150000000
(7)Facility Carried:	W. 12TH STREET
(11)Milepoint:	101.358
(12)Base Hwy Network:	Not on Base Network
(13a)LRS Inventory Route:	
(13b)LRS Sub Route:	
(16)Latitude:	43° 51' 53"
(17)Longitude:	116° 30' 11"
(98)Border Bridge Code:	
(99)Border Bridge ID:	
Segment Code:	000403
Segment Under Rte:	
Segment Other Rte:	
Drawing Number:	16642
Project Key Number:	
Inspection Area:	932

STRUCTURE TYPE AND MATERIALS

(43a/b)Main Span Material/Design:
5 Prestressed Concrete 4 Tee Beam

(44a/b)Approach Span Material/Design:

(45)No. of Spans Main Unit:	1
(46)No. of Approach Spans:	0
(107)Deck Type:	1 Concrete-Cast-in-Place
(108a)Wearing Surface:	6 Bituminous
(108b)Membrane:	0 None
(108c)Deck Protection:	None

Sufficiency Rating: 68.6

Deficiency: Not Deficient

CLASSIFICATION

(112)NBIS Length:	Long Enough
(104)Highway System:	0 Not on NHS
(26):Functional Class:	17 Urban Collector
(100)Defense Highway:	0 Not a STRAHNET hwy
(101)Parallel Structure:	No || bridge exists
(102)Direction of Traffic:	2 2-way traffic
(103)Temporary Structure:	
(105)Federal Lands Highway:	0 N/A (NBI)
(110)Design Natl Network:	0 Not part of natl netwo
(20)Toll Facility:	3 On free road
(21)Custodian:	City/Municipal Hwy Agenc
(22)Owner:	City/Municipal Hwy Agenc
(37)Historical Significance:	3 Possibly eligible for

GEOMETRIC DATA

(48)Maximum Span Length:	24.9 ft
(49)Structure Length:	26 ft
Total Length:	26 ft
(50a)Curb/Sidewalk Width Lt:	0.0 ft
(50b)Curb/Sidewalk Width Rt:	5.2 ft
(51)Width Curb to Curb:	29.5 ft
(52)Width Out to Out:	36.1 ft
(32)App Roadway Width:	25 ft
(33)Median:	0 No median
(34)Skew:	0°
(35)Structure Flared:	0 No flare
(10)Vertical Clearance:	99.99 ft
(47)Total Horiz Clearance:	29.5 ft
(53)Min Vert Clr Over Deck:	99.99 ft
(54a)Min Vert Underclr Ref:	N Feature not hwy or RR
(54b)Min Vert Underclr:	0.0 ft
(55a)Min Lat Underclr Ref Rt:	N Feature not hwy or RR
(55b)Min Lat Underclr Rt:	0.0 ft
(56)Min Lat Underclr Lt:	0.0 ft

Idaho Transportation Department
Structure Inventory and Appraisal Update

Bridge Key:	28065	Structure Name:	X993230 1.37
(6)Features Intersected:	FARMERS COOP CANAL	(9)Location:	IN EMMETT; W. 12TH ST
Xref Structure Name:		Admin Jurisdiction:	4520 City of Emmett

LOAD RATING

(31)Design Load:	5 MS 18 (HS 20)
(64)Operating Rating:	54 tons / HS29.8
(66)Inventory Rating:	39 tons / HS21.5
(70)Posting:	5 At/Above Legal Loads
(41)Posting Status:	A Open, no restriction

CONDITION

(58)Deck:	7 Good
(59)Superstructure:	5 Fair
(60)Substructure:	7 Good
(61)Channel/Protection:	8 Protected
(62)Culvert:	N N/A (NBI)

AGE AND SERVICE

(27)Year Built:	1965		
(106)Year Reconstructed:	0		
(42a)Type of Service On:	5 Highway-pedestrian		
(42b)Type of Service Under:	5 Waterway		
(28a)Lanes On:	2	(28b)Lanes Under:	0
(29)ADT:	3200		
(30)Year of ADT:	2014		
(109)Truck ADT:	10%		
(19)Detour Length:	1 miles		
Speed Limit:	0 MPH		

APPRAISAL

(67)Structure Condition:	5 Above Min Tolerable
(68)Deck Geometry:	4 Tolerable
(69)Undrclear,Vert and Horiz:	N Not applicable (NBI)
(71)Waterway Adequacy:	8 Equal Desirable
(72)Approach Alignment:	8 Equal Desirable Crit
(36)Traffic Safety Features:	
(a)Bridge Rail:	0 Substandard
(b)Transition:	0 Substandard
(c)Approach Rail:	0 Substandard
(d)Approach Rail Ends:	0 Substandard
(113)Scour Critical:	8 Stable Above Footing

PROPOSED IMPROVEMENTS

(75a)Type of Work:	31 Repl-Load Capacity
(75b)Work Done By:	1 Contract
(76)Length of Improvement:	46 ft
(94)Bridge Improvement Cost:	$440,000
(95)Rdwy Improvement Cost:	$44,000
(96)Total Project Cost:	$660,000
(97)Year of Cost Estimate:	2011
(114)Future ADT:	4800
(115)Year of Future ADT:	2034
YEAR PROGRAMMED:	

NAVIGATION DATA

(38)Navigation Control:	Permit Not Required
(39)Vertical Clearance:	
(40)Horizontal Clearance:	
(111)Pier Protection:	
(116)Lift Bridge Vert Clr:	

INSPECTION

(90)Inspection Date: 10/31/2013 (91)Inspection Frequency: 24 months

(92)Supplemental Inspections Frequency: (93)Date of Inspections:

(a)Fracture Critical Detail:	NA	(a)FC Inspection Date:	
(b)Underwater Inspection:	NA	(b)UW Inspection Date:	
(c)Fatique Detail (OS) Inspection:	NA	(c)Fatique Detail (OS) Date:	
(d)UBIT Inspection:	NA	(d)UBIT Date:	
(e)Confined Space Inspection:	NA	(e)Confined Space Date:	

Equipment Needed for Regular Inspection? None

Idaho Transportation Department
Structure Inventory and Appraisal Update

Bridge Key:	28065	Structure Name:	X993230 1.37
(6)Features Intersected:	FARMERS COOP CANAL	(9)Location:	IN EMMETT; W. 12TH ST
Xref Structure Name:		Admin Jurisdiction:	4520 City of Emmett

WEARING SURFACE and DEAD LOAD INFORMATION

Asphalt:	2.0 *inches*	**Concrete:**	0.0 *inches*
Granular:	0.0 *inches*	**Timber:**	0.0 *inches*

POSTING INFORMATION

WEIGHT

Load Analysis Date: 06/27/1983

Load Analysis Required: N Analysis Complete

	Load Rating Analysis IR (tons)	OR (tons)		Recommended Posting(tons)	Actual Posting(tons)
H Truck	22	30			
HS Truck	39	54			
Type3 (3 axle)	32	52	**Type3 (3 axle)**		
Type 3S2 (5 axle)	54	88	**Type 3S2 (5 axle)**		
Type 3-3 (6 axle)	67	99	**Type 3-3 (6 axle)**		
			Max Axle		

HEIGHT

	Recommended	Actual
Height Posting:		

ACTUAL WIDTH POSTING

Single Lane All Vehicles:	N
Single Lane Trucks/Buses:	N

0.00 ft

Idaho Transportation Department
Bridge Field Inspection Report Photos

Bridge Key:	28065	Date:	10/31/2013
Structure Name:	X993230 1.37	Admin Jurisdiction:	City of Emmett
Features:	FARMERS COOP CANAL	District:	03

Looking East

Looking South

Idaho Transportation Department
Bridge Field Inspection Report Photos

Bridge Key:	28065	Date:	10/31/2013
Structure Name:	X993230 1.37	Admin Jurisdiction:	City of Emmett
Features:	FARMERS COOP CANAL	District:	03

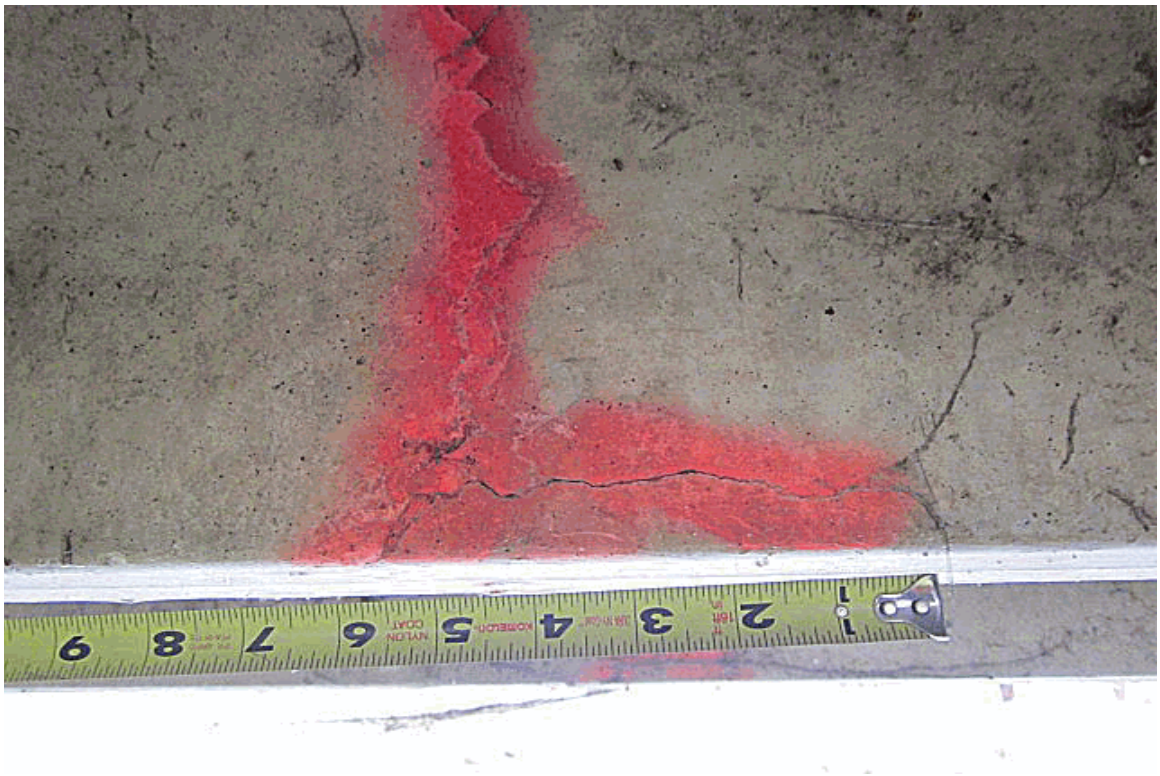

Overstressed cracking on girder #9

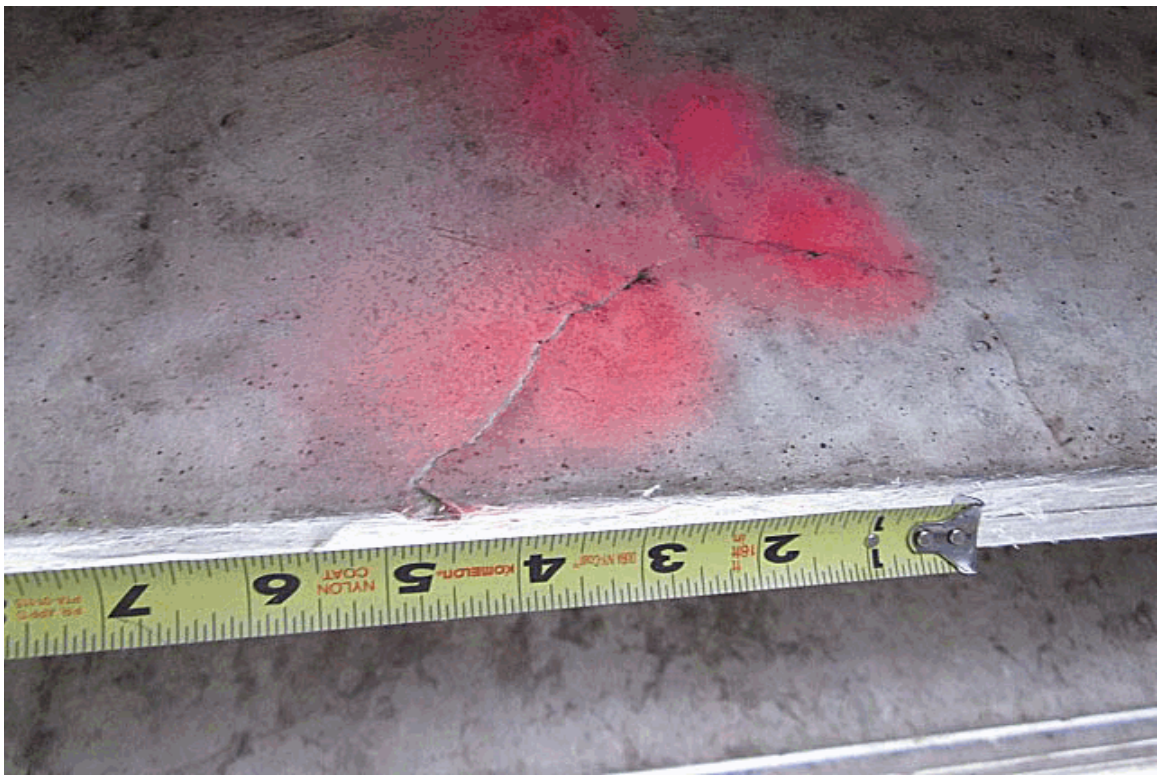

Overstressed cracking on girder #4

THIS PAGE INTENTIONALLY LEFT BLANK

Idaho Transportation Department
Pontis Field Inspection Report

Bridge Key:	28136	Structure Name:	X993230 4.57
(6)Features Intersected:	FARMERS COOP CANAL	(9)Location:	IN EMMETT;WARDWELL ST
Xref Structure Name:		Admin Jurisdiction:	4520 City of Emmett
		District:	03

Elm/Env	Element Description	Total Qty	Units	State 1	State 2	State 3	State 4
31/3	**Timber Deck**	1044	sq.ft	1044	0	0	0
510/3	***Wearing Surfaces***	1044	*sq.ft*	1044	0	0	0
111/2	**Timber Open Girder/Beam**	387	ft	379	8	0	0

Structure consist of 18 (10 inch deep stem) laminated timber tee beams. Exterior beams are wider. Beams are in very good condition. A few minor checks up to 1/16 inch wide on some beams. Exterior beams have minor weathering along exterior faces.

215/2	**Reinforced Concrete Abutment**	132	ft	125	7	0	0

Reinforced concrete abutments are in very good condition. Minor hairline cracking. Minor surface abrasion below high water mark. Integral wingwalls are in very good condition. Minor spalls and cracks. Laminated timber sill plates are in very good condition. Timber backwalls are in good condition.

332/3	**Timber Bridge Railing**	56	ft	45	11	0	0

Laminated timber bridge railing is in good condition. Moderate weathering and checking. Minor splitting and decay on top of posts. Top rails have minor deterioration. West railing taller than east.

Idaho Transportation Department
Pontis Field Inspection Report

Bridge Key:	28136	Structure Name:	X993230 4.57
(6)Features Intersected:	FARMERS COOP CANAL	(9)Location:	IN EMMETT;WARDWELL ST
Xref Structure Name:		Admin Jurisdiction:	4520 City of Emmett
		District:	03

Additional Condition Information

ROADWAY APPROACHES: Asphalt approaches are in satisfactory condition. ¼ inch transverse cracking at bridge edges, with asphalt raised along crack edges. ½ inch settlement both approaches. 1/16 inch longitudinal cracking in approaches.

EMBANKMENT: Gravel embankments are in good condition.

CHANNEL: Cobble channel is in good condition. No channel cross section required; water not touching substructure.

SIGNS: Standard hazard markers at all 4 corners.

GUARDRAIL: Concrete jersey rail terminal ends at all 4 corners.

UTILITIES: Overhead power east.

NOTES: None

WORK ACCOMPLISHED: None.

Maintenance Recommendations

Recommendation	Priority	Suggested Work Assignment
Re-seal bridge railing to prolong life.	Low	Local Agency
Seal exterior surfaces of timber girders to prolong life.	Low	Local Agency
Seal cracking in asphalt overlay.	Low	Local Agency

Inspector's Signature: _____ 10/31/2013

Inspector Number and Name: 130 - Dave Hughes, Hughes Engineering

Idaho Transportation Department
Structure Inventory and Appraisal Update

Bridge Key:	28136	Structure Name:	X993230 4.57
(6)Features Intersected:	FARMERS COOP CANAL	(9)Location:	IN EMMETT;WARDWELL ST
Xref Structure Name:		Admin Jurisdiction:	4520 City of Emmett

IDENTIFICATION

(1)State:	16 Idaho
(2)District:	District 3
(3)County:	045 Gem
(4)Place Code:	Emmett
(5)Inventory Route:	140000000
(7)Facility Carried:	WARDWELL STREET
(11)Milepoint:	100.410
(12)Base Hwy Network:	Not on Base Network
(13a)LRS Inventory Route:	
(13b)LRS Sub Route:	
(16)Latitude:	43° 52' 40"
(17)Longitude:	116° 29' 52"
(98)Border Bridge Code:	
(99)Border Bridge ID:	
Segment Code:	000408
Segment Under Rte:	
Segment Other Rte:	
Drawing Number:	16628
Project Key Number:	
Inspection Area:	932

STRUCTURE TYPE AND MATERIALS

(43a/b)Main Span Material/Design:
7 Wood or Timber 4 Tee Beam

(44a/b)Approach Span Material/Design:

(45)No. of Spans Main Unit:	1
(46)No. of Approach Spans:	0
(107)Deck Type:	8 Wood or Timber
(108a)Wearing Surface:	6 Bituminous
(108b)Membrane:	0 None
(108c)Deck Protection:	None

Sufficiency Rating: 93.9

Deficiency: Not Deficient

CLASSIFICATION

(112)NBIS Length:	Long Enough
(104)Highway System:	0 Not on NHS
(26):Functional Class:	19 Urban Local
(100)Defense Highway:	0 Not a STRAHNET hwy
(101)Parallel Structure:	No || bridge exists
(102)Direction of Traffic:	2 2-way traffic
(103)Temporary Structure:	
(105)Federal Lands Highway:	0 N/A (NBI)
(110)Design Natl Network:	0 Not part of natl netwo
(20)Toll Facility:	3 On free road
(21)Custodian:	City/Municipal Hwy Agenc
(22)Owner:	City/Municipal Hwy Agenc
(37)Historical Significance:	4 Hist sign not determin

GEOMETRIC DATA

(48)Maximum Span Length:	26.9 ft
(49)Structure Length:	28 ft
Total Length:	28 ft
(50a)Curb/Sidewalk Width Lt:	0.0 ft
(50b)Curb/Sidewalk Width Rt:	0.0 ft
(51)Width Curb to Curb:	36.4 ft
(52)Width Out to Out:	37.1 ft
(32)App Roadway Width:	19 ft
(33)Median:	0 No median
(34)Skew:	0°
(35)Structure Flared:	0 No flare
(10)Vertical Clearance:	99.99 ft
(47)Total Horiz Clearance:	36.1 ft
(53)Min Vert Clr Over Deck:	99.99 ft
(54a)Min Vert Underclr Ref:	N Feature not hwy or RR
(54b)Min Vert Underclr:	0.0 ft
(55a)Min Lat Underclr Ref Rt:	N Feature not hwy or RR
(55b)Min Lat Underclr Rt:	0.0 ft
(56)Min Lat Underclr Lt:	0.0 ft

Idaho Transportation Department
Structure Inventory and Appraisal Update

Bridge Key:	28136	Structure Name:	X993230 4.57
(6)Features Intersected:	FARMERS COOP CANAL	(9)Location:	IN EMMETT;WARDWELL ST
Xref Structure Name:		Admin Jurisdiction:	4520 City of Emmett

LOAD RATING

(31)Design Load:	5 MS 18 (HS 20)
(64)Operating Rating:	42 tons / HS23.1
(66)Inventory Rating:	31 tons / HS17.1
(70)Posting:	5 At/Above Legal Loads
(41)Posting Status:	A Open, no restriction

CONDITION

(58)Deck:	8 Very Good
(59)Superstructure:	8 Very Good
(60)Substructure:	8 Very Good
(61)Channel/Protection:	8 Protected
(62)Culvert:	N N/A (NBI)

AGE AND SERVICE

(27)Year Built:	1990		
(106)Year Reconstructed:	0		
(42a)Type of Service On:	1 Highway		
(42b)Type of Service Under:	5 Waterway		
(28a)Lanes On:	2	(28b)Lanes Under:	0
(29)ADT:	400		
(30)Year of ADT:	2014		
(109)Truck ADT:	5%		
(19)Detour Length:	1 miles		
Speed Limit:	0 MPH		

APPRAISAL

(67)Structure Condition:	7 Above Min Criteria
(68)Deck Geometry:	9 Above Desirable Crit
(69)Undrclear,Vert and Horiz:	N Not applicable (NBI)
(71)Waterway Adequacy:	8 Equal Desirable
(72)Approach Alignment:	7 Above Min Criteria
(36)Traffic Safety Features:	
(a)Bridge Rail:	0 Substandard
(b)Transition:	0 Substandard
(c)Approach Rail:	0 Substandard
(d)Approach Rail Ends:	0 Substandard
(113)Scour Critical:	8 Stable Above Footing

PROPOSED IMPROVEMENTS

(75a)Type of Work:	
(75b)Work Done By:	
(76)Length of Improvement:	
(94)Bridge Improvement Cost:	
(95)Rdwy Improvement Cost:	
(96)Total Project Cost:	
(97)Year of Cost Estimate:	
(114)Future ADT:	600
(115)Year of Future ADT:	2034
YEAR PROGRAMMED:	

NAVIGATION DATA

(38)Navigation Control:	Permit Not Required
(39)Vertical Clearance:	
(40)Horizontal Clearance:	
(111)Pier Protection:	
(116)Lift Bridge Vert Clr:	

INSPECTION

(90)Inspection Date: 10/31/2013 (91)Inspection Frequency: 24 months

(92)Supplemental Inspections Frequency: (93)Date of Inspections:

(a)Fracture Critical Detail:	NA	(a)FC Inspection Date:	
(b)Underwater Inspection:	NA	(b)UW Inspection Date:	
(c)Fatique Detail (OS) Inspection:	NA	(c)Fatique Detail (OS) Date:	
(d)UBIT Inspection:	NA	(d)UBIT Date:	
(e)Confined Space Inspection:	NA	(e)Confined Space Date:	

Equipment Needed for Regular Inspection? None

Idaho Transportation Department
Structure Inventory and Appraisal Update

Bridge Key:	28136	Structure Name:	X993230 4.57
(6)Features Intersected:	FARMERS COOP CANAL	(9)Location:	IN EMMETT;WARDWELL ST
Xref Structure Name:		Admin Jurisdiction:	4520 City of Emmett

WEARING SURFACE and DEAD LOAD INFORMATION

Asphalt:	3.0 *inches*	**Concrete:**	0.0 *inches*
Granular:	0.0 *inches*	**Timber:**	0.0 *inches*

POSTING INFORMATION

WEIGHT

Load Analysis Date: 02/13/1992

Load Analysis Required: N Analysis Complete

	Load Rating Analysis IR (tons)	OR (tons)		Recommended Posting(tons)	Actual Posting(tons)
H Truck	22	24			
HS Truck	31	42			
Type3 (3 axle)	25	35	**Type3 (3 axle)**		
Type 3S2 (5 axle)	47	65	**Type 3S2 (5 axle)**		
Type 3-3 (6 axle)	50	70	**Type 3-3 (6 axle)**		
			Max Axle		

HEIGHT

	Recommended	Actual
Height Posting:		

ACTUAL WIDTH POSTING

Single Lane All Vehicles:	N
Single Lane Trucks/Buses:	N

0.00 ft

Idaho Transportation Department
Bridge Field Inspection Report Photos

Bridge Key:	28136	Date:	10/31/2013
Structure Name:	X993230 4.57	Admin Jurisdiction:	City of Emmett
Features:	FARMERS COOP CANAL	District:	03

Looking North

Looking East

Idaho Transportation Department
Pontis Field Inspection Report

Bridge Key:	28170	Structure Name:	X993230 31.17
(6)Features Intersected:	FARMERS COOP CANAL	(9)Location:	IN EMMETT;W.4TH ST
Xref Structure Name:		Admin Jurisdiction:	4520 City of Emmett
		District:	03

Elm/Env	Element Description	Total Qty	Units	State 1	State 2	State 3	State 4
12/3	**Reinforced Concrete Deck**	861	sq.ft	861	0	0	0
510/3	***Wearing Surfaces***	861	*sq.ft*	861	0	0	0
110/2	**Reinforced Concrete Open Girder/Beam**	131	ft	131	0	0	0

Structure consists of six cast-in-place concrete beams. Beams are in good condition with minor hairline flexure cracking.

215/2	**Reinforced Concrete Abutment**	111	ft	89	22	0	0

Reinforced concrete abutments are in satisfactory condition. Skim coating over abutments has minor cracking. Minor efflorescence. Integral wingwalls are in satisfactory condition. Cracking and deterioration of skim coating on NE wingwall.

330/3	**Metal Bridge Railing**	7	ft	5	2	0	0

Painted W-beam rail with steel channel posts and terminal end sections is in satisfactory condition. Minor freckled surface rust where paint has failed. Painted pipe railing on top of south curb is in satisfactory condition.

515/3	***Steel Protective Coating***	10753	*sq.ft*	10753	0	0	0

Idaho Transportation Department
Pontis Field Inspection Report

Bridge Key:	28170	Structure Name:	X993230 31.17
(6)Features Intersected:	FARMERS COOP CANAL	(9)Location:	IN EMMETT;W.4TH ST
Xref Structure Name:		Admin Jurisdiction:	4520 City of Emmett
		District:	03

Additional Condition Information

ROADWAY APPROACHES: Asphalt approaches are in fair condition. Transverse and random 1/8 inch cracking both approaches. Impending potholes west approach along edge of deck cracking.

CURBS: Concrete curbs are in fair condition. Minor spalling exposing rebar along base of north curb.

EMBANKMENT: Embankments are well vegetated and in good condition.

SIDEWALK: Sidewalk along south edge is in good condition.

CHANNEL: Gravel channel is in good condition. No channel cross section is required; channel dry at time of this inspection.

SIGNS: Standard hazard markers at 3 corners of the bridge. Missing at SE corner.

UTILITIES: 2 telephone conduits along top of sidewalk south edge. 6 inch irrigation line on north side of bridge. Overhead power south.

NOTES: None

WORK ACCOMPLISHED: None.

Maintenance Recommendations

Recommendation	Priority	Suggested Work Assignment
Paint bridge railing and posts.	Low	Local Agency
Maintain approaches.	Low	Local Agency
Paint and/or cover exposed rebar in concrete curb.	Low	Local Agency

Inspector's Signature: _____ 10/31/2013

Inspector Number and Name: 130 - Dave Hughes, Hughes Engineering

Idaho Transportation Department
Structure Inventory and Appraisal Update

Bridge Key:	28170	Structure Name:	X993230 31.17
(6)Features Intersected:	FARMERS COOP CANAL	(9)Location:	IN EMMETT;W.4TH ST
Xref Structure Name:		Admin Jurisdiction:	4520 City of Emmett

IDENTIFICATION

(1)State:	16 Idaho
(2)District:	District 3
(3)County:	045 Gem
(4)Place Code:	Emmett
(5)Inventory Route:	140000000
(7)Facility Carried:	W. 4TH STREET
(11)Milepoint:	100.435
(12)Base Hwy Network:	Not on Base Network
(13a)LRS Inventory Route:	
(13b)LRS Sub Route:	
(16)Latitude:	43° 52' 19"
(17)Longitude:	116° 30' 11"
(98)Border Bridge Code:	
(99)Border Bridge ID:	
Segment Code:	000417
Segment Under Rte:	
Segment Other Rte:	
Drawing Number:	16626
Project Key Number:	
Inspection Area:	932

STRUCTURE TYPE AND MATERIALS

(43a/b)Main Span Material/Design:
1 Concrete 2 Stringer/Girder

(44a/b)Approach Span Material/Design:

(45)No. of Spans Main Unit:	1
(46)No. of Approach Spans:	0
(107)Deck Type:	1 Concrete-Cast-in-Place
(108a)Wearing Surface:	6 Bituminous
(108b)Membrane:	0 None
(108c)Deck Protection:	None

Sufficiency Rating: 92.3

Deficiency: Not Deficient

CLASSIFICATION

(112)NBIS Length:	Long Enough
(104)Highway System:	0 Not on NHS
(26):Functional Class:	17 Urban Collector
(100)Defense Highway:	0 Not a STRAHNET hwy
(101)Parallel Structure:	No || bridge exists
(102)Direction of Traffic:	2 2-way traffic
(103)Temporary Structure:	
(105)Federal Lands Highway:	0 N/A (NBI)
(110)Design Natl Network:	0 Not part of natl netwo
(20)Toll Facility:	3 On free road
(21)Custodian:	City/Municipal Hwy Agenc
(22)Owner:	City/Municipal Hwy Agenc
(37)Historical Significance:	3 Possibly eligible for

GEOMETRIC DATA

(48)Maximum Span Length:	22.0 ft
(49)Structure Length:	23 ft
Total Length:	23 ft
(50a)Curb/Sidewalk Width Lt:	0.7 ft
(50b)Curb/Sidewalk Width Rt:	3.9 ft
(51)Width Curb to Curb:	30.8 ft
(52)Width Out to Out:	37.4 ft
(32)App Roadway Width:	25 ft
(33)Median:	0 No median
(34)Skew:	0°
(35)Structure Flared:	0 No flare
(10)Vertical Clearance:	99.99 ft
(47)Total Horiz Clearance:	30.8 ft
(53)Min Vert Clr Over Deck:	99.99 ft
(54a)Min Vert Underclr Ref:	N Feature not hwy or RR
(54b)Min Vert Underclr:	0.0 ft
(55a)Min Lat Underclr Ref Rt:	N Feature not hwy or RR
(55b)Min Lat Underclr Rt:	0.0 ft
(56)Min Lat Underclr Lt:	0.0 ft

Idaho Transportation Department
Structure Inventory and Appraisal Update

Bridge Key:	28170	Structure Name:	X993230 31.17
(6)Features Intersected:	FARMERS COOP CANAL	(9)Location:	IN EMMETT;W.4TH ST
Xref Structure Name:		Admin Jurisdiction:	4520 City of Emmett

LOAD RATING

(31)Design Load:	5 MS 18 (HS 20)
(64)Operating Rating:	55 tons / HS30.3
(66)Inventory Rating:	39 tons / HS21.5
(70)Posting:	5 At/Above Legal Loads
(41)Posting Status:	A Open, no restriction

CONDITION

(58)Deck:	7 Good
(59)Superstructure:	7 Good
(60)Substructure:	6 Satisfactory
(61)Channel/Protection:	8 Protected
(62)Culvert:	N N/A (NBI)

AGE AND SERVICE

(27)Year Built:	1960		
(106)Year Reconstructed:	0		
(42a)Type of Service On:	5 Highway-pedestrian		
(42b)Type of Service Under:	5 Waterway		
(28a)Lanes On:	2	(28b)Lanes Under:	0
(29)ADT:	2300		
(30)Year of ADT:	2014		
(109)Truck ADT:	10%		
(19)Detour Length:	1 miles		
Speed Limit:	0 MPH		

APPRAISAL

(67)Structure Condition:	6 Equal Min Criteria
(68)Deck Geometry:	4 Tolerable
(69)Undrclear,Vert and Horiz:	N Not applicable (NBI)
(71)Waterway Adequacy:	8 Equal Desirable
(72)Approach Alignment:	8 Equal Desirable Crit
(36)Traffic Safety Features:	
(a)Bridge Rail:	0 Substandard
(b)Transition:	0 Substandard
(c)Approach Rail:	0 Substandard
(d)Approach Rail Ends:	0 Substandard
(113)Scour Critical:	8 Stable Above Footing

PROPOSED IMPROVEMENTS

(75a)Type of Work:	
(75b)Work Done By:	
(76)Length of Improvement:	
(94)Bridge Improvement Cost:	
(95)Rdwy Improvement Cost:	
(96)Total Project Cost:	
(97)Year of Cost Estimate:	
(114)Future ADT:	3450
(115)Year of Future ADT:	2034
YEAR PROGRAMMED:	

NAVIGATION DATA

(38)Navigation Control:	Permit Not Required
(39)Vertical Clearance:	
(40)Horizontal Clearance:	
(111)Pier Protection:	
(116)Lift Bridge Vert Clr:	

INSPECTION

(90)Inspection Date: 10/31/2013 (91)Inspection Frequency: 48 months

(92)Supplemental Inspections Frequency: (93)Date of Inspections:

(a)Fracture Critical Detail:	NA	(a)FC Inspection Date:	
(b)Underwater Inspection:	NA	(b)UW Inspection Date:	
(c)Fatique Detail (OS) Inspection:	NA	(c)Fatique Detail (OS) Date:	
(d)UBIT Inspection:	NA	(d)UBIT Date:	
(e)Confined Space Inspection:	NA	(e)Confined Space Date:	

Equipment Needed for Regular Inspection? None

Idaho Transportation Department
Structure Inventory and Appraisal Update

Bridge Key:	28170	Structure Name:	X993230 31.17
(6)Features Intersected:	FARMERS COOP CANAL	(9)Location:	IN EMMETT;W.4TH ST
Xref Structure Name:		Admin Jurisdiction:	4520 City of Emmett

WEARING SURFACE and DEAD LOAD INFORMATION

Asphalt:	1.0 *inches*	**Concrete:**	0.0 *inches*
Granular:	0.0 *inches*	**Timber:**	0.0 *inches*

POSTING INFORMATION

WEIGHT

Load Analysis Date: 06/27/1983

Load Analysis Required: N Analysis Complete

	Load Rating Analysis IR (tons)	OR (tons)		Recommended Posting(tons)	Actual Posting(tons)
H Truck	22	30			
HS Truck	39	55			
Type3 (3 axle)	39	57	**Type3 (3 axle)**		
Type 3S2 (5 axle)	64	94	**Type 3S2 (5 axle)**		
Type 3-3 (6 axle)	80	99	**Type 3-3 (6 axle)**		
			Max Axle		

HEIGHT

	Recommended	Actual
Height Posting:		

ACTUAL WIDTH POSTING

Single Lane All Vehicles:	N
Single Lane Trucks/Buses:	N

0.00 ft

Idaho Transportation Department
Bridge Field Inspection Report Photos

Bridge Key:	28170	Date:	10/31/2013
Structure Name:	X993230 31.17	Admin Jurisdiction:	City of Emmett
Features:	FARMERS COOP CANAL	District:	03

Looking East

Looking North

Idaho Transportation Department
Pontis Field Inspection Report

Bridge Key:	28175	Structure Name:	X993230 31.28
(6)Features Intersected:	FARMERS COOP CANAL	(9)Location:	IN EMMETT;W 2ND ST
Xref Structure Name:		Admin Jurisdiction:	4520 City of Emmett
		District:	03

Elm/Env	Element Description	Total Qty	Units	State 1	State 2	State 3	State 4
12/3	**Reinforced Concrete Deck**	743	sq.ft	521	222	0	0
	Concrete deck is in fair condition. Minor wear of concrete deck where exposed to traffic. No staining or efflorescence on deck underside.						
510/3	***Wearing Surfaces***	712	*sq.ft*	712	0	0	0
	Thin asphalt overlay over concrete deck is in satisfactory condition. Small pothole at NE corner.						
1090/3	***Exposed Rebar***	222	*sq.ft*	0	222	0	0
	Poor construction left rock pockets and exposed steel reinforcing on deck underside. Exposed steel has moderate surface rust, with minimal section loss.						
1130/3	***Cracking (RC and Other)***	50	*sq.ft*	50	0	0	0
	Minimal hairline cracking.						
110/2	**Reinforced Concrete Open Girder/Beam**	207	ft	118	89	0	0
	Structure consists of nine cast-in-place concrete beams. Beams are in poor condition due to poor construction.						
1080/2	***Delamination/Spall/Patched Area***	6	*ft*	0	6	0	0
	Delamination occurring on prior patched areas.						
1090/2	***Exposed Rebar***	83	*ft*	0	83	0	0
	Poor construction left many rock pockets and exposed reinforcing steel on most of the beams. Exposed reinforcing steel has moderate surface rusting with minimal section loss.						
1130/2	***Cracking (RC and Other)***	6	*ft*	6	0	0	0
	Concrete is in fair condition with minor hairline flexure cracking. Prior patched areas are in fair condition with some cracking.						
215/2	**Reinforced Concrete Abutment**	91	ft	0	31	60	0
	Reinforced concrete abutments are in satisfactory condition. Integral wingwalls are in satisfactory condition.						
1130/2	***Cracking (RC and Other)***	4	*ft*	0	4	0	0
	Minor cracking at wingwall/abutment interface.						
1190/2	***Abrasion/Wear(PSC/RC)***	27	*ft*	0	27	0	0
	Moderate surface abrasion below water line exposing up to 1/4 inch of aggregate.						

Idaho Transportation Department
Pontis Field Inspection Report

Bridge Key:	28175	Structure Name:	X993230 31.28
(6)Features Intersected:	FARMERS COOP CANAL	(9)Location:	IN EMMETT;W 2ND ST
Xref Structure Name:		Admin Jurisdiction:	4520 City of Emmett
		District:	03

Elm/Env	Element Description	Total Qty	Units	State 1	State 2	State 3	State 4
6000/2	**Scour**	60	ft	0	0	60	0
	Both abutment footings are exposed up to 10 inches. No undermining.						
331/3	**Reinforced Concrete Bridge Railing**	49	ft	0	49	0	0
	Concrete bridge railing is in fair condition.						
1080/3	**Delamination/Spall/Patched Area**	35	ft	0	35	0	0
	Minor cracking and spalling.						
1090/3	**Exposed Rebar**	14	ft	0	14	0	0
	Exposed reinforcing on south exterior surface with light rusting. Exposed reinforcement at corners.						

Idaho Transportation Department
Pontis Field Inspection Report

Bridge Key:	28175	Structure Name:	X993230 31.28
(6)Features Intersected:	FARMERS COOP CANAL	(9)Location:	IN EMMETT;W 2ND ST
Xref Structure Name:		Admin Jurisdiction:	4520 City of Emmett
		District:	03

Additional Condition Information

ROADWAY APPROACHES: Asphalt roadway approaches are in fair condition with 1/8 inch transverse cracking and minor settling. East approach the worst. Intersections on both ends of bridge.

EMBANKMENT: Embankments are in good condition. Areas of concrete apron on embankments at corners.

CHANNEL: Cobble channel is in satisfactory condition. Up to 10 inches of exposed footings. Channel cross section taken 12/5/12.

SIGNS: Standard hazard markers at all four corners. Minor damage. Mounted low. 25 mph posted speed limit.

UTILITIES: Telephone conduit along south bridge rail. Overhead power south.

NOTES: Superstructure rating of 4 due to exposed rusting reinforcing from poor construction. Scour Committee reviewed 3/191/5, item 113 changed to a U(L), footing exposed, no undermining, unknown foundation.

WORK ACCOMPLISHED: None.

Maintenance Recommendations

Recommendation	Priority	Suggested Work Assignment
Paint, patch and seal all exposed steel and rebar on concrete girders.	Low	Local Agency
Paint, patch and seal all exposed steel and rebar on bridge rail.	Low	Local Agency
Paint, patch and seal all exposed steel in deck soffit.	Low	Local Agency
Maintain approaches.	Medium	Local Agency
Add rip rap along abutment footings to prevent further scour.	Low	Local Agency

Inspector's Signature: _____ 10/31/2014

Inspector Number and Name: 130 - Dave Hughes, Hughes Engineering

Idaho Transportation Department
Structure Inventory and Appraisal Update

Bridge Key:	28175	Structure Name:	X993230 31.28
(6)Features Intersected:	FARMERS COOP CANAL	(9)Location:	IN EMMETT;W 2ND ST
Xref Structure Name:		Admin Jurisdiction:	4520 City of Emmett

IDENTIFICATION

(1)State:	16 Idaho
(2)District:	District 3
(3)County:	045 Gem
(4)Place Code:	Emmett
(5)Inventory Route:	140000000
(7)Facility Carried:	W 2ND STREET
(11)Milepoint:	100.212
(12)Base Hwy Network:	Not on Base Network
(13a)LRS Inventory Route:	
(13b)LRS Sub Route:	
(16)Latitude:	43° 52' 25"
(17)Longitude:	116° 30' 11"
(98)Border Bridge Code:	
(99)Border Bridge ID:	
Segment Code:	000410
Segment Under Rte:	
Segment Other Rte:	
Drawing Number:	
Project Key Number:	
Inspection Area:	932

STRUCTURE TYPE AND MATERIALS

(43a/b)Main Span Material/Design:
1 Concrete 2 Stringer/Girder

(44a/b)Approach Span Material/Design:

(45)No. of Spans Main Unit:	1
(46)No. of Approach Spans:	0
(107)Deck Type:	1 Concrete-Cast-in-Place
(108a)Wearing Surface:	6 Bituminous
(108b)Membrane:	0 None
(108c)Deck Protection:	None

Sufficiency Rating: 69.0

Deficiency: Structurally Deficient

CLASSIFICATION

(112)NBIS Length:	Long Enough
(104)Highway System:	0 Not on NHS
(26):Functional Class:	19 Urban Local
(100)Defense Highway:	0 Not a STRAHNET hwy
(101)Parallel Structure:	No || bridge exists
(102)Direction of Traffic:	2 2-way traffic
(103)Temporary Structure:	
(105)Federal Lands Highway:	0 N/A (NBI)
(110)Design Natl Network:	0 Not part of natl netwo
(20)Toll Facility:	3 On free road
(21)Custodian:	City/Municipal Hwy Agenc
(22)Owner:	City/Municipal Hwy Agenc
(37)Historical Significance:	3 Possibly eligible for

GEOMETRIC DATA

(48)Maximum Span Length:	23.0 ft
(49)Structure Length:	25 ft
Total Length:	25 ft
(50a)Curb/Sidewalk Width Lt:	0.0 ft
(50b)Curb/Sidewalk Width Rt:	0.0 ft
(51)Width Curb to Curb:	28.5 ft
(52)Width Out to Out:	29.5 ft
(32)App Roadway Width:	24 ft
(33)Median:	0 No median
(34)Skew:	0°
(35)Structure Flared:	0 No flare
(10)Vertical Clearance:	99.99 ft
(47)Total Horiz Clearance:	28.5 ft
(53)Min Vert Clr Over Deck:	99.99 ft
(54a)Min Vert Underclr Ref:	N Feature not hwy or RR
(54b)Min Vert Underclr:	0.0 ft
(55a)Min Lat Underclr Ref Rt:	N Feature not hwy or RR
(55b)Min Lat Underclr Rt:	0.0 ft
(56)Min Lat Underclr Lt:	0.0 ft

Idaho Transportation Department
Structure Inventory and Appraisal Update

Bridge Key:	28175	Structure Name:	X993230 31.28
(6)Features Intersected:	FARMERS COOP CANAL	(9)Location:	IN EMMETT;W 2ND ST
Xref Structure Name:		Admin Jurisdiction:	4520 City of Emmett

LOAD RATING

(31)Design Load:	5 MS 18 (HS 20)
(64)Operating Rating:	48 tons / HS26.5
(66)Inventory Rating:	36 tons / HS19.8
(70)Posting:	5 At/Above Legal Loads
(41)Posting Status:	A Open, no restriction

CONDITION

(58)Deck:	5 Fair
(59)Superstructure:	4 Poor
(60)Substructure:	5 Fair
(61)Channel/Protection:	6 Bank Slumping
(62)Culvert:	N N/A (NBI)

AGE AND SERVICE

(27)Year Built:	1930		
(106)Year Reconstructed:	1940		
(42a)Type of Service On:	1 Highway		
(42b)Type of Service Under:	5 Waterway		
(28a)Lanes On:	2	(28b)Lanes Under:	0
(29)ADT:	200		
(30)Year of ADT:	2014		
(109)Truck ADT:	10%		
(19)Detour Length:	1 miles		
Speed Limit:	25 MPH		

APPRAISAL

(67)Structure Condition:	4 Minimum Tolerable
(68)Deck Geometry:	6 Equal Min Criteria
(69)Undrclear,Vert and Horiz:	N Not applicable (NBI)
(71)Waterway Adequacy:	9 Above Desirable
(72)Approach Alignment:	8 Equal Desirable Crit
(36)Traffic Safety Features:	
(a)Bridge Rail:	0 Substandard
(b)Transition:	0 Substandard
(c)Approach Rail:	0 Substandard
(d)Approach Rail Ends:	0 Substandard
(113)Scour Critical:	U Unknown Scour

PROPOSED IMPROVEMENTS

(75a)Type of Work:	31 Repl-Load Capacity
(75b)Work Done By:	1 Contract
(76)Length of Improvement:	45 ft
(94)Bridge Improvement Cost:	$312,000
(95)Rdwy Improvement Cost:	$31,000
(96)Total Project Cost:	$468,000
(97)Year of Cost Estimate:	2011
(114)Future ADT:	300
(115)Year of Future ADT:	2034
YEAR PROGRAMMED:	

NAVIGATION DATA

(38)Navigation Control:	Permit Not Required
(39)Vertical Clearance:	
(40)Horizontal Clearance:	
(111)Pier Protection:	
(116)Lift Bridge Vert Clr:	

INSPECTION

(90)Inspection Date: 10/31/2014 (91)Inspection Frequency: 12 months

(92)Supplemental Inspections Frequency: (93)Date of Inspections:

(a)Fracture Critical Detail:	NA	(a)FC Inspection Date:	
(b)Underwater Inspection:	NA	(b)UW Inspection Date:	
(c)Fatique Detail (OS) Inspection:	NA	(c)Fatique Detail (OS) Date:	
(d)UBIT Inspection:	NA	(d)UBIT Date:	
(e)Confined Space Inspection:	NA	(e)Confined Space Date:	

Equipment Needed for Regular Inspection? None

Idaho Transportation Department
Structure Inventory and Appraisal Update

Bridge Key:	28175	Structure Name:	X993230 31.28
(6)Features Intersected:	FARMERS COOP CANAL	(9)Location:	IN EMMETT;W 2ND ST
Xref Structure Name:		Admin Jurisdiction:	4520 City of Emmett

WEARING SURFACE and DEAD LOAD INFORMATION

Asphalt:	0.5 *inches*	**Concrete:**	0.0 *inches*
Granular:	0.0 *inches*	**Timber:**	0.0 *inches*

POSTING INFORMATION

WEIGHT

Load Analysis Date:

Load Analysis Required: N Analysis Complete

	Load Rating Analysis IR (tons)	OR (tons)		Recommended Posting(tons)	Actual Posting(tons)
H Truck	20	27			
HS Truck	36	48			
Type3 (3 axle)	28	37	**Type3 (3 axle)**		
Type 3S2 (5 axle)	40	53	**Type 3S2 (5 axle)**		
Type 3-3 (6 axle)	40	53	**Type 3-3 (6 axle)**		
			Max Axle		

HEIGHT

	Recommended	Actual
Height Posting:		

ACTUAL WIDTH POSTING

Single Lane All Vehicles:	N
Single Lane Trucks/Buses:	N

0.00 ft

Idaho Transportation Department
Bridge Field Inspection Report Photos

Bridge Key:	28175	Date:	10/31/2014
Structure Name:	X993230 31.28	Admin Jurisdiction:	City of Emmett
Features:	FARMERS COOP CANAL	District:	03

Looking East

Looking North

Idaho Transportation Department
Bridge Field Inspection Report Photos

Bridge Key:	28175	Date:	10/31/2014
Structure Name:	X993230 31.28	Admin Jurisdiction:	City of Emmett
Features:	FARMERS COOP CANAL	District:	03

Exposed reinforcing on deck underside

Exposed reinforcing on exterior girder bottom

Idaho Transportation Department
Pontis Field Inspection Report

Bridge Key:	28180	Structure Name:	X993230 31.42
(6)Features Intersected:	FARMERS COOP CANAL	(9)Location:	IN EMMETT;MAIN ST
Xref Structure Name:		Admin Jurisdiction:	4520 City of Emmett
		District:	03

Elm/Env	Element Description	Total Qty	Units	State 1	State 2	State 3	State 4
12/3	**Reinforced Concrete Deck**	1464	sq.ft	922	0	542	0
510/3	***Wearing Surfaces***	1464	*sq.ft*	1464	0	0	0
1120/3	***Efflorescence/Rust Staining***	11	*sq.ft*	11	0	0	0
210/2	**Reinforced Concrete Pier Wall**	56	ft	56	0	0	0

Concrete pier is in satisfactory condition. Skim surface coating is in good condition. South end of pier has 2 inches of undermining of surface coating. Minor surface abrasion below high water mark.

215/2	**Reinforced Concrete Abutment**	140	ft	140	0	0	0

Reinforced concrete abutments are in satisfactory condition. Minor surface abrasion below high water mark. Minor reflective crack at SW corner. Integral wingwalls are in satisfactory condition. Minor cracking.

331/3	**Reinforced Concrete Bridge Railing**	52	ft	5	47	0	0

Cast-in-place concrete bridge rail with painted steel pipe on top is in fair condition. Minor damage to pipe at SE corner. Spalls at NE and SW corners of concrete rail. General surface weathering and deterioration.

Idaho Transportation Department
Pontis Field Inspection Report

Bridge Key:	28180	Structure Name:	X993230 31.42
(6)Features Intersected:	FARMERS COOP CANAL	(9)Location:	IN EMMETT;MAIN ST
Xref Structure Name:		Admin Jurisdiction:	4520 City of Emmett
		District:	03

Additional Condition Information

ROADWAY APPROACHES: Asphalt approaches are in fair condition. Transverse and random 1/8 inch cracking both approaches. Area of patching west approach. Somewhat rough and uneven.

CURBS: Concrete curbs are in fair condition. Hairline vertical cracking and minor collision damage at ends. Paint is peeling.

SIDEWALKS: Concrete sidewalks are in satisfactory condition. Minor cracking and spalling.

EMBANKMENT: Embankments are in good condition.

CHANNEL: Cobble channel is in good condition. No channel cross section required; channel dry at this time.

SIGNS: Standard hazard markers at all 4 corners of the bridge, mounted low.

UTILITIES: Telephone conduit along north edge. Overhead power east.

NOTES: None

WORK ACCOMPLISHED: None

Maintenance Recommendations

Recommendation	Priority	Suggested Work Assignment
Seal curb cracking and repaint.	Low	Local Agency
Maintain approaches and overlay; seal cracking.	Low	Local Agency

Inspector's Signature: _____ 10/31/2013

Inspector Number and Name: 130 - Dave Hughes, Hughes Engineering

Idaho Transportation Department
Structure Inventory and Appraisal Update

Bridge Key:	28180	Structure Name:	X993230 31.42
(6)Features Intersected:	FARMERS COOP CANAL	(9)Location:	IN EMMETT;MAIN ST
Xref Structure Name:		Admin Jurisdiction:	4520 City of Emmett

IDENTIFICATION

(1)State:	16 Idaho
(2)District:	District 3
(3)County:	045 Gem
(4)Place Code:	Emmett
(5)Inventory Route:	140000000
(7)Facility Carried:	MAIN STREET
(11)Milepoint:	004.227
(12)Base Hwy Network:	Not on Base Network
(13a)LRS Inventory Route:	
(13b)LRS Sub Route:	
(16)Latitude:	43° 52' 32"
(17)Longitude:	116° 30' 11"
(98)Border Bridge Code:	
(99)Border Bridge ID:	
Segment Code:	005570
Segment Under Rte:	
Segment Other Rte:	
Drawing Number:	16624
Project Key Number:	
Inspection Area:	932

STRUCTURE TYPE AND MATERIALS

(43a/b)Main Span Material/Design:
1 Concrete 7 Frame

(44a/b)Approach Span Material/Design:

(45)No. of Spans Main Unit:	2
(46)No. of Approach Spans:	0
(107)Deck Type:	1 Concrete-Cast-in-Place
(108a)Wearing Surface:	6 Bituminous
(108b)Membrane:	0 None
(108c)Deck Protection:	None

Sufficiency Rating: 84.6

Deficiency: Not Deficient

CLASSIFICATION

(112)NBIS Length:	Long Enough
(104)Highway System:	0 Not on NHS
(26):Functional Class:	17 Urban Collector
(100)Defense Highway:	0 Not a STRAHNET hwy
(101)Parallel Structure:	No || bridge exists
(102)Direction of Traffic:	2 2-way traffic
(103)Temporary Structure:	
(105)Federal Lands Highway:	0 N/A (NBI)
(110)Design Natl Network:	0 Not part of natl netwo
(20)Toll Facility:	3 On free road
(21)Custodian:	City/Municipal Hwy Agenc
(22)Owner:	City/Municipal Hwy Agenc
(37)Historical Significance:	3 Possibly eligible for

GEOMETRIC DATA

(48)Maximum Span Length:	13.1 ft
(49)Structure Length:	26 ft
Total Length:	26 ft
(50a)Curb/Sidewalk Width Lt:	3.9 ft
(50b)Curb/Sidewalk Width Rt:	3.0 ft
(51)Width Curb to Curb:	49.5 ft
(52)Width Out to Out:	56.4 ft
(32)App Roadway Width:	37 ft
(33)Median:	0 No median
(34)Skew:	0°
(35)Structure Flared:	0 No flare
(10)Vertical Clearance:	99.99 ft
(47)Total Horiz Clearance:	49.5 ft
(53)Min Vert Clr Over Deck:	99.99 ft
(54a)Min Vert Underclr Ref:	N Feature not hwy or RR
(54b)Min Vert Underclr:	0.0 ft
(55a)Min Lat Underclr Ref Rt:	N Feature not hwy or RR
(55b)Min Lat Underclr Rt:	0.0 ft
(56)Min Lat Underclr Lt:	0.0 ft

Idaho Transportation Department
Structure Inventory and Appraisal Update

Bridge Key:	28180	Structure Name:	X993230 31.42
(6)Features Intersected:	FARMERS COOP CANAL	(9)Location:	IN EMMETT;MAIN ST
Xref Structure Name:		Admin Jurisdiction:	4520 City of Emmett

LOAD RATING

(31)Design Load:	5 MS 18 (HS 20)
(64)Operating Rating:	48 tons / HS26.5
(66)Inventory Rating:	36 tons / HS19.8
(70)Posting:	5 At/Above Legal Loads
(41)Posting Status:	A Open, no restriction

CONDITION

(58)Deck:	5 Fair
(59)Superstructure:	5 Fair
(60)Substructure:	6 Satisfactory
(61)Channel/Protection:	6 Bank Slumping
(62)Culvert:	N N/A (NBI)

AGE AND SERVICE

(27)Year Built:	1940		
(106)Year Reconstructed:	1950		
(42a)Type of Service On:	1 Highway		
(42b)Type of Service Under:	5 Waterway		
(28a)Lanes On:	2	(28b)Lanes Under:	0
(29)ADT:	3500		
(30)Year of ADT:	2014		
(109)Truck ADT:	14%		
(19)Detour Length:	1 miles		
Speed Limit:	0 MPH		

APPRAISAL

(67)Structure Condition:	5 Above Min Tolerable
(68)Deck Geometry:	9 Above Desirable Crit
(69)Undrclear,Vert and Horiz:	N Not applicable (NBI)
(71)Waterway Adequacy:	9 Above Desirable
(72)Approach Alignment:	8 Equal Desirable Crit
(36)Traffic Safety Features:	
(a)Bridge Rail:	0 Substandard
(b)Transition:	0 Substandard
(c)Approach Rail:	0 Substandard
(d)Approach Rail Ends:	0 Substandard
(113)Scour Critical:	8 Stable Above Footing

PROPOSED IMPROVEMENTS

(75a)Type of Work:	
(75b)Work Done By:	
(76)Length of Improvement:	
(94)Bridge Improvement Cost:	
(95)Rdwy Improvement Cost:	
(96)Total Project Cost:	
(97)Year of Cost Estimate:	
(114)Future ADT:	5250
(115)Year of Future ADT:	2034
YEAR PROGRAMMED:	

NAVIGATION DATA

(38)Navigation Control:	Permit Not Required
(39)Vertical Clearance:	
(40)Horizontal Clearance:	
(111)Pier Protection:	
(116)Lift Bridge Vert Clr:	

INSPECTION

(90)Inspection Date: 10/31/2013 (91)Inspection Frequency: 24 months

(92)Supplemental Inspections Frequency: (93)Date of Inspections:

(a)Fracture Critical Detail:	NA	(a)FC Inspection Date:	
(b)Underwater Inspection:	NA	(b)UW Inspection Date:	
(c)Fatique Detail (OS) Inspection:	NA	(c)Fatique Detail (OS) Date:	
(d)UBIT Inspection:	NA	(d)UBIT Date:	
(e)Confined Space Inspection:	NA	(e)Confined Space Date:	

Equipment Needed for Regular Inspection? None

Idaho Transportation Department
Structure Inventory and Appraisal Update

Bridge Key:	28180	Structure Name:	X993230 31.42
(6)Features Intersected:	FARMERS COOP CANAL	(9)Location:	IN EMMETT;MAIN ST
Xref Structure Name:		Admin Jurisdiction:	4520 City of Emmett

WEARING SURFACE and DEAD LOAD INFORMATION

Asphalt:	1.5 *inches*	**Concrete:**	0.0 *inches*
Granular:	0.0 *inches*	**Timber:**	0.0 *inches*

POSTING INFORMATION

WEIGHT

Load Analysis Date:

Load Analysis Required: N Analysis Complete

	Load Rating Analysis IR (tons)	OR (tons)		Recommended Posting(tons)	Actual Posting(tons)
H Truck	20	27			
HS Truck	36	48			
Type3 (3 axle)	28	37	**Type3 (3 axle)**		
Type 3S2 (5 axle)	40	53	**Type 3S2 (5 axle)**		
Type 3-3 (6 axle)	40	53	**Type 3-3 (6 axle)**		
			Max Axle		

HEIGHT

	Recommended	Actual
Height Posting:		

ACTUAL WIDTH POSTING

Single Lane All Vehicles:	N
Single Lane Trucks/Buses:	N

0.00 ft

Idaho Transportation Department
Bridge Field Inspection Report Photos

Bridge Key:	28180	Date:	10/31/2013
Structure Name:	X993230 31.42	Admin Jurisdiction:	City of Emmett
Features:	FARMERS COOP CANAL	District:	03

Looking East

Looking North

Idaho Transportation Department
Bridge Field Inspection Report Photos

Bridge Key:	28180	Date:	10/31/2013
Structure Name:	X993230 31.42	Admin Jurisdiction:	City of Emmett
Features:	FARMERS COOP CANAL	District:	03

Underside view of staining and efflorescence

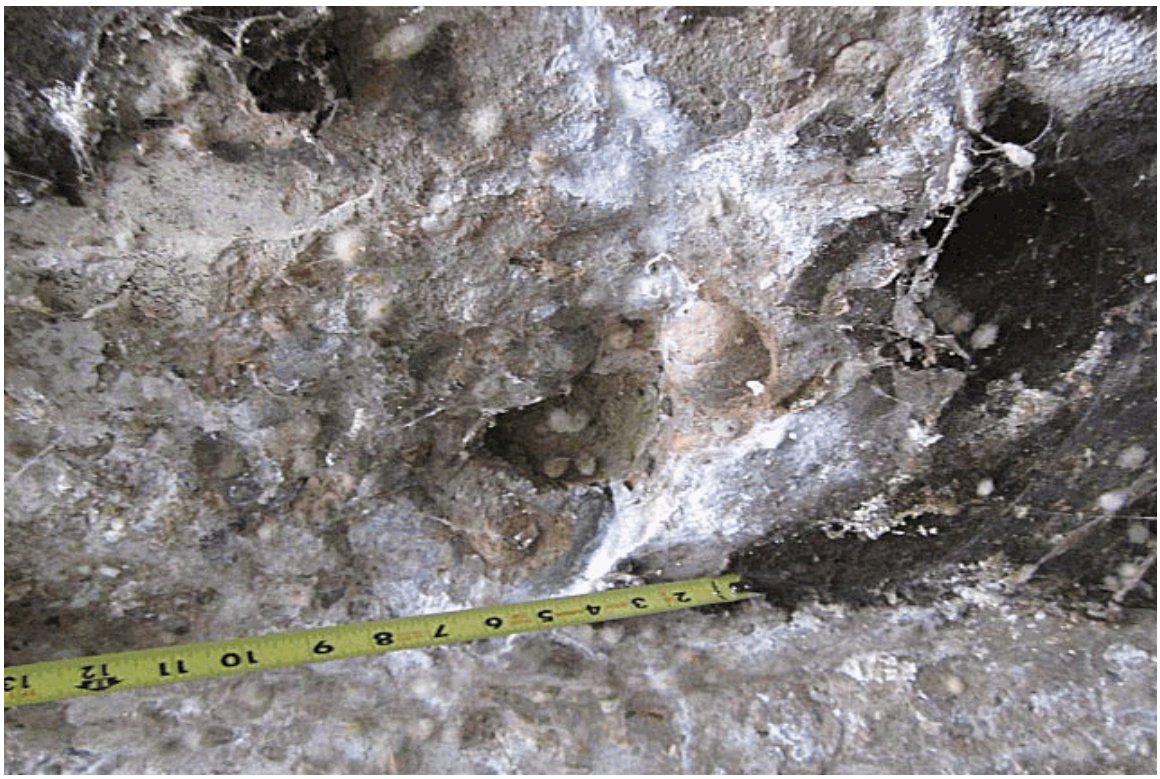

Close-up of 4 inch diameter hole 2-1/2 inches deep slab underside

THIS PAGE INTENTIONALLY LEFT BLANK

Appendix D

ADA Curb Ramp Transition Plan

THIS PAGE INTENTIONALLY LEFT BLANK

KELLER associates

Project # 210022-016

CITY OF EMMETT

ADA Transition Plan 2015

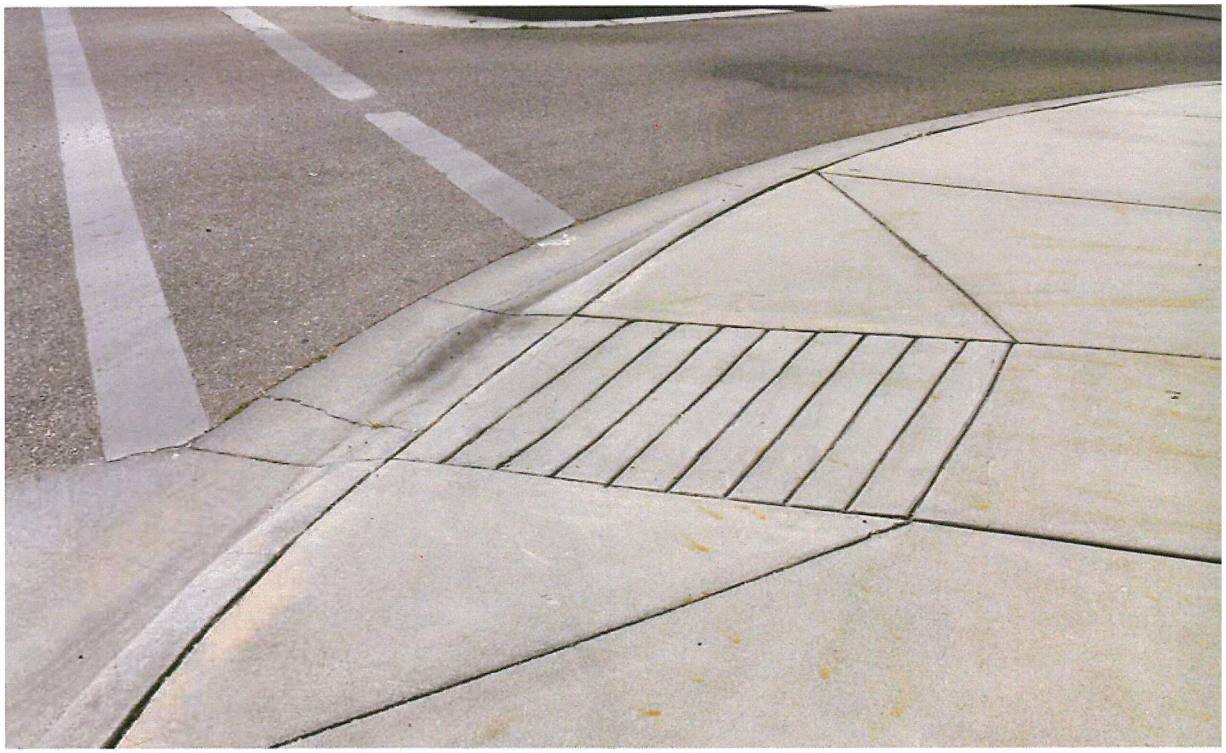

PROFESSIONAL ENGINEER
REGISTERED
7/2/15
12524
STATE OF IDAHO
JUSTIN WALKER

THIS PAGE INTENTIONALLY LEFT BLANK

Table of Contents

1.1 Background **1**

1.2 Self-Evaluation **1**

1.3 Correction Program **2**

1.4 Prioritization **3**

1.4.1 Location and Demand Score 4

1.4.2 Compliance Score 6

1.4.3 Composite Score 6

1.5 Scheduled Improvements **7**

Appendices

Appendix A – Summary Table
Appendix B – Existing Ramp Inventory
Appendix C – No Ramp Locations Inventory
Appendix D – ITD Standard Drawings
Appendix E – ISPWC Standard Drawings
Appendix F – ITD ADA Curb Ramp Program Application

List of Tables

Table 1 - Pedestrian Ramp Inventory 2
Table 2 - Estimated Ramp Improvement Costs 3
Table 3 - Location Type and Points 5
Table 4 - Components Measured for Compliance Evaluation 6
Table 5 - Priority Category Point Ranges 7

List of Pictures

Picture 1 - ADA Ramps in Emmett 1
Picture 2 - Missing Ramp 3
Picture 3 - Pedestrian Ramps near the First Baptist Church 4
Picture 4 - Pedestrian Ramps near Post Office 5
Picture 5 - Pedestrian Crossing near Gem County Courthouse 7

THIS PAGE INTENTIONALLY LEFT BLANK

1.1 Background

Keller Associates is working with the City of Emmett to prepare a transition plan that meets the requirements of the 2010 Americans with Disabilities Act Accessibility Guidelines (ADAAG). The plan also follows guidance from the 2011 Public Rights-of-Way Accessibility Guidelines (PROWAG). These documents were used in evaluating the conditions of existing pedestrian ramps. Locations where there are no pedestrian ramps are evaluated on their proximity to public facilities. The locations are also checked to confirm if curb and sidewalk exist. The PROWAG is a document that establishes the guidelines for accessibility in the public rights-of-way. It has not been formally adopted, but contains guidance on pedestrian ramps that is expected to be mandated in the future.

Title II of the Americans with Disabilities Act (ADA) prohibits state and local governments from excluding participation in or denying benefits of programs, services, or activities to people with disabilities. Under the ADA, designing and constructed public facilities that are not accessible by people with disabilities constitutes discrimination.

Picture 1 - ADA Ramps in Emmett

The ADA requires public entities with 50 or more employees to perform a self-evaluation to determine barriers to accessibility, and develop plans to comply with ADA requirements. The City of Emmett has more than 50 employees. This report assists the City of Emmett to satisfy the Transition Plan requirement of 28 CFR Section 35.150, Existing Facilities, as it applies to curb ramps.

1.2 Self-Evaluation

Keller Associates personnel conducted field investigations to generate a list of all existing pedestrian ramps. The existing ramps have been evaluated in comparison to current ADA requirements and deficiencies were noted using the Idaho Transportation Department's (ITD) ADA Ramp Inspection Form in May and June of 2014. The findings of the investigation are found in Appendix B.

Some ramps meet ADA requirements; however, a majority of the ramps have one or more deficiencies. Deficiencies include missing detectable warning surfaces (truncated domes), excessive ramp slope and/or cross slope, non-compliant landings, and others. Some of these deficiencies can be corrected fairly easily, while others require reconstruction. Monetary costs for mitigating the ramps have been estimated.

Using a sidewalk inventory conducted by Keller Associates and GIS software including aerial photography, locations where there are no pedestrian ramps were identified as illustrated in Picture 2 (coded as NR). The locations where pedestrian ramps are missing usually exist at vertical curbs with no sloped surface to the lower street elevation. Some of the locations do not have curb and gutter between the street and sidewalk, and some locations do not have sidewalk. Where no sidewalk exists (coded as

NS) the need for a ramp is not considered immediate because it would not bridge a gap in an accessible ADA route. These locations would require more extensive work than simply adding a ramp. This work would require the addition of sidewalk at a minimum, but could be more complex and require the acquisition of additional right-of-way, reconstructing approaches, tree removal, irrigation relocation, and other elements that are above and beyond the scope of this study. Where curb is missing (coded as NC), the sidewalk should extend to the street and truncated domes should be added. Costs for these additions are estimated. Data from the investigation includes the NS and NC codes with the missing ramp data and can be found in Appendix B. Table 1 below summarizes the inventory findings.

Table 1 - Pedestrian Ramp Inventory

Item	Number
Existing Compliant Ramps	8
Existing Non-Compliant Ramps	512
Locations with Sidewalk and Curb that are Missing Ramps (NR)	93
Locations with Sidewalk and No Curb (NRNC)	22
Locations with No Sidewalk (NRNS)	69
Locations with No Sidewalk and No Curb (NSNC)	106

1.3 Correction Program

It is recommended by this transition plan that the City of Emmett allocates a certain annual budget for correcting deficient pedestrian ramps. This budget number would be used by the City, along with the ramp lists, to determine which ramps are reconstructed each year. For any road improvement projects that are beyond normal maintenance activities, the ADA requires that pedestrian ramps be brought up to standard. New construction must include ADA compliant pedestrian ramps. To better define what type of road work triggers ADA compliance, the U.S. Department of Justice provided technical guidance which is summarized below.

Maintenance (no upgrade required)

- Chip Seals
- Crack Filling and Sealing
- Diamond Grinding
- Down Bar Retrofit
- Fog Seals
- Joint Crack Seals
- Joint Repairs
- Pavement Patching
- Scrub Sealing
- Slurry Seals
- Spot High-Friction Treatments
- Surface Sealing

Alteration (upgrade required)

- Addition of new layers of asphalt
- Cape seals
- Hot in-place Recycling
- Microsurfacing / Thin-lift Overlay
- Mill & Fill / Mill & Overlay
- New Construction
- Open-graded surface course
- Rehabilitation and Reconstruction

When creating plans for ADA compliant ramps, the Idaho Transportation Department (ITD) standard drawings and the Idaho Standards for Public Works Construction (ISPWC) standard drawings may be utilized. The latest ISPWC and ITD drawings are attached in Appendices D and E. For retrofit projects it is difficult to use one drawing exclusively and have it meet all of the elements that a ramp must comply with. For these situations, additional ramp drawings may be required.

Table 2 below shows the estimated costs associated with the removal of deficient ramps, addition of new ramps (including truncated domes) and retrofitting existing ramps with truncated domes. The table also has a row for typical costs associated with replacing or modifying a section of curb in front of an otherwise compliant ramp. More detailed costs should be evaluated for each individual ramp. This data was used to generate the costs in the Summary Table in Appendix A.

Table 2 - Estimated Ramp Improvement Costs

Item	Cost
Add New Curb Ramp	$1,500
Remove Existing Curb Ramp (assumes very little saw-cutting)	$100
Retrofit Truncated Domes	$750
Modify Curb and Gutter	$375

These estimated costs assume a single ramp; if a corner has bi-directional ramps, then the cost for that corner would double or more depending on the pad between the ramps. Each ramped area was inventoried as a separate ramp and assigned its own unique ID number; a corner with bi-direction ramps was inventoried as two ramps. The cost estimate for removal of an existing ramp assumes minimal saw-cutting.

1.4 Prioritization

The City of Emmett personnel responsible for implementing the transition plan will decide which pedestrian ramps will be upgraded each year. The City will use lists generated in this report to assist in the prioritization and budgeting process. The lists are prioritized based on a point system assigned for a ramp's proximity to public facilities as well as level of compliance.

Picture 2 - Missing Ramp

Higher priority should be given to those locations where no ramps exist, followed by existing ramps that are the most out of compliance. The City will ultimately decide each year which of these and other factors will determine the ramps that will be improved.

The Pedestrian Ramp Improvement Summary Sheet in Appendix A outlines how long it will take to fix or replace deficient ramps based on the amount of money the City is able to allocate each year. There are three tables shown.

The first table is for locations with no pedestrian ramps (excluding those on Washington Avenue/SH-52), which should be given the highest priority. The second table is for deficient ramps from the existing ramp list. This list will be the second priority; however, the City may decide to reconstruct some of these ramps with high location points before adding ramps from the "No Existing Pedestrian Ramp List" with low location point values.

The third table includes deficient ramps on Highway 52 identified in the 2012 ITD ADA Transition Plan. Locations on Highway 52 where no ramps exist are not included in this report. Again, these ramps should be upgraded by ITD as improvements are made on Highway 52. ITD has an ADA ramp program to fund replacement of deficient ramps on state highways such as Highway 52. The goal of the program is to provide accessible facilities for pedestrians with disabilities while allowing local jurisdiction flexibility in meeting the required standards. ITD allocates $500,000 of state funds annually for this program. Applicants can qualify for up to $60,000 to construct new or alter existing curb ramps on the state highway system to meet the requirements of the ADA. Funds can only be used for construction purposes. Projects are required to be completed within one year from the execution of a Cooperative Agreement. More information can be found on ITD's Bicycle and Pedestrian webpage at www.itd.idaho.gov/bike_ped. Though the 2016 application period is closed, a copy of the application is provided for reference in Appendix F.

1.4.1 Location and Demand Score

Location and demand prioritization is based on a scoring system that was taken from the Idaho Transportation Department's *ITD Transition Plan for Pedestrian Curb Ramps*, dated January 2012. A GIS database was created for each type of location so a spatial analysis could be performed to evaluate which ramps have the highest demand.

- Places of public accommodation included hospitals and medical clinics, nursing homes, schools, fairgrounds, museums, senior centers, and community centers
- Government offices and facilities include post offices, city hall, courthouses, police departments, fire stations, and libraries

Picture 3 - Pedestrian Ramps near the First Baptist Church

- Employer includes major employment nodes in Emmett. This category was limited to Albertsons – other major employers fit into one of the above categories

ITD also had a Public Transit Facility category that would include bus stops and related locations; there is no public transit in Emmett and this category was not utilized in this study.

GIS shapefiles were created for each dataset. A curb ramp location received points for each type of facility located within a half a mile of the curb ramp location. The more types of public locations in the vicinity of a curb ramp indicate a higher demand and resulted in a higher score. Table 3 summarizes the location scoring system. Also, the closer a location type is to a ramp the higher the value.

Table 3 - Location Type and Points

Location Type	Points Assigned for 0 to 0.25 Miles From Ramp	Points Assigned for 0.25 to 0.5 Miles From Ramp
Public Accommodation	4	2
Government Offices and Facilities	3	1.5
Major Employers	1	0.5

Picture 4 - Pedestrian Ramps near Post Office

1.4.2 Compliance Score

Curb ramps were evaluated based on the number of components out of compliance, and one point was given for each component out of compliance. If there is no curb ramp at a location, all components would be considered out of compliance and that location would receive the highest score (17). Components that pertain to the compliance of a curb ramp are shown in Table 4 on page 6.

Table 4 - Components Measured for Compliance Evaluation

Component	ADA Requirement
Ramp	
Ramp Width	48 inches minimum
Running Slope	8.3% maximum
Cross Slope	2.0% maximum
Flare Slope A	10.0% maximum
Flare Slope B	10.0% maximum
Discontinuities	No discontinuities
Landing	
Landing Size	4.0 ft by 4.0 ft minimum
Maximum Slope	2.0% maximum
Detectable Warning/Truncated Domes	
Depth	24 inches minimum in the direction of travel
Width	Must extend the full width of the curb cut
Distance to Curb Line	Within 8 inches of the curb line
Color Contrast	Contrast visually with surrounding area
Dome Dimensions	Base diameter of 0.9 in. minimum to 1.4 in. maximum; top diameter of 50% of base diameter minimum to 65% of base diameter maximum; height of 0.2 in.; center to center spacing 1.6 in. minimum to 2.4 in. maximum; base to base spacing of 0.65 in. minimum
Transition	
Lip	No surface discontinuities > 1/4 inch
Gutter Counter Slope	5.0% maximum
Gutter Flowline Slope	2.0 % minimum
Clear Space	4.0 ft by 4.0 ft minimum clear space within crosswalk

1.4.3 Composite Score

The location/demand score and compliance score were summed to get a composite score. The composite score of ramps with no deficiencies was changed to zero. Composite scores ranged from 0 to 25. The curb ramp locations were ranked and assigned a priority of high, medium or low based on the composite score, with the highest scores as highest priority. The priority categories are divided such

that all locations with no ramps fall into the high priority category. The composite score ranges and the corresponding number of ramps are shown in Table 5.

Table 5 - Priority Category Point Ranges

Category	Composite Score Range	Number of Ramps
High	15.5 – 25.0	373
Medium	10.0 - 15.0	254
Low	0.5 - 9.5	95
Compliant	0	8

1.5 Scheduled Improvements

At the time of this report (2015), major improvements on Johns Avenue between 4th and 12th Streets were in the conceptual design stages; construction is anticipated in 2020. ADA curb ramps in this corridor will be reconstructed to ADA standards as part of the project. Additionally the City recently applied for a $60,000 grant through the ITD ADA ramp program mentioned in Section 1.4 to make improvements to ramps on State Highways 16 and 52 inside city limits. The city is waiting to hear if they will be funded.

Picture 5 - Pedestrian Crossing near Gem County Courthouse

THIS PAGE INTENTIONALLY LEFT BLANK

Appendix A
Pedestrian Ramp Summary Table

THIS PAGE INTENTIONALLY LEFT BLANK

Missing Ramps (All High Priority)									
Composite Score	Number of Ramps	Costs	Years to Fix with the Following Annual Budgets						
			$ 5,000	$ 10,000	$ 15,000	$ 20,000	$ 25,000	$ 30,000
24 to 25	185	$ 277,500	55.5	27.8	18.5	13.9	11.1	9.3
22 to 23.5	64	$ 96,000	19.2	9.6	6.4	4.8	3.8	3.2
17 to 21.5	41	$ 61,500	12.3	6.2	4.1	3.1	2.5	2.1
	Total:	**$ 435,000**	**87**	**44**	**29**	**22**	**17**	**15**

Existing Deficient Ramps									
Priority	Composite Score	Number	Costs	Years to Fix With the Following Annual Budgets					
				$ 5,000	$ 10,000	$ 15,000	$ 20,000	$ 25,000	$ 30,000
High	15.5 to 25.0	163	$ 317,050	63.4	31.7	21.1	15.9	12.7	10.6
Medium	10 to 15.0	254	$ 458,200	91.6	45.8	30.5	22.9	18.3	15.3
Low	0 to 9.5	95	$ 128,700	25.7	12.9	8.6	6.4	5.1	4.3
	Total:	**512**	**$ 903,950.00**	**180.8**	**90.4**	**60.3**	**45.2**	**36.2**	**30.1**

Ramps on Hwy 52	
ITD Priority	Ramps
High	22
Medium	18
Low	6
Compliant	17

THIS PAGE INTENTIONALLY LEFT BLANK

Appendix B
Existing Ramp Inventory

THIS PAGE INTENTIONALLY LEFT BLANK

Not Compliant With:	
	ADAAG
	PROWAG
	BOTH

Priority	Number	Costs
High	163	$ 317,050
Medium	254	$ 458,200
Low	95	$ 128,700
Compliant	8	$ -
Total:	**520**	**$ 903,950**

	Location Details						Ramp							Landing				Transition Details						Detectable Warning Surfaces							Priority Score						Correction Costs						
GIS ID	Inspection Date	Crossing Description	Location	Priority	Sidewalk	Curb & Gutter	Ramp Direction	Ramp Width (in)	Running Slope (%)	Cross Slope (%)	Flare Slope A (%)	Flare Slope B (%)	Discontinuities	Landing Provided	Landing Width (in)	Landing Depth (in)	Maximum Slope (%)	Lip Present	Gutter Counter Slope (%)	Gutter Flowline Slope at Ramp (%)	Traffic Control	Marked X-Walk	X-Walk Clear Space	Domes	Depth (in)	Spans Curb Cut	Within 8 inches of Curb Line	Color	Color Contrast	Dome Dimensions are Correct	Number ADAAG	Number PROWAG	Number BOTH	Total Compliance Score	Location Score	**Composite Score**	Cost Add Domes	Cost Remove Existing	Add New Ramp	Modify Curb & Gutter	**Total Cost**	Comment
142	6/3/2014	S COMMERCIAL AVE & 6TH ST	NE	High	YES	YES	N/S	36	13.2	N/A	27.8	28.1	NO	YES	60	58	2.3	YES	5.9	2.5	NONE	NO	YES	No	N/A	N/A	N/A	N/A	N/A	N/A	0	3	6	9	16	**25**	$ -	$ 100	$ 1,500	$ 375	**$ 1,975**	
455	6/13/2014	E PARK ST & N HAYES AVE	SE	High	YES	YES	E/W	35	13.1	N/A	12.6	14.5	YES	YES	48	48	3.1	NO	12.1	3	STOP	YES	YES	No	N/A	N/A	N/A	N/A	N/A	N/A	0	1	8	9	16	**25**	$ -	$ 100	$ 1,500	$ 375	**$ 1,975**	
446	6/13/2014	E PHILLIPS ST & N MOFFATT AVE	NE	High	YES	YES	N/S	26	7.7	3.1	16.4	16.5	NO	NO	N/A	N/A	N/A	YES	13.2	2.8	NONE	NO	YES	No	N/A	N/A	N/A	N/A	N/A	N/A	0	2	7	9	14.5	**23.5**	$ -	$ 100	$ 1,500	$ 375	**$ 1,975**	
79	5/30/2014	N BOISE AVE & MUSSER ST	NW	High	YES	YES	N/S	63	9.8	2.3	22.6	20.4	YES	YES	63	48	4.2	NO	5.2	1.2	STOP	NO	YES	No	N/A	N/A	N/A	N/A	N/A	N/A	0	0	8	8	15	**23**	$ -	$ 100	$ 1,500	$ 375	**$ 1,975**	
145	6/3/2014	S COMMERCIAL AVE & W 5TH ST	SW	High	YES	YES	N/S	46	6.6	N/A	22.7	30	YES	YES	58	54	2.8	NO	5.7	2.1	NONE	NO	YES	No	N/A	N/A	N/A	N/A	N/A	N/A	0	2	6	8	15	**23**	$ -	$ 100	$ 1,500	$ 375	**$ 1,975**	
302	6/10/2014	E 2ND ST & S PINE AVE	NW	High	YES	YES	N/S	44	11.9	N/A	12.4	18.6	YES	NO	N/A	N/A	N/A	NO	12.5	0.1	STOP	YES	YES	No	N/A	N/A	N/A	N/A	N/A	N/A	0	1	7	8	15	**23**	$ -	$ 100	$ 1,500	$ 375	**$ 1,975**	
325	6/10/2014	E 4TH ST & HAZEL AVE	SE	High	YES	YES	N/S	56	9.8	2.1	12	14.1	NO	NO	N/A	N/A	N/A	YES	8.1	1.8	STOP	YES	YES	No	N/A	N/A	N/A	N/A	N/A	N/A	0	1	7	8	15	**23**	$ -	$ 100	$ 1,500	$ 375	**$ 1,975**	Crosswalk not in line with ramp
461	6/16/2014	E MAIN ST & S PINE AVE	SE	High	YES	YES	N/S	44	11.7	N/A	16.5	21.6	NO	NO	N/A	N/A	N/A	YES	9.7	0.1	STOP	YES	YES	No	N/A	N/A	N/A	N/A	N/A	N/A	0	2	6	8	15	**23**	$ -	$ 100	$ 1,500	$ 375	**$ 1,975**	
463	6/16/2014	E MAIN ST & N PINE AVE	NE	High	YES	YES	E/W	44	9.6	N/A	13	13.9	NO	NO	N/A	N/A	N/A	YES	12.9	1.8	STOP	NO	YES	No	N/A	N/A	N/A	N/A	N/A	N/A	0	2	6	8	15	**23**	$ -	$ 100	$ 1,500	$ 375	**$ 1,975**	
445	6/13/2014	E PARK ST & N MOFFAT AVE	SE	High	YES	YES	N/S	46	10.9	2.5	8.2	15.4	NO	NO	N/A	N/A	N/A	YES	19.2	0.8	NONE	NO	YES	No	N/A	N/A	N/A	N/A	N/A	N/A	0	2	6	8	13.5	**21.5**	$ -	$ 100	$ 1,500	$ 375	**$ 1,975**	
85	5/30/2014	RIVERSIDE ST & MONROE ST	SE	High	YES	YES	E/W	45	11.9	0.3	13.7	16.6	NO	NO	N/A	N/A	N/A	NO	6.8	1.1	NONE	NO	YES	No	N/A	N/A	N/A	N/A	N/A	N/A	0	1	6	7	14	**21**	$ -	$ 100	$ 1,500	$ 375	**$ 1,975**	
122	6/2/2014	MURRAY AVE & W MAIN ST	SW	High	YES	YES	E/W	36	11.2	2.4	5.2	8.4	YES	YES	47	60	6	NO	1	0.8	STOP	NO	YES	No	N/A	N/A	N/A	N/A	N/A	N/A	0	2	5	7	14	**21**	$ -	$ 100	$ 1,500	$ -	**$ 1,600**	
198	6/5/2014	S HAYES AVE & E 1ST ST	SE	High	YES	YES	E/W	55	11.6	0.1	23.4	22.4	NO	YES	61	59	2.6	YES	7.2	0.6	STOP	YES	YES	No	N/A	N/A	N/A	N/A	N/A	N/A	0	1	6	7	14	**21**	$ -	$ 100	$ 1,500	$ 375	**$ 1,975**	
218	6/5/2014	E 1ST ST & S HAWTHORNE AVE	SE	High	YES	YES	E/W	42	9.8	N/A	44.5	36.4	NO	YES	57	58	1	NO	10.8	2.3	STOP	YES	YES	No	N/A	N/A	N/A	N/A	N/A	N/A	0	2	5	7	14	**21**	$ -	$ 100	$ 1,500	$ 375	**$ 1,975**	
256	6/6/2014	S JOHNS AVE & E 2ND ST	NW	High	YES	YES	E/W	57	8.6	4	N/A	N/A	NO	YES	59	59	2.1	YES	15.8	2.3	STOP	YES	YES	No	N/A	N/A	N/A	N/A	N/A	N/A	0	2	5	7	14	**21**	$ -	$ 100	$ 1,500	$ 375	**$ 1,975**	
263	6/9/2014	E 2ND ST & S MCKINLEY AVE	SW	High	YES	YES	E/W	40	9.7	N/A	19.5	21.6	YES	YES	60	60	1.7	NO	13.2	0.7	STOP	YES	YES	No	N/A	N/A	N/A	N/A	N/A	N/A	0	1	6	7	14	**21**	$ -	$ 100	$ 1,500	$ 375	**$ 1,975**	
264	6/9/2014	E 2ND ST & S MCKINLEY AVE	SE	High	YES	YES	E/W	42	3.1	2.1	N/A	N/A	YES	YES	59	48	3.5	YES	0.1	3.7	STOP	YES	YES	No	N/A	N/A	N/A	N/A	N/A	N/A	0	3	4	7	14	**21**	$ -	$ 100	$ 1,500	$ 375	**$ 1,975**	
300	6/10/2014	E 1ST ST & S PINE AVE	SW	High	YES	YES	N/S	55	11.3	0.6	20.4	15.2	NO	NO	N/A	N/A	N/A	YES	5.2	0.1	STOP	YES	YES	No	N/A	N/A	N/A	N/A	N/A	N/A	0	1	6	7	14	**21**	$ -	$ 100	$ 1,500	$ 375	**$ 1,975**	
301	6/10/2014	S PINE AVE & VISTA DR	NE	High	YES	YES	N/S	56	7.5	2.1	19.3	15.7	NO	NO	N/A	N/A	N/A	YES	4.1	2.5	STOP	YES	YES	No	N/A	N/A	N/A	N/A	N/A	N/A	0	2	5	7	14	**21**	$ -	$ 100	$ 1,500	$ 375	**$ 1,975**	
304	6/10/2014	E 2ND ST & S BUTTE AVE	NW	High	YES	YES	N/S	42	8.8	N/A	18.1	16.2	NO	YES	60	84		YES	15.2	1.7	NONE	NO	YES	No	N/A	N/A	N/A	N/A	N/A	N/A	0	2	5	7	14	**21**	$ -	$ 100	$ 1,500	$ 375	**$ 1,975**	
307	6/10/2014	E 2ND ST & S MOFFAT AVE	NE	High	YES	YES	N/S	43	7.8	2.2	9.7	12.5	NO	NO	N/A	N/A	N/A	YES	6.1	0.2	NONE	NO	YES	No	N/A	N/A	N/A	N/A	N/A	N/A	0	2	5	7	14	**21**	$ -	$ 100	$ 1,500	$ 375	**$ 1,975**	
324	6/10/2014	E 4TH ST & S DECLARK AVE	SW	High	YES	YES	E/W	54	12.2	1.5	24.3	14.6	NO	NO	N/A	N/A	N/A	YES	7.9	3.3	STOP	NO	YES	No	N/A	N/A	N/A	N/A	N/A	N/A	0	2	6	8	13	**21**	$ -	$ 100	$ 1,500	$ 375	**$ 1,975**	
328	6/10/2014	E 4TH ST & HAZEL AVE	SW	High	YES	YES	N/S	52	11.1	1.9	16.5	16.6	NO	NO	N/A	N/A	N/A	YES	10.2	1.6	STOP	NO	YES	No	N/A	N/A	N/A	N/A	N/A	N/A	0	1	6	7	14	**21**	$ -	$ 100	$ 1,500	$ 375	**$ 1,975**	
438	6/13/2014	N PINE AVE & E PHILLIPS ST	SE	High	YES	YES	N/S	52	11.2	N/A	17.9	18.4	YES	NO	N/A	N/A	N/A	YES	3	1.6	STOP	NO	YES	No	N/A	N/A	N/A	N/A	N/A	N/A	0	1	6	7	14	**21**	$ -	$ 100	$ 1,500	$ 375	**$ 1,975**	
489	6/16/2014	E MAIN ST & N MCKINLEY AVE	NE	High	YES	YES	E/W	60	16.8	1.8	17.4	19.1	YES	YES	60	76	2.5	NO	11	1	STOP	YES	YES	No	N/A	N/A	N/A	N/A	N/A	N/A	0	0	7	7	14	**21**	$ -	$ 100	$ 1,500	$ 375	**$ 1,975**	
238	6/6/2014	S JOHNS AVE & E 7TH ST	SE	High	YES	YES	E/W	56	9	5.2	N/A	N/A	YES	YES	56	60	4.2	YES	9.8	3.8	STOP	NO	YES	No	N/A	N/A	N/A	N/A	N/A	N/A	0	2	5	7	13	**20**	$ -	$ 100	$ 1,500	$ 375	**$ 1,975**	
298	6/9/2014	S CONSTITUTION LN & E 12TH ST	SE	High	YES	YES	E/W	46	5.2	1.2	6.9	3.2	NO	YES	44	47	2.1	NO	8.7	0.6	STOP	YES	YES	No	N/A	N/A	N/A	N/A	N/A	N/A	0	3	3	6	14	**20**	$ -	$ 100	$ 1,500	$ 375	**$ 1,975**	
422	6/12/2014	E 12TH ST & CRYSTAL CREEK DR	NW	High	YES	YES	E/W	44	7.3	3.8	9.7	2.3	NO	YES	44	35	3.7	NO	10.5	3.22	STOP	NO	YES	No	N/A	N/A	N/A	N/A	N/A	N/A	0	3	5	8	12	**20**	$ -	$ 100	$ 1,500	$ 375	**$ 1,975**	
15	5/28/2014	COMMANCHE & CHEROKEE	SW	High	YES	YES	N/S	42	4.3	1.6	8.6	5.4	YES	YES	42	35	N/A	YES	N/A	2.1	STOP	NO	YES	No	N/A	N/A	N/A	N/A	N/A	N/A	0	4	3	7	12.5	**19.5**	$ -	$ 100	$ 1,500	$ 375	**$ 1,975**	
98	6/2/2014	E LOCUST ST & N BUTTE AVE	NE	High	YES	YES	N/S	48	12.3	0.6	14.2	11.5	NO	NO	N/A	N/A	N/A	YES	9.3	0.2	STOP	YES	YES	No	N/A	N/A	N/A	N/A	N/A	N/A	0	1	6	7	12.5	**19.5**	$ -	$ 100	$ 1,500	$ 375	**$ 1,975**	
103	6/2/2014	E LOCUST ST & RIGGS ST	NW	High	YES	YES	E/W	52	12	1.7	11.8	10.1	YES	NO	N/A	N/A	N/A	NO	10.4	1.3	STOP	NO	YES	No	N/A	N/A	N/A	N/A	N/A	N/A	0	0	7	7	12.5	**19.5**	$ -	$ 100	$ 1,500	$ 375	**$ 1,975**	
104	6/2/2014	E LOCUST ST & RIGGS ST	NE	High	YES	YES	E/W	56	9.7	0.6	14.6	13.5	YES	NO	N/A	N/A	N/A	NO	19.8	1.4	STOP	NO	YES	No	N/A	N/A	N/A	N/A	N/A	N/A	0	0	7	7	12.5	**19.5**	$ -	$ 100	$ 1,500	$ 375	**$ 1,975**	
235	6/6/2014	S JOHNS AVE & EMMETT SERENITY LIVING LOT	SW	High	YES	YES	N/S	70	6.3	3.3	8.5	4.8	YES	YES	70	50	2.8	NO	5.7	2.8	NONE	NO	YES	No	N/A	N/A	N/A	N/A	N/A	N/A	0	1	5	6	13.5	**19.5**	$ -	$ 100	$ 1,500	$ 375	**$ 1,975**	
439	6/13/2014	N PINE AVE & E PHILLIPS ST	NE	High	YES	YES	N/S	48	7.5	0.6	20.1	12.3	NO	NO	N/A	N/A	N/A	YES	9.3	2.3	STOP	NO	YES	No	N/A	N/A	N/A	N/A	N/A	N/A	0	2	5	7	12.5	**19.5**	$ -	$ 100	$ 1,500	$ 375	**$ 1,975**	
51	5/29/2014	CARSON ST & N COMMERCIAL AVE	NW	High	YES	YES	N/S	52	10.1	0.6	28.9	23.2	YES	YES	58	64	3.9	NO	5.5	1.3	STOP	NO	YES	No	N/A	N/A	N/A	N/A	N/A	N/A	0	0	7	7	12	**19**	$ -	$ 100	$ 1,500	$ 375	**$ 1,975**	
53	5/29/2014	CARSON ST & N COMMERCIAL AVE	SE	High	YES	YES	N/S	42	8.1	0.9	27.8	23.6	YES	NO	N/A	N/A	N/A	NO	4.6	2.5	STOP	NO	YES	No	N/A	N/A	N/A	N/A	N/A	N/A	0	2	5	7	12	**19**	$ -	$ 100	$ 1,500	$ 375	**$ 1,975**	
66	5/29/2014	DION ST & N COMMERCIAL ST	NW	High	YES	YES	E/W	56	8.8	0.1	16.5	15.2	NO	YES	56	62	4.1	NO	8.9	0.4	NONE	NO	YES	No	N/A	N/A	N/A	N/A	N/A	N/A	0	0	6	6	13	**19**	$ -	$ 100	$ 1,500	$ 375	**$ 1,975**	
67	5/29/2014	DION ST & N COMMERCIAL ST	NW	High	YES	YES	N/S	60	13.2	2.2	20.2	12.7	NO	YES	62	56	4.1	NO	4.8	0.1	NONE	NO	YES	No	N/A	N/A	N/A	N/A	N/A	N/A	0	0	6	6	13	**19**	$ -	$ 100	$ 1,500	$ -	**$ 1,600**	
88	5/30/2014	E PARK ST & N WARDWELL AVE	SE	High	YES	YES	E/W	46	9	0.9	10.1	12.4	NO	YES	56	78	0.9	YES	N/A	1.2	STOP	YES	YES	No	N/A	N/A	N/A	N/A	N/A	N/A	0	2	4	6	13	**19**	$ -	$ 100	$ 1,500	$ 375	**$ 1,975**	Lip prevents accurate gutter counter slope measurement
89	5/30/2014	S JOHNS AVE & E LOCUST (N OF RXR)	NW	High	YES	YES	N/S	49	8.8	0.4	19.7	16.5	NO	NO	N/A	N/A	N/A	YES	N/A	0.9	NONE	NO	YES	No	N/A	N/A	N/A	N/A	N/A	N/A	0	1	5	6	13	**19**	$ -	$ 100	$ 1,500	$ 375	**$ 1,975**	Sidewalk ends after landing
91	5/30/2014	E PARK ST & N MCKINLEY AVE	NW	High	YES	YES	N/S	36	5.7	3	2.4	7.4	NO	YES	60	64	3.8	NO	8.8	2.5	STOP	YES	YES	No	N/A	N/A	N/A	N/A	N/A	N/A	0	2	4	6	13	**19**	$ -	$ 100	$ 1,500	$ 375	**$ 1,975**	
93	5/30/2014	E PARK ST & N MCKINLEY AVE	NE	High	YES	YES	E/W	36	9	1	7.9	6.4	NO	YES	60	48	9.5	YES	8.3	1	STOP	YES	YES	No	N/A	N/A	N/A	N/A	N/A	N/A	0	2	4	6	13	**19**	$ -	$ 100	$ 1,500	$ 375	**$ 1,975**	
126	6/3/2014	S BOISE AVE & W 12TH ST	SE	High	YES	YES	E/W	51	4.1	2.5	5.1	8.6	YES	YES	51	22	2.6	NO	10.8	0.6	STOP	YES	YES	No	N/A	N/A	N/A	N/A	N/A	N/A	0	0	6	6	13	**19**	$ -	$ 100	$ 1,500	$ 375	**$ 1,975**	
130	6/3/2014	S BOISE AVE & W 4TH ST	SE	High	YES	YES	E/W	61	10.2	1.8	14.9	11	NO	NO	N/A	N/A	N/A	NO	3.7	2.2	STOP	NO	YES	No	N/A	N/A	N/A	N/A	N/A	N/A	0	1	5	6	13	**19**	$ -	$ 100	$ 1,500	$ 375	**$ 1,975**	
137	6/3/2014	S BOISE AVE & W 1ST ST	SE	High	YES	YES	N/S	58	9.3	1.8	28.8	16	NO	YES	58	60	2.9	NO	11.7	1.5	YIELD	YES	YES	No	N/A	N/A	N/A	N/A	N/A	N/A	0	0	6	6	13	**19**	$ -	$ 100	$ 1,500	$ 375	**$ 1,975**	
139	6/3/2014	S COMMERCIAL AVE & W 12TH ST	NE	High	YES	YES	N/S	52	10.2	0.9	16.2	13.7	NO	NO	N/A	N/A	N/A	NO	8.1	1.4	STOP	NO	YES	No	N/A	N/A	N/A	N/A	N/A	N/A	0	0	6	6	13	**19**	$ -	$ 100	$ 1,500	$ 375	**$ 1,975**	
170	6/4/2014	S HAYES AVE & E 6TH ST	SW	High	YES	NO	N/S	36	0.9	1.9	N/A	N/A	YES	YES	62	60	2.5	YES	5.7	0.5	STOP	NO	YES	No	N/A	N/A	N/A	N/A	N/A	N/A	0	2	4	6	13	**19**	$ -	$ 100	$ 1,500	$ 375	**$ 1,975**	
173	6/4/2014	S HAYES AVE & E 5TH ST	NW	High	YES	YES	N/S	32	5.7	N/A	9.6	11.9	YES	YES	59	103	2.6	NO	8.9	1.1	STOP	NO	YES	No	N/A	N/A	N/A	N/A	N/A	N/A	0	0	6	6	13	**19**	$ -	$ 100	$ 1,500	$ 375	**$ 1,975**	
174	6/4/2014	S HAYES AVE & E 5TH ST	NE	High	YES	YES	E/W	52	13.4	N/A	23.1	19.7	NO	YES	58	48	2.3	NO	9.6	0	STOP	NO	YES	No	N/A	N/A	N/A	N/A	N/A	N/A	0	0	6	6	13	**19**	$ -	$ 100	$ 1,500	$ 375	**$ 1,975**	
195	6/5/2014	S HAYES AVE & E 2ND ST	NW	High	YES	YES	N/S	60	8.8	0.4	19.2	14.7	NO	YES	60	60	0.3	YES	6.3	0.9	STOP	YES	YES	No	N/A	N/A	N/A	N/A	N/A	N/A	0	1	5	6	13	**19**	$ -	$ 100	$ 1,500	$ 375	**$ 1,975**	
196	6/5/2014	S HAYES AVE & E 1ST ST	SW	High	YES	YES	N/S	42	11.9	1.1	23.4	32.2	NO	YES	68	62	1.5	YES	4.6	1	STOP	YES	YES	No	N/A	N/A	N/A	N/A	N/A	N/A	0	2	4	6	13	**19**	$ -	$ 100	$ 1,500	$ 375	**$ 1,975**	
199	6/5/2014	S HAYES AVE & E 1ST ST	SE	High	YES	YES	N/S	58	9.9	0.8	22.9	23.1	NO	YES	59	61	2.6	NO	15.2	0.1	STOP	YES	YES	No	N/A	N/A	N/A	N/A	N/A	N/A	0	0	6	6	13	**19**	$ -	$ 100	$ 1,500	$ 375	**$ 1,975**	
217	6/5/2014	E 1ST ST & S HAWTHORNE AVE	SW	High	YES	YES	E/W	59	1.4	2.6	N/A	N/A	NO	YES	59	58	2.4	YES	8.3	3.3	STOP	YES	YES	No	N/A	N/A	N/A	N/A	N/A	N/A	0	2	4	6	13	**19**	$ -	$ 100	$ 1,500	$ 375	**$ 1,975**	
224	6/5/2014	E 2ND ST & S HAWTHORNE AVE	SW	High	YES	YES	E/W	58	13.5	3.2	18.8	21.8	NO	YES	60	64	0.8	NO	7	0.7	NONE	NO	YES	No	N/A	N/A	N/A	N/A	N/A	N/A	0	0	6	6	13	**19**	$ -	$ 100	$ 1,500	$ 375	**$ 1,975**	Mail boxes at landing
266	6/9/2014	E 2ND ST & S MCKINLEY AVE	NW	High	YES	YES	E/W	59	4.6	4.4	N/A	N/A	YES	YES	60	56	4	YES	4.1	2.3	STOP	YES	YES	No	N/A	N/A	N/A	N/A	N/A	N/A	0	2	4	6	13	**19**	$ -	$ 100	$ 1,500	$ 375	**$ 1,975**	
279	6/9/2014	E 2ND ST & S WARDWELL AVE	NW	High	YES	YES	N/S	60	8.8	1	19.2	14.8	NO	YES	60	54	0.8	YES	9.9	0.8	STOP	NO	YES	No	N/A	N/A	N/A	N/A	N/A	N/A	0	1	5	6	13	**19**	$ -	$ 100	$ 1,500	$ 375	**$ 1,975**	
283	6/9/2014	S HAWTHORNE AVE & E 5TH ST	SE	High	YES	YES	E/W	55	11.7	0.4	20.5	16.8	NO	NO	N/A	N/A	N/A	NO	5.3	0.2	STOP	NO	YES	No	N/A	N/A	N/A	N/A	N/A	N/A	0	0	6	6	13	**19**	$ -	$ 100	$ 1,500	$ 375	**$ 1,975**	
303	6/10/2014	E 2ND ST & S BUTTE AVE	NE	High	YES	YES	E/W	52	7.4	0.9	14.3	22.3	NO	YES	56	61	3.7	YES	12.6	0.4	NONE	NO	YES	No	N/A	N/A	N/A	N/A	N/A	N/A	0	1	5	6	13	**19**	$ -	$ 100	$ 1,500	$ 375	**$ 1,975**	
306	6/10/2014	E 2ND ST & S MOFFAT AVE	SE	High	YES	YES	N/S	28	10.7	0.3	10.8	10	NO	NO	N/A	N/A	N/A	NO	10.4	0.4	NONE	NO	YES	No	N/A	N/A	N/A	N/A	N/A	N/A	0	0	6	6	13	**19**	$ -	$ 100	$ 1,500	$ 375	**$ 1,975**	
310	6/10/2014	E 2ND ST & S DECLARK AVE	NW	High	YES	YES	E/W	55	9.5	1	16.2	N/A	YES	YES	55	60	1	YES	10.5	0.9	NONE	YES	YES	No	N/A	N/A	N/A	N/A	N/A	N/A	0	1	5	6	13	**19**	$ -	$ 100	$ 1,500	$ 375	**$ 1,975**	
311	6/10/2014	E 3RD ST & HAZEL AVE	SW	High	YES	YES	E/W	59	13.8	4.5	14	15.6	NO	YES	59	60	1.6	YES	10.2	0.5	STOP	YES	YES	No	N/A	N/A	N/A	N/A	N/A	N/A	0	1	6	7	12	**19**	$ -	$ 100	$ 1,500	$ 375	**$ 1,975**	
312	6/10/2014	E 3RD ST & HAZEL AVE	SE	High	YES	YES	E/W	50	10.5	5.2	N/A	17.7	NO	YES	50	68	1.1	YES	8.3	3.6	STOP	YES	YES	No	N/A	N/A	N/A	N/A	N/A	N/A	0	2	5	7	12	**19**	$ -	$ 100	$ 1,500	$ 375	**$ 1,975**	
316	6/10/2014	E 4TH ST & S PINE AVE	NW	High	YES	YES	E/W	66	9.1	0.7	23.1	10.8	NO	NO	N/A	N/A	N/A	NO	7.3	0.8	STOP	NO	YES	No	N/A	N/A	N/A	N/A	N/A	N/A	0	0	6	6	13	**19**	$ -	$ 100	$ 1,500	$ 375	**$ 1,975**	
321	6/10/2014	E 4TH ST & S DECLARK AVE	NE	High	YES	YES	E/W	60	2.1	4.1	N/A	N/A	YES	YES	60	48	3.7	NO	35	2.7	STOP	YES	YES	No	N/A	N/A	N/A	N/A	N/A	N/A	0	1	5	6	13	**19**	$ -	$ 100	$ 1,500	$ 375	**$ 1,975**	
329	6/10/2014	E 4TH ST & S HAWTHORNE AVE	SW	High	YES	YES	N/S	40	4.8	0	4.7	13.9	YES	YES	57	88	0.6	YES	17.7	1.6	STOP	NO	YES	No	N/A	N/A	N/A	N/A	N/A	N/A	0	2	4	6	13	**19**	$ -	$ 100	$ 1,500	$ 375	**$ 1,975**	
462	6/16/2014	E MAIN ST & S PINE AVE	SW	High	YES	YES	E/W	60	8.7	0.6	14.4	11.2	NO	NO	N/A	N/A	N/A	NO	7	0.8	STOP	NO	YES	No	N/A	N/A	N/A	N/A	N/A	N/A	0	0	6	6	13	**19**	$ -	$ 100	$ 1,500	$ 375	**$ 1,975**	
490	6/16/2014	E MAIN ST & N MCKINLEY AVE	NE	High	YES	YES	N/S	60	10.4	1.4	12.3	N/A	NO	YES	76	60	2.5	YES	7.3	0.4	STOP	YES	YES	No	N/A	N/A	N/A	N/A	N/A	N/A	0	1	5	6	13	**19**	$ -	$ 100	$ 1,500	$ 375	**$ 1,975**	
227	6/6/2014	S JOHNS AVE & ALBERTSONS PARKING LOT	SE	High	YES	YES	N/S	36	6.1	2.8	6.7	8.5	NO	YES	68	58	3.2	NO	6	0.9	STOP	NO	YES	No	N/A	N/A	N/A	N/A	N/A	N/A	0	1	4	5	13	**18**	$ -	$ 100	$ 1,500	$ 375	**$ 1,975**	
230	6/6/2014	S JOHNS AVE & LIBERTY LN	NE	High	YES	YES	N/S	36	7.3	1.7	3.7	8.6	NO	NO	N/A	N/A	N/A	NO	6.2	2.4	STOP	YES	YES	No	N/A	N/A	N/A	N/A	N/A	N/A	0	2	3	5	13	**18**	$ -	$ 100	$ 1,500	$ 375	**$ 1,975**	4" Curb w/ crosswalk approach
231	6/6/2014	S JOHNS AVE & INDEPENDENCE LN	SE	High	YES	YES	N/S	41	8.4	1.8	8.2	6.7	NO	NO	N/A	N/A	N/A	NO	6.3	2	STOP	YES	YES	No	N/A	N/A	N/A	N/A	N/A	N/A	0	1	4	5	13	**18**	$ -	$ 100	$ 1,500	$ 375	**$ 1,975**	
232	6/6/2014	S JOHNS AVE & INDEPENDENCE LN	NE	High	YES	YES	N/S	38	5.9	2.8	4.8	7.9	NO	NO	N/A	N/A	N/A	NO	2	5.7	STOP	YES	YES	No	N/A	N/A	N/A	N/A	N/A	N/A	0	2	3	5	13	**18**	$ -	$ 100	$ 1,500	$ 375	**$ 1,975**	
234	6/6/2014	S JOHNS AVE & E 12TH ST	NE	High	YES	YES	N/S	65	10.4	1.5	7.8	10.2	NO	NO	N/A	N/A	N/A	NO	6.2	0.2	STOP	YES	YES	No	N/A	N/A	N/A	N/A	N/A	N/A	0	0	5	5	13	**18**	$ -	$ 100	$ 1,500	$ 375	**$ 1,975**	
359	6/11/2014	E QUAIL RUN RD & PLAZA OFFICE SUITES LOT	SE	High	YES	YES	E/W	42	3.5	1.2	5.2	5	YES	YES	42	19	4.5	NO	6.6	0.6	NONE	NO	YES	No	N/A	N/A	N/A	N/A	N/A	N/A	0	2	5	7	11	**18**	$ -	$ 100	$ 1,500	$ 375	**$ 1,975**	
403	6/12/2014	S SUBSTATION RD & FELTHAM PEAK DR	NE	High	YES	YES	N/S	35	8.5	N/A	8.9	8.2	YES	YES	35	49	3.3	NO	4.8	2.4	STOP	YES	YES	No	N/A	N/A	N/A	N/A	N/A	N/A	0	1	6	7	11	**18**	$ -	$ 100	$ 1,500	$ 375	**$ 1,975**	
417	6/12/2014	E 12TH ST & REGENCY WAY	NE	High	YES	YES	N/S	36	3.9	N/A	2	10.7	YES	YES	40	48	7.5	NO	6.6	4.8	STOP

Not Compliant With:	
	ADAAG
	PROWAG
	BOTH

Priority	Number	Costs
High	163	$ 317,050
Medium	254	$ 458,200
Low	95	$ 128,700
Compliant	8	$ -
Total:	**520**	**$ 903,950**

	Location Details						Ramp						Landing				Transition Details						Detectable Warning Surfaces							Priority Score						Correction Costs					
GIS ID	Inspection Date	Crossing Description	Location	Priority	Sidewalk	Curb & Gutter	Ramp Direction	Ramp Width (in)	Running Slope (%)	Cross Slope (%)	Flare Slope A (%)	Flare Slope B (%)	Discontinuities	Landing Provided	Landing Width (in)	Landing Depth (in)	Maximum Slope (%)	Lip Present	Gutter Counter Slope (%)	Gutter Flowline Slope at Ramp (%)	Traffic Control	Marked X-Walk	X-Walk Clear Space	Domes	Depth (in)	Spans Curb Cut	Within 8 inches of Curb Line	Color	Color Contrast	Dome Dimensions are Correct	Number ADAAG	Number PROWAG	Number BOTH	Total Compliance Score	Location Score	**Composite Score**	Cost Add Domes	Cost Remove Existing	Add New Ramp	Modify Curb & Gutter	**Total Cost**	Comment
143	6/3/2014	S COMMERCIAL AVE & W 5TH ST	NE	High	YES	YES	N/S	60	7.6	3.3	N/A	N/A	NO	YES	57	56	3.3	YES	8	0.3	NONE	NO	YES	No	N/A	N/A	N/A	N/A	N/A	N/A	0	1	4	5	12	**17**	$ -	$ 100	$ 1,500	$ 375	**$ 1,975**	
144	6/3/2014	S COMMERCIAL AVE & W 5TH ST	NW	High	YES	NO	E/W	60	7.9	3.8	N/A	N/A	YES	YES	60	58	1.2	NO	6.1	2.8	NONE	NO	YES	No	N/A	N/A	N/A	N/A	N/A	N/A	0	1	4	5	12	**17**	$ -	$ 100	$ 1,500	$ 375	**$ 1,975**	
181	6/4/2014	S HAYES AVE & E 3RD ST	SW	High	YES	YES	N/S	56	11.6	0.2	41.2	31.6	NO	YES	60	60	2	NO	12.3	0.5	STOP	YES	YES	No	N/A	N/A	N/A	N/A	N/A	N/A	0	0	5	5	12	**17**	$ -	$ 100	$ 1,500	$ 375	**$ 1,975**	
183	6/4/2014	S HAYES AVE & E 3RD ST	NE	High	YES	YES	N/S	60	9.7	0.1	19.7	18.4	NO	YES	60	54	1	YES	N/A	0.5	STOP	YES	YES	No	N/A	N/A	N/A	N/A	N/A	N/A	0	1	4	5	12	**17**	$ -	$ 100	$ 1,500	$ 375	**$ 1,975**	
184	6/4/2014	S HAYES AVE & E 3RD ST	NE	High	YES	YES	E/W	60	9.9	0.6	13.5	15.8	N/A	NO	YES	54	60	1	NO	6.8	1	STOP	YES	YES	No	N/A	N/A	N/A	N/A	N/A	N/A	0	0	5	5	12	**17**	$ -	$ 100	$ 1,500	$ 375	**$ 1,975**	
188	6/5/2014	S HAYES AVE & E 2ND ST	SW	High	YES	YES	N/S	60	7	0.2	18.6	13.4	NO	YES	60	60	1.8	YES	5.8	0.5	STOP	YES	YES	No	N/A	N/A	N/A	N/A	N/A	N/A	0	1	4	5	12	**17**	$ -	$ 100	$ 1,500	$ 375	**$ 1,975**	
194	6/5/2014	S HAYES AVE & E 2ND ST	NW	High	YES	YES	E/W	58	7.8	0.5	16	46.5	YES	YES	60	60	0.3	YES	3.4	0.1	STOP	YES	YES	No	N/A	N/A	N/A	N/A	N/A	N/A	0	1	4	5	12	**17**	$ -	$ 100	$ 1,500	$ 375	**$ 1,975**	
204	6/5/2014	E 1ST ST & S WARDWELL AVE	SW	High	YES	YES	N/S	55	4.1	N/A	14.7	11.7	NO	YES	84	84	2.2	NO	10.1	0.3	STOP	NO	YES	No	N/A	N/A	N/A	N/A	N/A	N/A	0	0	5	5	12	**17**	$ -	$ 100	$ 1,500	$ 375	**$ 1,975**	
205	6/5/2014	E 1ST ST & S WARDWELL AVE	SW	High	YES	YES	E/W	84	7.6	1	15.9	25.6	NO	YES	84	84	2.2	NO	9.2	0.1	STOP	YES	YES	No	N/A	N/A	N/A	N/A	N/A	N/A	0	0	5	5	12	**17**	$ -	$ 100	$ 1,500	$ 375	**$ 1,975**	
206	6/5/2014	E 1ST ST & S WARDWELL AVE	SE	High	YES	YES	E/W	59	8.3	1.3	11.8	15.6	NO	YES	60	60	2.5	NO	10	1.2	STOP	YES	YES	No	N/A	N/A	N/A	N/A	N/A	N/A	0	0	5	5	12	**17**	$ -	$ 100	$ 1,500	$ 375	**$ 1,975**	
207	6/5/2014	E 1ST ST & S WARDWELL AVE	SE	High	YES	YES	N/S	60	7	0.7	16	11.4	NO	YES	60	60	2.5	NO	8.8	0.6	STOP	NO	YES	No	N/A	N/A	N/A	N/A	N/A	N/A	0	0	5	5	12	**17**	$ -	$ 100	$ 1,500	$ 375	**$ 1,975**	6" Curb w/ crosswalk approach
210	6/5/2014	E 1ST ST & S MCKINLEY AVE	SW	High	YES	YES	N/S	60	8.9	1.1	22.6	22.7	NO	YES	60	58	1.3	YES	N/A	1.5	STOP	YES	YES	No	N/A	N/A	N/A	N/A	N/A	N/A	0	1	4	5	12	**17**	$ -	$ 100	$ 1,500	$ 375	**$ 1,975**	
214	6/5/2014	E 1ST ST & S MCKINLEY AVE	NE	High	YES	YES	E/W	62	9.6	2.4	5.1	6.7	NO	YES	82	58	2.2	NO	6.7	0.6	STOP	YES	YES	No	N/A	N/A	N/A	N/A	N/A	N/A	0	0	5	5	12	**17**	$ -	$ 100	$ 1,500	$ 375	**$ 1,975**	
216	6/5/2014	E 1ST ST & S MCKINLEY AVE	NW	High	YES	YES	N/S	60	9.7	0.7	21.8	23.9	NO	YES	60	58	1.6	NO	10.6	1.3	STOP	YES	YES	No	N/A	N/A	N/A	N/A	N/A	N/A	0	0	5	5	12	**17**	$ -	$ 100	$ 1,500	$ 375	**$ 1,975**	
220	6/5/2014	E 1ST ST & S HAWTHORNE AVE	NW	High	YES	YES	E/W	45	5.5	2.9	3.2	N/A	NO	YES	90	48	2.6	NO	4	2.4	STOP	NO	YES	No	N/A	N/A	N/A	N/A	N/A	N/A	0	2	3	5	12	**17**	$ -	$ 100	$ 1,500	$ 375	**$ 1,975**	
221	6/5/2014	E 2ND ST & S HAWTHORNE AVE	SE	High	YES	YES	E/W	56	13.5	0.1	21.2	18.8	NO	YES	59	63	0.1	NO	5.9	1.7	NONE	NO	YES	No	N/A	N/A	N/A	N/A	N/A	N/A	0	0	5	5	12	**17**	$ -	$ 100	$ 1,500	$ 375	**$ 1,975**	
222	6/5/2014	E 2ND ST & S HAWTHORNE AVE	NE	High	YES	YES	E/W	60	6	0.7	14.7	12.9	NO	YES	60	49	1.4	NO	11.2	2.2	NONE	NO	YES	No	N/A	N/A	N/A	N/A	N/A	N/A	0	1	4	5	12	**17**	$ -	$ 100	$ 1,500	$ 375	**$ 1,975**	
245	6/6/2014	S JOHNS AVE & E 5TH ST	NE	High	YES	YES	N/S	60	2.3	2.7	N/A	N/A	YES	YES	60	63	0.3	YES	1.3	3	STOP	NO	YES	No	N/A	N/A	N/A	N/A	N/A	N/A	0	2	3	5	12	**17**	$ -	$ 100	$ 1,500	$ 375	**$ 1,975**	Slight drop off onto road
249	6/6/2014	S JOHNS AVE & E 3RD ST	NE	High	YES	YES	N/S	59	9.9	1.1	21.9	22.9	NO	YES	59	55	1.9	NO	8	0.9	STOP	YES	YES	No	N/A	N/A	N/A	N/A	N/A	N/A	0	0	5	5	12	**17**	$ -	$ 100	$ 1,500	$ 375	**$ 1,975**	
250	6/6/2014	S JOHNS AVE & E 3RD ST	NE	High	YES	YES	E/W	55	6.8	2.9	23.1	15	NO	YES	55	59	1.8	NO	7.6	0.2	STOP	YES	YES	No	N/A	N/A	N/A	N/A	N/A	N/A	0	0	5	5	12	**17**	$ -	$ 100	$ 1,500	$ 375	**$ 1,975**	
257	6/6/2014	S JOHNS AVE & E 2ND ST	NW	High	YES	YES	N/S	56	11.2	1.2	N/A	N/A	YES	YES	59	59	1.8	YES	16.8	0.7	STOP	YES	YES	No	N/A	N/A	N/A	N/A	N/A	N/A	0	1	4	5	12	**17**	$ -	$ 100	$ 1,500	$ 375	**$ 1,975**	
267	6/9/2014	E 2ND ST & S MCKINLEY AVE	NW	High	YES	YES	N/S	48	1.5	3.5	N/A	N/A	YES	YES	56	60	4	YES	4.2	1.5	STOP	YES	YES	No	N/A	N/A	N/A	N/A	N/A	N/A	0	1	4	5	12	**17**	$ -	$ 100	$ 1,500	$ 375	**$ 1,975**	
269	6/9/2014	E 3RD ST & S HAWTHORNE AVE	NW	High	YES	YES	E/W	64	0.4	0.6	N/A	N/A	YES	YES	58	56	2.4	YES	0.1	2.4	NONE	YES	YES	No	N/A	N/A	N/A	N/A	N/A	N/A	0	2	3	5	12	**17**	$ -	$ 100	$ 1,500	$ 375	**$ 1,975**	6" Curb w/ sidewalk approach
276	6/9/2014	E 2ND ST & S WARDWELL AVE	SE	High	YES	YES	E/W	N/A	14	5.2	N/A	N/A	YES	YES	54	48	2	YES	N/A	N/A	STOP	YES	YES	No	N/A	N/A	N/A	N/A	N/A	N/A	0	1	4	5	12	**17**	$ -	$ 100	$ 1,500	$ 375	**$ 1,975**	
277	6/9/2014	E 2ND ST & S WARDWELL AVE	NE	High	YES	YES	E/W	58	7.7	1.8	14.9	15.9	NO	YES	58	67	1.7	NO	13	2.9	STOP	YES	YES	No	N/A	N/A	N/A	N/A	N/A	N/A	0	1	4	5	12	**17**	$ -	$ 100	$ 1,500	$ 375	**$ 1,975**	
278	6/9/2014	E 2ND ST & S WARDWELL AVE	NW	High	YES	YES	E/W	54	8.6	0.5	12.9	13.6	NO	YES	54	60	0.8	NO	9.4	0.7	STOP	YES	YES	No	N/A	N/A	N/A	N/A	N/A	N/A	0	0	5	5	12	**17**	$ -	$ 100	$ 1,500	$ 375	**$ 1,975**	Landing width/depth measured at length of radius from corner
314	6/10/2014	E 3RD ST & S PINE AVE	SW	High	YES	YES	N/S	54	8.4	1.4	17.3	13.1	NO	NO	N/A	N/A	N/A	NO	4.3	1.3	STOP	YES	YES	No	N/A	N/A	N/A	N/A	N/A	N/A	0	0	5	5	12	**17**	$ -	$ 100	$ 1,500	$ -	**$ 1,600**	
319	6/10/2014	E 4TH ST & S MOFFAT AVE	NE	High	YES	YES	E/W	50	12	N/A	17	17	NO	NO	N/A	N/A	N/A	NO	1.6	0	STOP	YES	YES	No	N/A	N/A	N/A	N/A	N/A	N/A	0	0	5	5	12	**17**	$ -	$ 100	$ 1,500	$ -	**$ 1,600**	
322	6/10/2014	E 4TH ST & S DECLARK AVE	NW	High	YES	YES	E/W	50	10.6	4.3	N/A	N/A	YES	YES	50	52	0.4	NO	2.2	2.5	STOP	YES	YES	No	N/A	N/A	N/A	N/A	N/A	N/A	0	1	4	5	12	**17**	$ -	$ 100	$ 1,500	$ 375	**$ 1,975**	
323	6/10/2014	E 4TH ST & S DECLARK AVE	SE	High	YES	YES	E/W	48	6.9	0	14.9	16.8	NO	NO	N/A	N/A	N/A	YES	6.8	0.1	STOP	NO	YES	No	N/A	N/A	N/A	N/A	N/A	N/A	0	1	5	6	11	**17**	$ -	$ 100	$ 1,500	$ 375	**$ 1,975**	
448	6/13/2014	E PARK ST & MAPLE ST	NE	High	YES	YES	N/S	58	8.2	1.3	18.5	10.3	NO	YES	58	58	1.1	NO	7.2	2.3	NONE	NO	YES	No	N/A	N/A	N/A	N/A	N/A	N/A	0	1	4	5	12	**17**	$ -	$ 100	$ 1,500	$ 375	**$ 1,975**	
449	6/13/2014	E PARK ST & MAPLE ST	NE	High	YES	YES	E/W	58	5.9	1.4	14.3	11.3	NO	YES	58	58	1.1	NO	5.9	2.1	NONE	NO	YES	No	N/A	N/A	N/A	N/A	N/A	N/A	0	1	4	5	12	**17**	$ -	$ 100	$ 1,500	$ 375	**$ 1,975**	
465	6/16/2014	E MAIN ST & N MOFFAT AVE	NE	High	YES	YES	E/W	52	6.5	7.6	N/A	N/A	YES	YES	54	60	5.1	YES	3.1	0.7	STOP	NO	YES	No	N/A	N/A	N/A	N/A	N/A	N/A	0	1	4	5	12	**17**	$ -	$ 100	$ 1,500	$ 375	**$ 1,975**	
467	6/16/2014	E MAIN ST & N DECLARK AVE	NE	High	YES	YES	N/S	64	10.4	1.4	N/A	13.9	YES	NO	N/A	N/A	N/A	YES	0.5	1.1	STOP	YES	YES	No	N/A	N/A	N/A	N/A	N/A	N/A	0	1	5	6	11	**17**	$ -	$ 100	$ 1,500	$ 375	**$ 1,975**	
477	6/16/2014	E MAIN ST & POST OFFICE EXIT ONLY	SW	High	YES	YES	E/W	48	7.1	4.2	15.1	4.9	NO	YES	48	50	3.1	NO	3.5	3.3	STOP	NO	YES	No	N/A	N/A	N/A	N/A	N/A	N/A	0	1	4	5	12	**17**	$ -	$ 100	$ 1,500	$ 375	**$ 1,975**	
479	6/16/2014	E MAIN ST & POST OFFICE ENTRANCE	SW	High	YES	YES	E/W	48	6.6	6.7	12.7	5.3	NO	YES	48	48	3.6	NO	2.7	3.7	NONE	NO	YES	No	N/A	N/A	N/A	N/A	N/A	N/A	0	1	4	5	12	**17**	$ -	$ 100	$ 1,500	$ 375	**$ 1,975**	
482	6/16/2014	E MAIN ST & GEM COUNTY BUILDING	S	High	YES	YES	N/S	90	9.1	2.1	13.2	12.7	NO	YES	94	60	2	NO	1.7	0.7	NONE	NO	YES	No	N/A	N/A	N/A	N/A	N/A	N/A	0	0	5	5	12	**17**	$ -	$ 100	$ 1,500	$ -	**$ 1,600**	
519	6/16/2015	E MAIN S T & EVERGREEN DR	NW	High	YES	YES	E/W	55	10.1	5.8	N/A	N/A	NO	YES	57	63	2.9	NO	9.2	0.7	STOP	NO	YES	No	N/A	N/A	N/A	N/A	N/A	N/A	0	0	5	5	12	**17**	$ -	$ 100	$ 1,500	$ 375	**$ 1,975**	
22	5/28/2014	MILL & HOMESTEAD	NW	High	YES	YES	N/S	95	6.8	2.1	7.5	12.4	YES	YES	95	47	1.3	NO	10.8	2.3	STOP	NO	YES	No	N/A	N/A	N/A	N/A	N/A	N/A	0	2	5	7	9	**16**	$ -	$ 100	$ 1,500	$ 375	**$ 1,975**	
105	6/2/2014	N BUTTE AVE & FERNLEE ST	NW	High	YES	YES	N/S	48	8.6	0.4	7.4	13.9	NO	NO	N/A	N/A	N/A	YES	5.4	1	NONE	NO	YES	No	N/A	N/A	N/A	N/A	N/A	N/A	0	1	5	6	10	**16**	$ -	$ 100	$ 1,500	$ 375	**$ 1,975**	
225	6/6/2014	S JOHNS AVE & ALBERTSONS PARKING LOT	SE	High	YES	YES	N/S	37	3.3	4.2	9.9	3.7	NO	YES	68	60	3.2	NO	4.3	0.5	STOP	NO	YES	No	N/A	N/A	N/A	N/A	N/A	N/A	0	1	3	4	12	**16**	$ -	$ 100	$ 1,500	$ -	**$ 1,600**	
226	6/6/2014	S JOHNS AVE & ALBERTSONS PARKING LOT	NE	High	YES	YES	N/S	46	6.9	0.4	6.6	8.4	NO	YES	46	N/A	2.6	NO	5	1.4	STOP	NO	YES	No	N/A	N/A	N/A	N/A	N/A	N/A	0	2	2	4	12	**16**	$ -	$ 100	$ 1,500	$ -	**$ 1,600**	
229	6/6/2014	S JOHNS AVE & LIBERTY LN	SE	High	YES	YES	N/S	35	7.7	0.3	7.1	4.7	NO	NO	N/A	N/A	N/A	NO	6	1.2	STOP	YES	YES	No	N/A	N/A	N/A	N/A	N/A	N/A	0	0	4	4	12	**16**	$ -	$ 100	$ 1,500	$ 375	**$ 1,975**	
239	6/6/2014	S JOHNS AVE & E 7TH ST	NE	High	YES	YES	N/S	60	0.5	1.8	N/A	N/A	YES	YES	60	52	2.4	YES	10.3	0.2	STOP	NO	YES	No	N/A	N/A	N/A	N/A	N/A	N/A	0	1	4	5	11	**16**	$ -	$ 100	$ 1,500	$ 375	**$ 1,975**	
285	6/9/2014	S HAWTHORNE AVE & E 7TH ST	NE	High	YES	YES	E/W	38	4	0.9	N/A	N/A	YES	NO	N/A	N/A	N/A	NO	2.1	2.1	STOP	NO	YES	No	N/A	N/A	N/A	N/A	N/A	N/A	0	2	3	5	11	**16**	$ -	$ 100	$ 1,500	$ 375	**$ 1,975**	
288	6/9/2014	OLD GLORY WAY & E 7TH ST	NE	High	YES	YES	E/W	50	7.3	1.7	8.2	4.8	NO	YES	52	44	2.7	NO	6.1	4.4	STOP	NO	YES	No	N/A	N/A	N/A	N/A	N/A	N/A	0	2	3	5	11	**16**	$ -	$ 100	$ 1,500	$ 375	**$ 1,975**	
361	6/11/2014	E QUAIL RUN RD & ALBERTA AVE	NE	High	YES	YES	E/W	31	8.6	N/A	2.7	8.7	YES	YES	32	48	3.4	NO	5.9	1.8	STOP	NO	YES	No	N/A	N/A	N/A	N/A	N/A	N/A	0	0	7	7	9	**16**	$ -	$ 100	$ 1,500	$ 375	**$ 1,975**	
364	6/11/2014	E QUAIL RUN RD & REGENCY WAY	SE	High	YES	YES	E/W	37	5.3	3.8	9.1	3.2	NO	YES	37	57	2.6	NO	5.8	2.6	STOP	NO	YES	No	N/A	N/A	N/A	N/A	N/A	N/A	0	3	4	7	9	**16**	$ -	$ 100	$ 1,500	$ 375	**$ 1,975**	
409	6/12/2014	S SUBSTATION RD & ELEMENTARY SCHOOL LOT (NORTH)	NW	High	YES	YES	N/S	36	2.1	N/A	7.1	2.1	NO	YES	48	48	3.3	YES	8.2	3.2	NONE	NO	YES	No	N/A	N/A	N/A	N/A	N/A	N/A	0	3	3	6	10	**16**	$ -	$ 100	$ 1,500	$ 375	**$ 1,975**	
413	6/12/2014	E 12TH ST & ROYALTY AVE	NE	High	YES	YES	N/S	36	1.9	N/A	2.9	10.3	YES	YES	48	48	3.6	NO	5.7	3	STOP	NO	YES	No	N/A	N/A	N/A	N/A	N/A	N/A	0	2	5	7	9	**16**	$ -	$ 100	$ 1,500	$ 375	**$ 1,975**	
414	6/12/2014	E 12TH ST & ROYALTY AVE	NE	High	YES	YES	E/W	38	7.9	N/A	N/A	11.3	YES	YES	48	48	3.8	NO	7.5	2.4	STOP	NO	YES	No	N/A	N/A	N/A	N/A	N/A	N/A	0	2	5	7	9	**16**	$ -	$ 100	$ 1,500	$ 375	**$ 1,975**	
425	6/12/2014	E 12TH ST & S SUBSTATION RD	NW	High	YES	YES	N/S	36	5.9	N/A	5.1	10.8	NO	YES	48	48	2.8	NO	7	3.5	STOP	YES	YES	No	N/A	N/A	N/A	N/A	N/A	N/A	0	2	4	6	10	**16**	$ -	$ 100	$ 1,500	$ 375	**$ 1,975**	
8	5/28/2014	APACHE ST & S. CHEROKEE AVE	SE	High	YES	YES	E/W	39	5	2.4	4.5	7	YES	YES	39	36	1.8	NO	3.6	0.7	STOP	NO	YES	No	N/A	N/A	N/A	N/A	N/A	N/A	0	3	3	6	9.5	**15.5**	$ -	$ 100	$ 1,500	$ -	**$ 1,600**	
19	5/28/2014	CHEYENNE & CHEROKEE	NE	High	YES	YES	N/S	31	5.3	N/A	5	9.4	NO	NO	N/A	N/A	N/A	NO	6.9	2.5	STOP	NO	YES	No	N/A	N/A	N/A	N/A	N/A	N/A	0	1	4	5	10.5	**15.5**	$ -	$ 100	$ 1,500	$ 375	**$ 1,975**	
44	5/29/2014	W 12TH ST & S CHEROKEE AVE	NE	High	YES	YES	E/W	28	8.1	N/A	8.2	3.9	NO	NO	N/A	N/A	N/A	NO	8.2	2.2	STOP	YES	YES	No	N/A	N/A	N/A	N/A	N/A	N/A	0	1	4	5	10.5	**15.5**	$ -	$ 100	$ 1,500	$ 375	**$ 1,975**	
48	5/29/2014	W 12TH ST & WILLIAMS RD	SW	High	YES	YES	N/S	41	6	0.6	7.4	7.2	YES	NO	N/A	N/A	N/A	YES	N/A	0.6	STOP	YES	YES	No	N/A	N/A	N/A	N/A	N/A	N/A	0	2	3	5	10.5	**15.5**	$ -	$ 100	$ 1,500	$ 375	**$ 1,975**	
94	6/2/2014	E LOCUST ST & MAPLE AVE	SW	High	YES	YES	E/W	48	8.3	3.4	12	12.1	NO	YES	58	62	1.6	NO	6.6	2	STOP	NO	YES	No	N/A	N/A	N/A	N/A	N/A	N/A	0	0	5	5	10.5	**15.5**	$ -	$ 100	$ 1,500	$ 375	**$ 1,975**	
97	6/2/2014	E LOCUST ST & N MOFFATT AVE	NE	High	YES	YES	E/W	36	7	0.1	4	4.6	NO	YES	36	46	3.4	NO	2.8	0.2	STOP	NO	YES	No	N/A	N/A	N/A	N/A	N/A	N/A	0	3	2	5	10.5	**15.5**	$ -	$ 100	$ 1,500	$ -	**$ 1,600**	
99	6/2/2014	E LOCUST ST & N PINE AVE	SW	High	YES	YES	E/W	52	3.1	0.2	8.2	11.2	NO	NO	N/A	N/A	N/A	YES	8.4	1.7	STOP	NO	YES	No	N/A	N/A	N/A	N/A	N/A	N/A	0	1	4	5	10.5	**15.5**	$ -	$ 100	$ 1,500	$ 375	**$ 1,975**	
102	6/2/2014	E LOCUST ST & RIGGS ST	SE	High	YES	YES	E/W	144	2.4	4.2	10.8	1.1	NO	NO	N/A	N/A	N/A	NO	0	3.3	STOP	NO	YES	No	N/A	N/A	N/A	N/A	N/A	N/A	0	1	4	5	10.5	**15.5**	$ -	$ 100	$ 1,500	$ 375	**$ 1,975**	
113	6/2/2014	N MOFFATT AVE & FERNLEE ST	NW	High	YES	YES	N/S	35	7.3	N/A	12.1	10.1	NO	NO	N/A	N/A	N/A	NO	2.8	1.7	NONE	NO	YES	No	N/A	N/A	N/A	N/A	N/A	N/A	0	0	5	5	10.5	**15.5**	$ -	$ 100	$ 1,500	$ -	**$ 1,600**	
187	6/4/2014	E 12TH ST & JUDO LN	SE	High	YES	YES	E/W	119	7.7	2.4	7.1	3.3	YES	YES	119	48	1.5	NO	6.7	0.7	STOP	NO	YES	No	N/A	N/A	N/A	N/A	N/A	N/A	0	0	4	4	11.5	**15.5**	$ -	$ 100	$ 1,500	$ 375	**$ 1,975**	Landing & sidewalk overgrown with grass
441	6/13/2014	N PINE AVE & E PARK ST	NE	High	YES	YES	N/S	65	7.9	1	8.5	4.8	YES	NO	N/A	N/A	N/A	YES	15.4	0.3	STOP	NO	YES	No	N/A	N/A	N/A	N/A	N/A	N/A	0	1	4	5	10.5	**15.5**	$ -	$ 100	$ 1,500	$ 375	**$ 1,975**	
52	5/29/2014	CARSON ST & N COMMERCIAL AVE	SW	Medium	YES	YES	N/S	60	10.4	0.1	41.2	35.5	NO	YES	60	55	1.3	NO	18.8	0.8	STOP	NO	YES	No	N/A	N/A	N/A	N/A	N/A	N/A	0	0	5	5	10	**15**	$ -	$ 100	$ 1,500	$ 375	**$ 1,975**	
54	5/29/2014	CARSON ST & N COMMERCIAL AVE	NE	Medium	YES	YES	N/S	60	5.5	1.2	31.6	30.9	NO	YES	60	57	3.1	NO	4.4	4	STOP	NO	YES	No	N/A	N/A	N/A	N/A	N/A	N/A	0	1	4	5	10	**15**	$ -	$ 100	$ 1,500	$ 375	**$ 1,975**	6" Curb w/ crosswalk approach
56	5/29/2014	N COMMERCIAL ST & BARTON ST	NE	Medium	YES	YES	N/S	60	9.8	0.7	29.4	35	NO	YES	60	58	2.4	NO	3.5	1.7	STOP	NO	YES	No	N/A	N/A	N/A	N/A	N/A	N/A	0	0	5	5	10	**15**	$ -	$ 100	$ 1,500	$ -	**$ 1,600**	
60	5/29/2014	N COMMERCIAL ST & BARTON ST	SW	Medium	YES	YES	N/S	58	11.4	0.9	20	19.1	NO	YES	58	49	5.2	NO	3.6	0	STOP	NO	YES	No	N/A	N/A	N/A	N/A	N/A	N/A	0	0	5	5	10	**15**	$ -	$ 100	$ 1,500	$ -	**$ 1,600**	
61	5/29/2014	MUSSER ST & N COMMERCIAL ST	NW	Medium	YES	YES	N/S	52	2.8	1.2	22.1	20.8	NO	YES	52	58	2.3	NO	3.5	0.9	STOP	NO	YES	No	N/A	N/A	N/A	N/A	N/A	N/A	0	0	4	4	11	**15**	$ -	$ 100	$ 1,500	$ -	**$ 1,600**	
63	5/29/2014	DION ST & N COMMERCIAL ST	SE	Medium	YES	YES	N/S	52	6.8	0.6	25.3	N/A	NO	YES	52	54	2.1	NO	5.9	1.5	STOP	NO	YES	No	N/A	N/A	N/A	N/A	N/A	N/A	0	0	4	4	11	**15**	$ -	$ 100	$ 1,500	$ 375	**$ 1,975**	
68	5/29/2014	DION ST & N COMMERCIAL ST	SW	Medium	YES	YES	N/S	58	7.3	1.5	15.2	19	NO	YES	58	48	1	NO	7.4	0.4	NONE	NO	YES	No	N/A	N/A	N/A	N/A	N/A	N/A	0	0	4	4	11	**15**	$ -	$ 100	$ 1,500	$ 375	**$ 1,975**	
71	5/30/2014	N BOISE AVE & DION ST	SE	Medium	YES	YES	N/S	57	7.3	0.5	21.1	25.2	NO	YES	58	60	1.9	NO	6.8	1.5	NONE	NO	YES	No	N/A	N/A	N/A	N/A	N/A	N/A	0	0	4	4	11	**15**	$ -	$ 100	$ 1,500	$ 375	**$ 1,975**	
74	5/30/2014	N BOISE AVE & DION ST	NW	Medium	YES	YES	E/W	51	7.7	0.5	29.1	28.7	NO	YES	51	58	0.5	NO	5.8	0.6	NONE	NO	YES	No	N/A	N/A	N/A	N/A	N/A	N/A	0	0	4	4	11	**15**	$ -	$ 100	$ 1,500	$ 375	**$ 1,975**	
76	5/30/2014	N BOISE AVE & MUSSER ST	SW	Medium	YES	YES	N/S	56	7.2	0.2	25.1	23.1	NO	YES	56	59	1.8	NO	8.4	0.3	STOP	NO	YES	No	N/A	N/A	N/A	N/A	N/A	N/A	0	0	4	4	11	**15**	$ -	$ 100	$ 1,500	$ 375	**$ 1,975**	
77	5/30/2014	N BOISE AVE & MUSSER ST	SE	Medium	YES	YES	N/S	60	8.1	1.9	17.5	24.1	NO	YES	60	60	1.1	NO	7	0.7	STOP	NO	YES	No	N/A	N/A	N/A	N/A	N/A	N/A	0	0	4	4	11	**15**	$ -	$ 100	$ 1,500	$ 375	**$ 1,975**	
80	5/30/2014	N BOISE AVE & BARTON ST	SW	Medium	YES	YES	N/S	52	3.4	0.1	17.7	24	NO

Not Compliant With:	
	ADAAG
	PROWAG
	BOTH

Priority	Number	Costs
High	163	$ 317,050
Medium	254	$ 458,200
Low	95	$ 128,700
Compliant	8	$ -
Total:	**520**	**$ 903,950**

	Location Details						Ramp							Landing				Transition Details					Detectable Warning Surfaces							Priority Score						Correction Costs					
GIS ID	Inspection Date	Crossing Description	Location	Priority	Sidewalk	Curb & Gutter	Ramp Direction	Ramp Width (in)	Running Slope (%)	Cross Slope (%)	Flare Slope A (%)	Flare Slope B (%)	Discontinuities	Landing Provided	Landing Width (in)	Landing Depth (in)	Maximum Slope (%)	Lip Present	Gutter Counter Slope (%)	Gutter Flowline Slope at Ramp (%)	Traffic Control	Marked X-Walk	X-Walk Clear Space	Domes	Depth (in)	Spans Curb Cut	Within 8 inches of Curb Line	Color	Color Contrast	Dome Dimensions are Correct	Number ADAAG	Number PROWAG	Number BOTH	Total Compliance Score	Location Score	**Composite Score**	Cost Add Domes	Cost Remove Existing	Add New Ramp	Modify Curb & Gutter	**Total Cost**	Comment
258	6/9/2014	S JOHNS AVE & E 1ST ST	SW	Medium	YES	YES	E/W	46	5.2	0.1	4.7	4.2	NO	YES	58	70	5.2	NO	7.7	1.9	STOP	YES	YES	No	N/A	N/A	N/A	N/A	N/A	N/A	0	1	3	4	11	**15**	$ -	$ 100	$ 1,500	$ 375	**$ 1,975**	Crossing direction is E/W
259	6/9/2014	S JOHNS AVE & E 1ST ST	SE	Medium	YES	YES	E/W	59	7.2	0.9	N/A	N/A	YES	YES	59	59	1.1	YES	1.6	4.9	STOP	YES	YES	No	N/A	N/A	N/A	N/A	N/A	N/A	0	2	2	4	11	**15**	$ -	$ 100	$ 1,500	$ 375	**$ 1,975**	
265	6/9/2014	E 2ND ST & S MCKINLEY AVE	NE	Medium	YES	YES	E/W	60	4.1	0.4	N/A	N/A	YES	YES	58	58	2.7	YES	3	0.3	STOP	YES	YES	No	N/A	N/A	N/A	N/A	N/A	N/A	0	1	3	4	11	**15**	$ -	$ 100	$ 1,500	$ 375	**$ 1,975**	
270	6/9/2014	E 3RD ST & S MCKINLEY AVE	NE	Medium	YES	YES	E/W	60	3.9	2.5	N/A	N/A	YES	YES	60	60	2.1	NO	1.9	0.6	STOP	YES	YES	No	N/A	N/A	N/A	N/A	N/A	N/A	0	0	4	4	11	**15**	$ -	$ 100	$ 1,500	$ -	**$ 1,600**	
271	6/9/2014	E 3RD ST & S MCKINLEY AVE	NW	Medium	YES	YES	E/W	58	6.1	0.1	N/A	N/A	YES	YES	54	60	1.3	YES	N/A	3	STOP	YES	YES	No	N/A	N/A	N/A	N/A	N/A	N/A	0	2	2	4	11	**15**	$ -	$ 100	$ 1,500	$ 375	**$ 1,975**	
273	6/9/2014	E 3RD ST & S WARDWELL AVE	NE	Medium	YES	YES	E/W	61	10.4	0.8	N/A	N/A	NO	YES	61	60	0.6	NO	10.5	2.4	STOP	YES	YES	No	N/A	N/A	N/A	N/A	N/A	N/A	0	1	3	4	11	**15**	$ -	$ 100	$ 1,500	$ 375	**$ 1,975**	
287	6/9/2014	E 7TH ST & S MCKINLEY AVE	SE	Medium	YES	YES	E/W	70	4	1.4	1.2	1.2	YES	NO	N/A	N/A	N/A	YES	3.6	1.1	STOP	NO	YES	No	N/A	N/A	N/A	N/A	N/A	N/A	0	1	3	4	11	**15**	$ -	$ 100	$ 1,500	$ 375	**$ 1,975**	
305	6/10/2014	E 2ND ST & S BUTTE AVE	SW	Medium	YES	YES	N/S	28	7.9	N/A	9.3	4.8	NO	NO	N/A	N/A	N/A	NO	5.2	1.2	NONE	NO	YES	No	N/A	N/A	N/A	N/A	N/A	N/A	0	0	4	4	11	**15**	$ -	$ 100	$ 1,500	$ 375	**$ 1,975**	
315	6/10/2014	E 4TH ST & S PINE AVE	NE	Medium	YES	YES	N/S	60	5	0.5	N/A	N/A	YES	YES	59	48	0.7	YES	4.1	2.2	STOP	NO	YES	No	N/A	N/A	N/A	N/A	N/A	N/A	0	2	2	4	11	**15**	$ -	$ 100	$ 1,500	$ 375	**$ 1,975**	
317	6/10/2014	E 4TH ST & S BUTTE AVE	NE	Medium	YES	YES	E/W	50	5.1	3.6	N/A	N/A	YES	YES	59	75	4	NO	1.3	1.9	STOP	YES	YES	No	N/A	N/A	N/A	N/A	N/A	N/A	0	0	4	4	11	**15**	$ -	$ 100	$ 1,500	$ -	**$ 1,600**	
327	6/10/2014	E 4TH ST & HAZEL AVE	NW	Medium	YES	YES	E/W	42	1.9	2.8	N/A	N/A	NO	YES	58	75	0.8	NO	3.3	3.9	STOP	YES	YES	No	N/A	N/A	N/A	N/A	N/A	N/A	0	2	2	4	11	**15**	$ -	$ 100	$ 1,500	$ 375	**$ 1,975**	
331	6/10/2014	E 4TH ST & S MCKINLEY AVE	NW	Medium	YES	YES	E/W	58	8.3	0.5	N/A	N/A	NO	YES	58	92	3.7	NO	6.9	2.6	STOP	YES	YES	No	N/A	N/A	N/A	N/A	N/A	N/A	0	1	3	4	11	**15**	$ -	$ 100	$ 1,500	$ 375	**$ 1,975**	
332	6/10/2014	E 4TH ST & S WARDWELL AVE	NE	Medium	YES	YES	E/W	64	14.3	1.5	N/A	N/A	NO	YES	58	57	4.7	YES	3.8	0.6	UNK	UNK	UNK	No	N/A	N/A	N/A	N/A	N/A	N/A	0	1	3	4	11	**15**	$ -	$ 100	$ 1,500	$ 375	**$ 1,975**	
450	6/13/2014	E PARK ST & MAPLE ST	NW	Medium	YES	YES	E/W	60	6.7	0.7	12	10.7	NO	YES	60	60	0.8	YES	3.2	0.4	NONE	NO	YES	No	N/A	N/A	N/A	N/A	N/A	N/A	0	1	3	4	11	**15**	$ -	$ 100	$ 1,500	$ 375	**$ 1,975**	
453	6/13/2014	E PARK ST & N JOHNS AVE	NE	Medium	YES	YES	N/S	57	0.4	2.1	N/A	N/A	YES	YES	57	60	1.6	YES	N/A	N/A	STOP	YES	YES	No	N/A	N/A	N/A	N/A	N/A	N/A	0	1	3	4	11	**15**	$ -	$ 100	$ 1,500	$ 375	**$ 1,975**	GUTTER UNDER RAMP THRU CULVERT
469	6/16/2014	E MAIN ST & EVERGREEN DR	NW	Medium	YES	YES	E/W	55	8.6	1.5	N/A	N/A	NO	YES	54	61	2.5	NO	9.2	0.7	NONE	NO	YES	No	N/A	N/A	N/A	N/A	N/A	N/A	0	0	4	4	11	**15**	$ -	$ 100	$ 1,500	$ 375	**$ 1,975**	Pedestrian complaint, wheel chair drags on ramp
475	6/16/2014	E MAIN ST & S JOHNS AVE	SW	Medium	YES	YES	N/S	34	8.1	2.7	6.4	6.8	NO	YES	48	54	1	NO	8	1.2	STOP	YES	YES	No	N/A	N/A	N/A	N/A	N/A	N/A	0	0	4	4	11	**15**	$ -	$ 100	$ 1,500	$ 375	**$ 1,975**	
478	6/16/2014	E MAIN ST & POST OFFICE ENTRANCE	SE	Medium	YES	YES	E/W	48	6.4	2.9	5	12	NO	YES	48	50	1.7	NO	3.9	3.8	NONE	NO	YES	No	N/A	N/A	N/A	N/A	N/A	N/A	0	1	3	4	11	**15**	$ -	$ 100	$ 1,500	$ 375	**$ 1,975**	
483	6/16/2014	E MAIN ST & S MCKINLEY AVE	SE	Medium	YES	YES	N/S	54	0.4	1.2	N/A	N/A	NO	YES	59	59	3.1	YES	5.3	0.8	STOP	YES	YES	No	N/A	N/A	N/A	N/A	N/A	N/A	0	1	3	4	11	**15**	$ -	$ 100	$ 1,500	$ 375	**$ 1,975**	
484	6/16/2014	E MAIN ST & S MCKINLEY AVE	SE	Medium	YES	YES	E/W	59	1.3	1.4	N/A	N/A	NO	YES	59	59	3.1	YES	8.8	0.8	STOP	YES	YES	No	N/A	N/A	N/A	N/A	N/A	N/A	0	1	3	4	11	**15**	$ -	$ 100	$ 1,500	$ 375	**$ 1,975**	
495	6/16/2014	E MAIN ST & N WARDWELL AVE	NW	Medium	YES	YES	N/S	61	5.8	0.6	N/A	N/A	YES	YES	61	48	1.1	YES	4.1	2.2	STOP	YES	YES	No	N/A	N/A	N/A	N/A	N/A	N/A	0	2	2	4	11	**15**	$ -	$ 100	$ 1,500	$ 375	**$ 1,975**	
497	6/16/2014	E MAIN ST & N WARDWELL AVE	NE	Medium	YES	YES	E/W	55	0.8	0.8	N/A	N/A	YES	YES	60	60	2.9	YES	2.1	0.6	STOP	YES	YES	No	N/A	N/A	N/A	N/A	N/A	N/A	0	1	3	4	11	**15**	$ -	$ 100	$ 1,500	$ 375	**$ 1,975**	
290	6/9/2014	S AMERICAN AVE & E 12TH ST	SE	Medium	YES	YES	E/W	43	4.6	0.5	7.6	4.5	NO	YES	43	43	1.4	NO	5.7	1.4	STOP	YES	YES	No	N/A	N/A	N/A	N/A	N/A	N/A	0	3	2	5	9.5	**14.5**	$ 750	$ -	$ -	$ 375	**$ 1,125**	
291	6/9/2014	S AMERICAN AVE & E 12TH ST	SW	Medium	YES	YES	E/W	39	6.5	0.2	7.3	6.4	NO	YES	39	43	1.7	NO	6.9	0.5	STOP	YES	YES	No	N/A	N/A	N/A	N/A	N/A	N/A	0	3	2	5	9.5	**14.5**	$ 750	$ -	$ -	$ 375	**$ 1,125**	
4	5/28/2014	APACHE ST & COMMANCHE TR	SW	Medium	YES	YES	E/W	38	6.8	N/A	N/A	N/A	NO	YES	38	26	2.9	NO	5.8	1.5	STOP	NO	YES	No	N/A	N/A	N/A	N/A	N/A	N/A	0	2	4	6	8	**14**	$ -	$ 100	$ 1,500	$ 375	**$ 1,975**	
18	5/28/2014	SIOUX & COMMANCHE TRL	NW	Medium	YES	YES	E/W	42	4.7	1.2	8.9	6.3	NO	YES	42	27	2.3	NO	2.8	0.3	STOP	NO	YES	No	N/A	N/A	N/A	N/A	N/A	N/A	0	2	3	5	9	**14**	$ -	$ 100	$ 1,500	$ -	**$ 1,600**	
106	6/2/2014	N BUTTE AVE & SOUTH PARKING LOT ENTRANCE	SE	Medium	YES	YES	N/S	60	8.1	2.1	16.9	8.6	NO	YES	60	68	2.2	NO	5.9	0.7	NONE	NO	YES	No	N/A	N/A	N/A	N/A	N/A	N/A	0	0	5	5	9	**14**	$ -	$ 100	$ 1,500	$ 375	**$ 1,975**	
108	6/2/2014	N BUTTE AVE & NORTH PARKING LOT ENTRANCE	SE	Medium	YES	YES	N/S	48	11.5	1.3	15.4	15.9	NO	YES	60	60	2.6	NO	0.3	1.8	NONE	NO	YES	No	N/A	N/A	N/A	N/A	N/A	N/A	0	0	5	5	9	**14**	$ -	$ 100	$ 1,500	$ -	**$ 1,600**	
228	6/6/2014	S JOHNS AVE & ALBERTSONS PARKING LOT	NE	Medium	YES	YES	N/S	36	4.6	1.3	7.6	9.2	NO	YES	75	22	0.4	NO	1.1	1.2	STOP	NO	YES	No	N/A	N/A	N/A	N/A	N/A	N/A	0	1	2	3	11	**14**	$ -	$ 100	$ 1,500	$ -	**$ 1,600**	
233	6/6/2014	S JOHNS AVE & E 12TH ST	SE	Medium	YES	YES	N/S	40	7.8	1.3	5.1	7	NO	NO	N/A	N/A	N/A	NO	3.2	0.2	STOP	YES	YES	No	N/A	N/A	N/A	N/A	N/A	N/A	0	1	2	3	11	**14**	$ -	$ 100	$ 1,500	$ -	**$ 1,600**	
284	6/9/2014	S HAWTHORNE AVE & E 7TH ST	NW	Medium	YES	YES	E/W	55	5.7	0.3	30.8	26.8	NO	NO	N/A	N/A	N/A	NO	4.6	1.4	STOP	NO	YES	No	N/A	N/A	N/A	N/A	N/A	N/A	0	0	4	4	10	**14**	$ -	$ 100	$ 1,500	$ -	**$ 1,600**	
289	6/9/2014	OLD GLORY WAY & E 7TH ST	NW	Medium	YES	YES	N/S	55	2.2	2.9	N/A	N/A	NO	YES	57	48	3.8	NO	5.3	1.7	STOP	NO	YES	No	N/A	N/A	N/A	N/A	N/A	N/A	0	0	4	4	10	**14**	$ -	$ 100	$ 1,500	$ 375	**$ 1,975**	
358	6/11/2014	E QUAIL RUN RD & PLAZA OFFICE SUITES LOT	SW	Medium	YES	YES	E/W	43	4.7	1.2	7.3	4	NO	YES	41	72	3.6	NO	7.1	1.3	NONE	NO	YES	No	N/A	N/A	N/A	N/A	N/A	N/A	0	2	3	5	9	**14**	$ -	$ 100	$ 1,500	$ 375	**$ 1,975**	
369	6/11/2014	MONARCH ST & PALACE AVE	SE	Medium	YES	YES	E/W	97	7.7	2.5	4.3	6.7	NO	YES	84	34	2.2	NO	6.3	2.7	NONE	NO	YES	No	N/A	N/A	N/A	N/A	N/A	N/A	0	1	5	6	8	**14**	$ -	$ 100	$ 1,500	$ 375	**$ 1,975**	4" Curb w/ sidewalk approach
372	6/11/2014	PRINCESS ST & PALACE AVE	NE	Medium	YES	YES	E/W	96	6.6	3.8	6.1	1.9	NO	YES	80	34	3	NO	8	3.1	NONE	NO	YES	No	N/A	N/A	N/A	N/A	N/A	N/A	0	1	5	6	8	**14**	$ -	$ 100	$ 1,500	$ 375	**$ 1,975**	
383	6/11/2014	PINYON PEAK DR & CRYSTAL CREEK DR	NE	Medium	YES	YES	N/S	89	8.1	3.9	4.3	7.5	NO	YES	72	50	4.6	NO	5.3	2.6	NONE	NO	YES	No	N/A	N/A	N/A	N/A	N/A	N/A	0	1	4	5	9	**14**	$ -	$ 100	$ 1,500	$ 375	**$ 1,975**	
397	6/12/2014	S SUBSTATION RD & E QUAIL RUN RD	NE	Medium	YES	YES	E/W	36	6	1.4	6.8	4.3	NO	YES	36	51	2.6	NO	7.9	0.7	STOP	NO	YES	No	N/A	N/A	N/A	N/A	N/A	N/A	0	2	3	5	9	**14**	$ -	$ 100	$ 1,500	$ 375	**$ 1,975**	
398	6/12/2014	S SUBSTATION RD & E QUAIL RUN RD	NE	Medium	YES	YES	N/S	37	6.2	0.7	6.8	5.4	NO	YES	37	55	3.2	NO	7.7	1.2	STOP	NO	YES	No	N/A	N/A	N/A	N/A	N/A	N/A	0	2	3	5	9	**14**	$ -	$ 100	$ 1,500	$ 375	**$ 1,975**	
402	6/12/2014	S SUBSTATION RD & PLAZA OFFICE SUITES LOT	SE	Medium	YES	YES	N/S	40	4.4	2	3.9	6.2	NO	NO	N/A	N/A	N/A	NO	8.7	2.1	NONE	NO	YES	No	N/A	N/A	N/A	N/A	N/A	N/A	0	2	3	5	9	**14**	$ -	$ 100	$ 1,500	$ 375	**$ 1,975**	
405	6/12/2014	S SUBSTATION RD & FELTHAM PEAK DR	SW	Medium	YES	YES	E/W	50	4.8	3.5	9.9	4.4	NO	YES	66	48	1.5	YES	9.6	3	STOP	YES	YES	No	N/A	N/A	N/A	N/A	N/A	N/A	0	2	3	5	9	**14**	$ -	$ 100	$ 1,500	$ 375	**$ 1,975**	
14	5/28/2014	NAVAJO & S CHEROKEE ST	SE	Medium	YES	YES	N/S	32	7.9	N/A	7.7	7.1	NO	NO	N/A	N/A	N/A	NO	7.2	1.1	STOP	NO	YES	No	N/A	N/A	N/A	N/A	N/A	N/A	0	0	4	4	9.5	**13.5**	$ -	$ 100	$ 1,500	$ 375	**$ 1,975**	
31	5/29/2014	W 4TH ST & MCAULIFFE AVE	NE	Medium	YES	YES	N/S	48	10.7	2.2	9	5.3	NO	NO	N/A	N/A	N/A	NO	5.1	1.4	STOP	NO	YES	No	N/A	N/A	N/A	N/A	N/A	N/A	0	0	5	5	8.5	**13.5**	$ -	$ 100	$ 1,500	$ 375	**$ 1,975**	
34	5/29/2014	W MAIN ST & MCAULIFFE AVE	SW	Medium	YES	YES	E/W	40	6.5	0.3	8.3	2.9	NO	NO	N/A	N/A	N/A	NO	5.9	0	STOP	YES	YES	No	N/A	N/A	N/A	N/A	N/A	N/A	0	1	3	4	9.5	**13.5**	$ -	$ 100	$ 1,500	$ 375	**$ 1,975**	
35	5/29/2014	W MAIN ST & MCAULIFFE AVE	SE	Medium	YES	YES	E/W	34	5.5	0.1	5.7	7.5	NO	NO	N/A	N/A	N/A	NO	8.1	0.5	STOP	YES	YES	No	N/A	N/A	N/A	N/A	N/A	N/A	0	0	4	4	9.5	**13.5**	$ -	$ 100	$ 1,500	$ 375	**$ 1,975**	
36	5/29/2014	W 2ND ST & WILSON AVE	SW	Medium	YES	YES	E/W	48	6.8	2.4	5.7	10.4	NO	NO	N/A	N/A	N/A	NO	5.7	2	NONE	NO	YES	YES	24	YES	YES	YELLOW	YES	YES	0	0	4	4	9.5	**13.5**	$ -	$ 100	$ 1,500	$ 375	**$ 1,975**	No landing - utility pole where landing should be
39	5/29/2014	W MAIN ST & W 1ST ST	SE	Medium	YES	YES	E/W	31	6.3	0.5	7.2	7.5	NO	NO	N/A	N/A	N/A	NO	6.3	0.2	STOP	YES	YES	No	N/A	N/A	N/A	N/A	N/A	N/A	0	0	4	4	9.5	**13.5**	$ -	$ 100	$ 1,500	$ 375	**$ 1,975**	
42	5/29/2014	W MAIN ST & WILSON AVE	SE	Medium	YES	YES	E/W	36	4.9	1	5.2	6.3	NO	NO	N/A	N/A	N/A	NO	5.7	0.5	STOP	YES	YES	No	N/A	N/A	N/A	N/A	N/A	N/A	0	1	3	4	9.5	**13.5**	$ -	$ 100	$ 1,500	$ 375	**$ 1,975**	
43	5/29/2014	W 12TH ST & S CHEROKEE AVE	NW	Medium	YES	YES	E/W	27	5.9	N/A	6.2	7.3	NO	NO	N/A	N/A	N/A	NO	6.1	0.5	STOP	YES	YES	No	N/A	N/A	N/A	N/A	N/A	N/A	0	0	4	4	9.5	**13.5**	$ -	$ 100	$ 1,500	$ 375	**$ 1,975**	
50	5/29/2014	WILLIAMS RD & JADE PL	NE	Medium	YES	YES	N/S	44	5	1.8	6.2	3.7	NO	NO	N/A	N/A	N/A	NO	5.1	2.9	STOP	NO	YES	No	N/A	N/A	N/A	N/A	N/A	N/A	0	2	3	5	8.5	**13.5**	$ -	$ 100	$ 1,500	$ 375	**$ 1,975**	
112	6/2/2014	N MOFFATT AVE & FERNLEE ST	SW	Medium	YES	YES	N/S	35	8.8	N/A	7.8	6.7	NO	NO	N/A	N/A	N/A	NO	0.5	0.8	NONE	NO	YES	No	N/A	N/A	N/A	N/A	N/A	N/A	0	0	4	4	9.5	**13.5**	$ -	$ 100	$ 1,500	$ -	**$ 1,600**	
443	6/13/2014	N PINE AVE & E BLAINE ST	NE	Medium	YES	YES	N/S	60	4.2	0.3	10.3	2.7	NO	NO	N/A	N/A	N/A	YES	N/A	0.4	STOP	NO	YES	No	N/A	N/A	N/A	N/A	N/A	N/A	0	1	3	4	9.5	**13.5**	$ -	$ 100	$ 1,500	$ 375	**$ 1,975**	
458	6/16/2014	E MAIN ST & ERICKSON AVE	SE	Medium	YES	YES	E/W	48	6.5	1.1	14.6	13.7	NO	NO	N/A		N/A	NO	7	1.7	STOP	NO	YES	No	N/A	N/A	N/A	N/A	N/A	N/A	0	0	5	5	8.5	**13.5**	$ -	$ 100	$ 1,500	$ 375	**$ 1,975**	
57	5/29/2014	N COMMERCIAL ST & BARTON ST	NE	Medium	YES	YES	E/W	58	8.1	0.3	34.9	29.2	NO	YES	58	60	2.4	NO	3.2	0	STOP	NO	YES	No	N/A	N/A	N/A	N/A	N/A	N/A	0	0	4	4	9	**13**	$ -	$ 100	$ 1,500	$ -	**$ 1,600**	6" Curb w/ crosswalk approach
58	5/29/2014	N COMMERCIAL ST & BARTON ST	NW	Medium	YES	YES	E/W	60	8.8	1.1	32	30	NO	YES	60	60	1.4	NO	4.4	0.9	STOP	NO	YES	No	N/A	N/A	N/A	N/A	N/A	N/A	0	0	4	4	9	**13**	$ -	$ 100	$ 1,500	$ -	**$ 1,600**	
59	5/29/2014	N COMMERCIAL ST & BARTON ST	SE	Medium	YES	YES	N/S	60	9.3	0.8	36.9	20.1	NO	YES	60	60	1.4	NO	3.3	0.4	STOP	NO	YES	No	N/A	N/A	N/A	N/A	N/A	N/A	0	0	4	4	9	**13**	$ -	$ 100	$ 1,500	$ -	**$ 1,600**	
62	5/29/2014	MUSSER ST & N COMMERCIAL ST	SW	Medium	YES	YES	N/S	58	3.8	0.9	21.4	23.1	NO	YES	58	60	1.8	NO	1	0.2	STOP	NO	YES	No	N/A	N/A	N/A	N/A	N/A	N/A	0	0	3	3	10	**13**	$ -	$ 100	$ 1,500	$ -	**$ 1,600**	
64	5/29/2014	DION ST & N COMMERCIAL ST	NE	Medium	YES	YES	N/S	60	6.7	0.7	15.2	20.9	NO	YES	60	56	0.8	NO	4.6	2	STOP	NO	YES	No	N/A	N/A	N/A	N/A	N/A	N/A	0	0	3	3	10	**13**	$ -	$ 100	$ 1,500	$ -	**$ 1,600**	
69	5/29/2014	N COMMERCIAL ST & CANAL ST	NE	Medium	YES	YES	N/S	60	5.3	2.6	7.3	9.3	NO	YES	56	58	2.4	NO	5.8	0.3	STOP	NO	YES	YES	24	YES	YES	YELLOW	YES	YES	0	0	3	3	10	**13**	$ -	$ 100	$ 1,500	$ 375	**$ 1,975**	6" Curb w/ crosswalk approach
70	5/30/2014	N BOISE AVE & DION ST	SW	Medium	YES	YES	N/S	50	4.4	1.9	30.6	33.5	NO	YES	50	62	0.4	NO	5	0.1	NONE	NO	YES	No	N/A	N/A	N/A	N/A	N/A	N/A	0	0	3	3	10	**13**	$ -	$ 100	$ 1,500	$ -	**$ 1,600**	
75	5/30/2014	N BOISE AVE & DION ST	NW	Medium	YES	YES	N/S	58	6	0.1	28.4	26.7	NO	YES	58	51	0.5	NO	5	1.9	NONE	NO	YES	No	N/A	N/A	N/A	N/A	N/A	N/A	0	0	3	3	10	**13**	$ -	$ 100	$ 1,500	$ -	**$ 1,600**	
78	5/30/2014	N BOISE AVE & MUSSER ST	NE	Medium	YES	YES	N/S	58	6	1.8	22.7	25.7	NO	YES	58	80	1.5	NO	4.8	0.3	STOP	NO	YES	No	N/A	N/A	N/A	N/A	N/A	N/A	0	0	3	3	10	**13**	$ -	$ 100	$ 1,500	$ -	**$ 1,600**	
82	5/30/2014	N BOISE AVE & BARTON ST	NE	Medium	YES	YES	N/S	57	7.5	1.6	21.6	26	NO	YES	57	60	0.8	NO	6.4	0.3	NONE	NO	YES	No	N/A	N/A	N/A	N/A	N/A	N/A	0	0	4	4	9	**13**	$ -	$ 100	$ 1,500	$ 375	**$ 1,975**	
83	5/30/2014	DION ST & N HAYES AVE	NE	Medium	YES	YES	E/W	51	1.9	2.4	N/A	N/A	NO	YES	51	61	2.4	NO	0.7	1.4	NONE	NO	YES	No	N/A	N/A	N/A	N/A	N/A	N/A	0	0	3	3	10	**13**	$ -	$ 100	$ 1,500	$ -	**$ 1,600**	
90	5/30/2014	DEWEY ST & PARKING LOT (1)	NW	Medium	YES	YES	E/W	53	6.8	3	N/A	N/A	NO	YES	60	58	2.2	NO	4.7	0.7	NONE	NO	YES	No	N/A	N/A	N/A	N/A	N/A	N/A	0	0	3	3	10	**13**	$ -	$ 100	$ 1,500	$ -	**$ 1,600**	
119	6/2/2014	MURRAY AVE & W 2ND ST	SW	Medium	YES	YES	N/S	48	5.6	0	N/A	N/A	NO	YES	64	58	3.5	NO	6.4	3.3	NONE	NO	YES	YES	24	YES	YES	YELLOW	YES	YES	0	1	2	3	10	**13**	$ -	$ 100	$ 1,500	$ 375	**$ 1,975**	
120	6/2/2014	MURRAY AVE & W 2ND ST	NW	Medium	YES	YES	N/S	59	7.8	0.2	9	7.9	NO	YES	60	60	2.1	NO	5.5	0.9	NONE	NO	YES	No	N/A	N/A	N/A	N/A	N/A	N/A	0	0	3	3	10	**13**	$ -	$ 100	$ 1,500	$ 375	**$ 1,975**	
141	6/3/2014	S COMMERCIAL AVE & 6TH ST	SW	Medium	YES	NO	N/S	60	1.4	0.3	N/A	N/A	YES	YES	60	54	1.4	YES	1.5	0.9	NONE	NO	YES	No	N/A	N/A	N/A	N/A	N/A	N/A	0	1	2	3	10	**13**	$ -	$ 100	$ 1,500	$ 375	**$ 1,975**	
155	6/4/2014	S COMMERCIAL AVE & W 3RD ST	SE	Medium	YES	YES	E/W	55	5.8	0.4	16.8	14.2	NO	YES	60	59	1.2	NO	3	0.2	STOP	YES	YES	No	N/A	N/A	N/A	N/A	N/A	N/A	0	0	3	3	10	**13**	$ -	$ 100	$ 1,500	$ -	**$ 1,600**	
156	6/4/2014	S COMMERCIAL AVE & W 3RD ST	SE	Medium	YES	YES	N/S	60	4.4	1.3	17.4	13	NO	YES	59	60	1.2	NO	1.9	1.7	STOP	YES	YES	No	N/A	N/A	N/A	N/A	N/A	N/A	0	0	3	3	10	**13**	$ -	$ 100	$ 1,500	$ -	**$ 1,600**	
161	6/4/2014	S COMMERCIAL AVE & W 2ND ST	SW	Medium	YES	YES	E/W	58	8.3	0.2	N/A	N/A	YES	YES	58	58	0.3	NO	6.6	1.2	STOP	YES	YES	No	N/A	N/A	N/A	N/A	N/A	N/A	0	0	3	3	10	**13**	$ -	$ 100	$ 1,500	$ 375	**$ 1,975**	
164	6/4/2014	S COMMERCIAL AVE & W 2ND ST	NE	Medium	YES	YES	N/S	60	1.2	0	N/A	N/A	YES	YES	60	48	1.2	YES	N/A	0.3	STOP	YES	YES	No	N/A	N/A	N/A	N/A	N/A	N/A	0	1	2	3	10	**13**	$ -	$ 100	$ 1,500	$ 375	**$ 1,975**	
166	6/4/2014	S COMMERCIAL AVE & W 1ST ST	SW	Medium	YES	YES	N/S	50	3.6	1.7	N/A	N/A	YES	YES	56	54	3.4	NO	4.9	1.3	NONE	YES	YES	No	N/A	N/A	N/A	N/A	N/A	N/A	0	0	3	3	10	**13**	$ -	$ 100	$ 1,500	$ -	**$ 1,600**	3" Curb w/ sidewalk approach
168	6/4/2014	S COMMERCIAL AVE & W 1ST ST	NW	Medium	YES	YES	E/W	60	7.5	0.7	N/A	N/A	NO	YES	59	70	0.7	YES	3.4	2.4	NONE	YES	YES	No	N/A	N/A	N/A	N/A	N/A	N/A	0	2	1	3	10	**13**	$ -	$ 100	$ 1,500	$ 375	**$ 1,975**	
177	6/4/2014	S HAYES AVE & E 4TH ST	SE	Medium	YES	YES	N/S	48	3.6	2.2	6.7	2.5	NO	YES	48	68	5.5	NO	3.6	1.6	STOP	YES	YES	No	N/A	N/A	N/A	N

Not Compliant With:	
	ADAAG
	PROWAG
	BOTH

Priority	Number	Costs
High	163	$ 317,050
Medium	254	$ 458,200
Low	95	$ 128,700
Compliant	8	$ -
Total:	520	$ 903,950

	Location Details						Ramp							Landing				Transition Details						Detectable Warning Surfaces							Priority Score						Correction Costs					
GIS ID	Inspection Date	Crossing Description	Location	Priority	Sidewalk	Curb & Gutter	Ramp Direction	Ramp Width (in)	Running Slope (%)	Cross Slope (%)	Flare Slope A (%)	Flare Slope B (%)	Discontinuities	Landing Provided	Landing Width (in)	Landing Depth (in)	Maximum Slope (%)	Lip Present	Gutter Counter Slope (%)	Gutter Flowline Slope at Ramp (%)	Traffic Control	Marked X-Walk	X-Walk Clear Space	Domes	Depth (in)	Spans Curb Cut	Within 8 inches of Curb Line	Color	Color Contrast	Dome Dimensions are Correct	Number ADAAG	Number PROWAG	Number BOTH	Total Compliance Score	Location Score	**Composite Score**	Cost Add Domes	Cost Remove Existing	Add New Ramp	Modify Curb & Gutter	**Total Cost**	Comment
456	6/13/2014	W PARK ST & N COMMECIAL AVE	NE	Medium	YES	YES	N/S	60	1.1	3.1	N/A	N/A	NO	YES	60	75	4	NO	N/A	N/A	NONE	NO	YES	No	N/A	N/A	N/A	N/A	N/A	N/A	0	0	3	3	10	**13**	$ -	$ 100	$ 1,500	$ 375	**$ 1,975**	
470	6/16/2014	E MAIN ST & EVERGREEN DR	NE	Medium	YES	YES	E/W	60	7.5	0.2	N/A	N/A	NO	YES	57	53	2.1	NO	11.4	0.5	STOP	NO	YES	No	N/A	N/A	N/A	N/A	N/A	N/A	0	0	3	3	10	**13**	$ -	$ 100	$ 1,500	$ 375	**$ 1,975**	Pedestrian complaint, wheel chair drags on ramp
471	6/16/2014	E MAIN ST & N JOHNS AVE	NW	Medium	YES	YES	E/W	54	6.5	2.2	N/A	N/A	NO	YES	57	48	0.6	YES	2.2	1.6	STOP	YES	YES	No	N/A	N/A	N/A	N/A	N/A	N/A	0	1	2	3	10	**13**	$ -	$ 100	$ 1,500	$ 375	**$ 1,975**	
485	6/16/2014	E MAIN ST & S MCKINLEY AVE	SW	Medium	YES	YES	E/W	60	5.6	2.5	N/A	N/A	NO	YES	61	60	1.5	NO	0	2.8	STOP	YES	YES	No	N/A	N/A	N/A	N/A	N/A	N/A	0	1	2	3	10	**13**	$ -	$ 100	$ 1,500	$ 375	**$ 1,975**	
487	6/16/2014	E MAIN ST & N MCKINLEY AVE	NW	Medium	YES	YES	N/S	59	7.4	0.9	8.2	6.2	NO	YES	59	70	1.6	YES	14.8	1.3	STOP	YES	YES	No	N/A	N/A	N/A	N/A	N/A	N/A	0	1	2	3	10	**13**	$ 750	$ -	$ -	$ 375	**$ 1,125**	
488	6/16/2014	E MAIN ST & N MCKINLEY AVE	NW	Medium	YES	YES	E/W	70	9.6	0.2	7.9	9.5	NO	YES	70	59	1.6	NO	9.3	0.4	STOP	YES	YES	No	N/A	N/A	N/A	N/A	N/A	N/A	0	0	3	3	10	**13**	$ -	$ 100	$ 1,500	$ 375	**$ 1,975**	
491	6/16/2014	E MAIN ST & S WARDWELL AVE	SE	Medium	YES	YES	N/S	58	4.3	1.2	N/A	N/A	NO	YES	65	60	3.9	YES	1.9	0.8	STOP	YES	YES	No	N/A	N/A	N/A	N/A	N/A	N/A	0	1	2	3	10	**13**	$ -	$ 100	$ 1,500	$ 375	**$ 1,975**	
492	6/16/2014	E MAIN ST & S WARDWELL AVE	SE	Medium	YES	YES	E/W	59	3.5	0.3	N/A	N/A	YES	YES	60	65	3.9	NO	2.1	0.7	STOP	YES	YES	No	N/A	N/A	N/A	N/A	N/A	N/A	0	0	3	3	10	**13**	$ -	$ 100	$ 1,500	$ -	**$ 1,600**	
494	6/16/2014	E MAIN ST & S WARDWELL AVE	SW	Medium	YES	YES	N/S	59	5.9	0.6	N/A	N/A	YES	YES	59	72	1.5	YES	2.4	0.5	STOP	YES	YES	No	N/A	N/A	N/A	N/A	N/A	N/A	0	1	2	3	10	**13**	$ -	$ 100	$ 1,500	$ 375	**$ 1,975**	
520	6/16/2015	E MAIN ST & EVERGREEN DR	NE	Medium	YES	YES	E/W	60	7.7	4.5	N/A	N/A	NO	YES	54	48	1.4	NO	11.4	0.5	STOP	NO	YES	No	N/A	N/A	N/A	N/A	N/A	N/A	0	0	3	3	10	**13**	$ -	$ 100	$ 1,500	$ 375	**$ 1,975**	
1	5/28/2014	APACHE ST & MILL RD	SE	Medium	YES	YES	N/S	45	8.1	2.1	7.6	5	NO	YES	45	26	2	NO	4	0.5	STOP	NO	YES	No	N/A	N/A	N/A	N/A	N/A	N/A	0	2	3	5	7	**12**	$ -	$ 100	$ 1,500	$ -	**$ 1,600**	
3	5/28/2014	APACHE ST & COMMANCHE TR	SE	Medium	YES	YES	E/W	43	4.1	2.3	6.4	4.5	NO	YES	43	28	1.1	NO	1.5	1.2	STOP	NO	YES	No	N/A	N/A	N/A	N/A	N/A	N/A	0	2	3	5	7	**12**	$ -	$ 100	$ 1,500	$ -	**$ 1,600**	
5	5/28/2014	APACHE ST & SIOUX	SW	Medium	YES	YES	E/W	42	7.5	N/A	5.7	5.3	NO	YES	42	25	3.4	NO	0.5	2	STOP	NO	YES	No	N/A	N/A	N/A	N/A	N/A	N/A	0	2	3	5	7	**12**	$ -	$ 100	$ 1,500	$ -	**$ 1,600**	
6	5/28/2014	APACHE ST & SIOUX	SE	Medium	YES	YES	E/W	45	6.8	0.9	7.5	7.1	NO	YES	45	23	1.8	NO	1.4	2.4	STOP	NO	YES	No	N/A	N/A	N/A	N/A	N/A	N/A	0	3	2	5	7	**12**	$ -	$ 100	$ 1,500	$ 375	**$ 1,975**	
110	6/2/2014	N BUTTE & PARKING LOT	SW	Medium	YES	YES	N/S	59	10.9	2.5	N/A	N/A	YES	YES	59	82	2	NO	N/A	N/A	NONE	NO	YES	No	N/A	N/A	N/A	N/A	N/A	N/A	0	0	4	4	8	**12**	$ -	$ 100	$ 1,500	$ 375	**$ 1,975**	
111	6/2/2014	N BUTTE AVE & CIRCLED LOT	SE	Medium	YES	YES	N/S	64	6.2	1	13.3	12.4	NO	YES	64	48	3.4	NO	2	1.5	NONE	NO	YES	No	N/A	N/A	N/A	N/A	N/A	N/A	0	0	4	4	8	**12**	$ -	$ 100	$ 1,500	$ -	**$ 1,600**	
240	6/6/2014	S JOHNS AVE & E 7TH ST	NW	Medium	YES	YES	N/S	48	8.3	0.2	4.3	2.2	NO	NO	N/A	N/A	N/A	NO	5.3	0	STOP	NO	YES	No	N/A	N/A	N/A	N/A	N/A	N/A	0	0	3	3	9	**12**	$ -	$ 100	$ 1,500	$ 375	**$ 1,975**	
286	6/9/2014	E 7TH ST & S MCKINLEY AVE	SW	Medium	YES	YES	E/W	48	3.2	0.5	N/A	N/A	NO	NO	N/A	N/A	N/A	NO	6.4	0.9	STOP	NO	YES	No	N/A	N/A	N/A	N/A	N/A	N/A	0	0	3	3	9	**12**	$ -	$ 100	$ 1,500	$ 375	**$ 1,975**	
346	6/11/2014	MID MIMOSA LN	N	Medium	YES	YES	N/S	44	7.7	0.5	5.1	4.5	NO	YES	44	36	1.3	NO	5.3	0.1	NONE	NO	YES	No	N/A	N/A	N/A	N/A	N/A	N/A	0	3	2	5	7	**12**	$ 750	$ -	$ -	$ 375	**$ 1,125**	
360	6/11/2014	E QUAIL RUN RD & ALBERTA AVE	NW	Medium	YES	YES	E/W	37	8.3	N/A	7.5	5	NO	YES	32	43	2.4	NO	5	1.5	STOP	NO	YES	No	N/A	N/A	N/A	N/A	N/A	N/A	0	2	3	5	7	**12**	$ -	$ 100	$ 1,500	$ -	**$ 1,600**	
363	6/11/2014	E QUAIL RUN RD & REGENCY WAY	SW	Medium	YES	YES	E/W	36	5.5	1.6	5.3	5.9	NO	YES	36	54	2.5	NO	7	0.4	STOP	NO	YES	No	N/A	N/A	N/A	N/A	N/A	N/A	0	2	3	5	7	**12**	$ -	$ 100	$ 1,500	$ 375	**$ 1,975**	
365	6/11/2014	E QUAIL RUN RD & REGENCY WAY	SE	Medium	YES	YES	N/S	41	4.3	N/A	7.5	2.6	NO	YES	41	48	1.5	NO	6	2.7	STOP	NO	YES	No	N/A	N/A	N/A	N/A	N/A	N/A	0	3	2	5	7	**12**	$ -	$ 100	$ 1,500	$ 375	**$ 1,975**	
371	6/11/2014	PRINCESS ST & ROYALTY AVE	SW	Medium	YES	YES	N/S	88	7	5.4	8.5	1.8	NO	YES	77	45	5.5	NO	3	4.7	NONE	NO	YES	No	N/A	N/A	N/A	N/A	N/A	N/A	0	2	3	5	7	**12**	$ -	$ 100	$ 1,500	$ 375	**$ 1,975**	
373	6/11/2014	PRINCESS ST & PALACE AVE	NW	Medium	YES	YES	E/W	104	5.7	2	1.2	7.8	NO	YES	88	37	3.5	NO	7.8	2.1	NONE	NO	YES	No	N/A	N/A	N/A	N/A	N/A	N/A	0	2	3	5	7	**12**	$ -	$ 100	$ 1,500	$ 375	**$ 1,975**	
375	6/11/2014	PRINCESS ST & REGENCY WAY	SE	Medium	YES	YES	N/S	103	8.3	0.1	4.7	3.5	YES	YES	90	40	2.8	NO	5.2	0.3	NONE	NO	YES	No	N/A	N/A	N/A	N/A	N/A	N/A	0	1	4	5	7	**12**	$ -	$ 100	$ 1,500	$ 375	**$ 1,975**	
376	6/11/2014	FELTHAM PEAK DR & PARKING LOT	SW	Medium	YES	YES	E/W	60	3.3	1.1	N/A	N/A	NO	YES	60	59	2.4	NO	2.1	4.2	NONE	NO	YES	No	N/A	N/A	N/A	N/A	N/A	N/A	0	1	3	4	8	**12**	$ -	$ 100	$ 1,500	$ 375	**$ 1,975**	2" Drop off onto roadway
378	6/11/2014	VANITY PEAK DR & FELTHAM PEAK DR	SW	Medium	YES	YES	E/W	31	6.4	N/A	8.8	5.8	YES	YES	31	48	1.8	NO	4.7	1.7	NONE	NO	YES	No	N/A	N/A	N/A	N/A	N/A	N/A	0	0	4	4	8	**12**	$ -	$ 100	$ 1,500	$ -	**$ 1,600**	
379	6/11/2014	VANITY PEAK DR & FELTHAM PEAK DR	SE	Medium	YES	YES	E/W	120	5.9	1.3	6.1	5.6	NO	YES	120	39	2	YES	5.7	0.3	NONE	NO	YES	No	N/A	N/A	N/A	N/A	N/A	N/A	0	2	2	4	8	**12**	$ 750	$ -	$ -	$ 375	**$ 1,125**	
380	6/11/2014	PINYON PEAK DR & CRYSTAL CREEK DR	NW	Medium	YES	YES	N/S	101	8.9	2.8	4.5	4.8	NO	YES	84	51	3.2	NO	4.6	1.8	NONE	NO	YES	No	N/A	N/A	N/A	N/A	N/A	N/A	0	0	4	4	8	**12**	$ -	$ 100	$ 1,500	$ -	**$ 1,600**	
381	6/11/2014	PINYON PEAK DR & CRYSTAL CREEK DR	SW	Medium	YES	YES	N/S	100	7.7	1.7	8.2	5.5	NO	YES	82	32	2.1	NO	2.3	2.1	NONE	NO	YES	No	N/A	N/A	N/A	N/A	N/A	N/A	0	1	3	4	8	**12**	$ -	$ 100	$ 1,500	$ 375	**$ 1,975**	
382	6/11/2014	PINYON PEAK DR & CRYSTAL CREEK DR	SE	Medium	YES	YES	N/S	99	8	0.2	11.1	6.5	NO	YES	82	45	4.2	NO	0.4	0.7	NONE	NO	YES	No	N/A	N/A	N/A	N/A	N/A	N/A	0	1	3	4	8	**12**	$ -	$ 100	$ 1,500	$ -	**$ 1,600**	
384	6/11/2014	CRYSTAL CREEK DR LOOP ENTRANCE	SW	Medium	YES	YES	E/W	120	7.7	2.7	9.4	3.5	NO	YES	100	51	4.7	NO	4	2.3	NONE	NO	YES	No	N/A	N/A	N/A	N/A	N/A	N/A	0	1	3	4	8	**12**	$ -	$ 100	$ 1,500	$ 375	**$ 1,975**	Danger: 6" Curb w/ xwalk approach & 3" gutter lip onto roadway
385	6/12/2014	GEMSTONE WAY & STONE DR	NE	Medium	YES	YES	N/S	73	9.1	0.6	1.4	6.4	NO	YES	63	37	1.7	NO	5.4	0.6	STOP	NO	YES	No	N/A	N/A	N/A	N/A	N/A	N/A	0	1	3	4	8	**12**	$ -	$ 100	$ 1,500	$ 375	**$ 1,975**	
386	6/12/2014	GEMSTONE WAY & STONE DR	SE	Medium	YES	YES	N/S	94	7	2.3	6.2	2	NO	YES	78	46	1.6	NO	5.1	1.9	STOP	NO	YES	No	N/A	N/A	N/A	N/A	N/A	N/A	0	1	3	4	8	**12**	$ -	$ 100	$ 1,500	$ 375	**$ 1,975**	
387	6/12/2014	GEMSTONE WAY & 10TH ST	NE	Medium	YES	YES	N/S	54	6.9	1.1	3.1	2.9	YES	YES	44	42	0.6	NO	4.9	0.4	NONE	NO	YES	No	N/A	N/A	N/A	N/A	N/A	N/A	0	2	2	4	8	**12**	$ 750	$ -	$ -	$ -	**$ 750**	Ramp destroyed
391	6/12/2014	MID S BEAVER CREEK WAY	E	Medium	YES	YES	E/W	128	4.7	0.1	4.3	3.2	NO	YES	122	47	1.6	YES	9.4	0.4	NONE	NO	YES	No	N/A	N/A	N/A	N/A	N/A	N/A	0	2	2	4	8	**12**	$ 750	$ -	$ -	$ 375	**$ 1,125**	
393	6/12/2014	FELTHAM PEAK DR & S PROSPECT WAY	NE	Medium	YES	YES	N/S	117	8.2	1.8	5	7.9	NO	YES	1.6	49	2.9	NO	10.4	1.5	STOP	NO	YES	No	N/A	N/A	N/A	N/A	N/A	N/A	0	0	4	4	8	**12**	$ -	$ 100	$ 1,500	$ 375	**$ 1,975**	
399	6/12/2014	S SUBSTATION RD & E QUAIL RUN RD	SE	Medium	YES	YES	N/S	39	6.4	N/A	7	6	NO	NO	N/A	N/A	N/A	NO	7.8	2	STOP	NO	YES	No	N/A	N/A	N/A	N/A	N/A	N/A	0	1	3	4	8	**12**	$ -	$ 100	$ 1,500	$ 375	**$ 1,975**	
400	6/12/2014	S SUBSTATION RD & E QUAIL RUN RD	SE	Medium	YES	YES	E/W	37	6.4	0.7	5.6	5.3	NO	NO	N/A	N/A	N/A	NO	5.1	0.2	STOP	NO	YES	No	N/A	N/A	N/A	N/A	N/A	N/A	0	1	3	4	8	**12**	$ -	$ 100	$ 1,500	$ 375	**$ 1,975**	
401	6/12/2014	S SUBSTATION RD & PLAZA OFFICE SUITES LOT	NE	Medium	YES	YES	N/S	50	4.6	2.6	6.7	2.4	NO	NO	N/A	N/A	N/A	NO	7.4	1.6	NONE	NO	YES	No	N/A	N/A	N/A	N/A	N/A	N/A	0	0	4	4	8	**12**	$ -	$ 100	$ 1,500	$ 375	**$ 1,975**	
404	6/12/2014	S SUBSTATION RD & FELTHAM PEAK DR	SE	Medium	YES	YES	N/S	31	7.3	N/A	8.8	8.7	NO	YES	31	48	5.4	NO	2.5	0.1	STOP	YES	YES	No	N/A	N/A	N/A	N/A	N/A	N/A	0	0	4	4	8	**12**	$ -	$ 100	$ 1,500	$ -	**$ 1,600**	
406	6/12/2014	S SUBSTATION RD & FELTHAM PEAK DR	SW	Medium	YES	YES	N/S	50	7.9	1.6	9.8	3.8	NO	YES	57	48	4.7	NO	10.5	2.4	STOP	NO	YES	No	N/A	N/A	N/A	N/A	N/A	N/A	0	1	3	4	8	**12**	$ -	$ 100	$ 1,500	$ 375	**$ 1,975**	
407	6/12/2014	S SUBSTATION RD & FELTHAM PEAK DR	NW	Medium	YES	YES	N/S	50	6.1	3.1	7.5	6.5	NO	YES	50	58	3.9	NO	8.9	0.5	STOP	NO	YES	No	N/A	N/A	N/A	N/A	N/A	N/A	0	0	4	4	8	**12**	$ -	$ 100	$ 1,500	$ 375	**$ 1,975**	
411	6/12/2014	S SUBSTATION RD & ELEMENTARY SCHOOL LOT (SOUTH)	NW	Medium	YES	YES	N/S	36	5.1	1	6.8	4.6	NO	YES	48	48	2.5	NO	5.5	1.6	NONE	NO	YES	No	N/A	N/A	N/A	N/A	N/A	N/A	0	1	3	4	8	**12**	$ -	$ 100	$ 1,500	$ 375	**$ 1,975**	
419	6/12/2014	E 12TH ST & REGENCY WAY	NW	Medium	YES	YES	E/W	50	8.7	0.3	10.6	N/A	NO	YES	50	61	3.3	NO	7.1	1.9	STOP	NO	YES	No	N/A	N/A	N/A	N/A	N/A	N/A	0	0	5	5	7	**12**	$ -	$ 100	$ 1,500	$ 375	**$ 1,975**	
423	6/12/2014	E 12TH ST & S SUBSTATION RD	NE	Medium	YES	YES	E/W	34	5.9	0.2	5.7	7.5	NO	NO	N/A	N/A	N/A	NO	11.8	0.9	STOP	YES	YES	No	N/A	N/A	N/A	N/A	N/A	N/A	0	0	4	4	8	**12**	$ -	$ 100	$ 1,500	$ 375	**$ 1,975**	
424	6/12/2014	E 12TH ST & S SUBSTATION RD	NW	Medium	YES	YES	E/W	36	4.7	N/A	10	6.7	NO	YES	48	48	2.1	NO	7.4	1.8	STOP	YES	YES	No	N/A	N/A	N/A	N/A	N/A	N/A	0	1	3	4	8	**12**	$ -	$ 100	$ 1,500	$ 375	**$ 1,975**	
428	6/12/2014	E 12TH ST & ELEMENTARY SCHOOL LOT (EAST)	NW	Medium	YES	YES	E/W	35	2.7	0.3	8.2	4.3	YES	YES	48	48	0.2	NO	5.3	1.6	NONE	NO	YES	No	N/A	N/A	N/A	N/A	N/A	N/A	0	0	4	4	8	**12**	$ -	$ 100	$ 1,500	$ 375	**$ 1,975**	
430	6/12/2014	E 12TH ST & ELEMENTARY SCHOOL LOT (WEST)	NW	Medium	YES	YES	E/W	36	3	0.4	6.3	7.2	NO	YES	75	48	2.1	NO	5.6	0.4	NONE	NO	YES	No	N/A	N/A	N/A	N/A	N/A	N/A	0	1	3	4	8	**12**	$ -	$ 100	$ 1,500	$ 375	**$ 1,975**	
11	5/28/2014	APACHE ST & S. PAWNEE	SE	Medium	YES	YES	E/W	53	5.7	2.8	8.3	2.9	NO	NO	N/A	N/A	N/A	NO	0.4	2.2	NONE	NO	YES	No	N/A	N/A	N/A	N/A	N/A	N/A	0	1	3	4	7.5	**11.5**	$ -	$ 100	$ 1,500	$ 375	**$ 1,975**	Gravel rampway
12	5/28/2014	APACHE ST & S. PAWNEE	SW	Medium	YES	YES	E/W	55	5.7	3.4	6.9	5.8	NO	YES	55	35	0.7	NO	6.6	1	NONE	NO	YES	No	N/A	N/A	N/A	N/A	N/A	N/A	0	0	4	4	7.5	**11.5**	$ -	$ 100	$ 1,500	$ 375	**$ 1,975**	
13	5/28/2014	NAVAJO & S CHEROKEE ST	NE	Medium	YES	YES	N/S	30	0	N/A	7.2	6.2	NO	NO	N/A	N/A	N/A	NO	4.2	0.5	STOP	NO	YES	No	N/A	N/A	N/A	N/A	N/A	N/A	0	0	3	3	8.5	**11.5**	$ -	$ 100	$ 1,500	$ -	**$ 1,600**	
16	5/28/2014	COMMANCHE & CHEROKEE	NW	Medium	YES	YES	N/S	50	4.3	1.5	3.6	5.4	NO	YES	50	36	2.9	NO	2.8	0.1	STOP	NO	YES	No	N/A	N/A	N/A	N/A	N/A	N/A	0	1	2	3	8.5	**11.5**	$ -	$ 100	$ 1,500	$ -	**$ 1,600**	
20	5/28/2014	CHEYENNE & CHEROKEE	SE	Medium	YES	YES	N/S	31	4.7	N/A	5	6.9	NO	NO	N/A	N/A	N/A	NO	0.3	0	STOP	NO	YES	No	N/A	N/A	N/A	N/A	N/A	N/A	0	0	3	3	8.5	**11.5**	$ -	$ 100	$ 1,500	$ -	**$ 1,600**	
38	5/29/2014	W MAIN ST & W 1ST ST	SW	Medium	YES	YES	E/W	48	6.4	1	7.4	5.2	NO	NO	N/A	N/A	N/A	NO	5.7	0.1	STOP	YES	YES	No	N/A	N/A	N/A	N/A	N/A	N/A	0	0	3	3	8.5	**11.5**	$ -	$ 100	$ 1,500	$ 375	**$ 1,975**	2" Curb w/ crosswalk approach
41	5/29/2014	W MAIN ST & WILSON AVE	SW	Medium	YES	YES	E/W	32	6.3	1	8.2	5.9	NO	NO	N/A	N/A	N/A	NO	4.9	1.5	STOP	YES	YES	No	N/A	N/A	N/A	N/A	N/A	N/A	0	0	3	3	8.5	**11.5**	$ -	$ 100	$ 1,500	$ -	**$ 1,600**	
49	5/29/2014	WILLIAMS RD & JADE PL	SE	Medium	YES	YES	N/S	38	2.9	0.2	5.2	4.3	NO	NO	N/A	N/A	N/A	NO	7.8	0.5	STOP	NO	YES	No	N/A	N/A	N/A	N/A	N/A	N/A	0	1	3	4	7.5	**11.5**	$ -	$ 100	$ 1,500	$ 375	**$ 1,975**	
236	6/6/2014	S JOHNS AVE & EMMETT SERENITY LIVING LOT	NW	Medium	YES	YES	N/S	80	5.2	0.6	8.7	7.8	NO	NO	N/A	N/A	N/A	NO	0.9	0.9	NONE	NO	YES	No	N/A	N/A	N/A	N/A	N/A	N/A	0	0	2	2	9.5	**11.5**	$ -	$ 100	$ 1,500	$ -	**$ 1,600**	
434	6/13/2014	OLD MAPLE DR & RIGGS ST (NORTH)	SE	Medium	YES	YES	N/S	150	3.5	0.9	6.5	4.5	NO	NO	N/A	N/A	N/A	YES	3.7	0.4	NONE	NO	YES	No	N/A	N/A	N/A	N/A	N/A	N/A	0	1	2	3	8.5	**11.5**	$ -	$ 100	$ 1,500	$ 375	**$ 1,975**	
435	6/13/2014	OLD MAPLE DR & RIGGS ST (SOUTH)	NE	Medium	YES	YES	N/S	138	5	1.8	6.6	3.1	NO	NO	N/A	N/A	N/A	NO	5.9	2	STOP	NO	YES	No	N/A	N/A	N/A	N/A	N/A	N/A	0	0	3	3	8.5	**11.5**	$ -	$ 100	$ 1,500	$ 375	**$ 1,975**	Roadway under construction
442	6/13/2014	N PINE AVE & E BLAINE ST	SE	Medium	YES	YES	N/S	68	4.9	0.4	2.6	1.7	NO	NO	N/A	N/A	N/A	NO	10.4	1.4	STOP	NO	YES	No	N/A	N/A	N/A	N/A	N/A	N/A	0	0	3	3	8.5	**11.5**	$ -	$ 100	$ 1,500	$ 375	**$ 1,975**	Roadway under construction
447	6/13/2014	E PARK ST & N DECLARK AVE	NW	Medium	YES	NO	N/S	60	0.4	2	N/A	N/A	NO	YES	60	60	2.3	YES	4.5	0.5	STOP	NO	YES	No	N/A	N/A	N/A	N/A	N/A	N/A	0	1	2	3	8.5	**11.5**	$ -	$ 100	$ 1,500	$ 375	**$ 1,975**	
84	5/30/2014	DION ST & N HAYES AVE	NW	Medium	YES	NO	E/W	60	1.1	0.7	N/A	N/A	NO	YES	60	57	1.1	NO	2.5	2.6	NONE	NO	YES	No	N/A	N/A	N/A	N/A	N/A	N/A	0	1	1	2	9	**11**	$ -	$ 100	$ 1,500	$ 375	**$ 1,975**	
124	6/2/2014	LINCOLN AVE & W 4TH ST	SW	Medium	YES	YES	E/W	58	4.2	0.6	N/A	N/A	NO	YES	58	50	1.9	NO	5.3	2	STOP	NO	YES	No	N/A	N/A	N/A	N/A	N/A	N/A	0	0	2	2	9	**11**	$ -	$ 100	$ 1,500	$ 375	**$ 1,975**	
135	6/3/2014	S BOISE AVE & W 2ND ST	NE	Medium	YES	NO	N/S	60	4.1	1	N/A	N/A	YES	YES	60	60	0.9	NO	2.8	1.6	STOP	NO	YES	No	N/A	N/A	N/A	N/A	N/A	N/A	0	0	2	2	9	**11**	$ -	$ 100	$ 1,500	$ -	**$ 1,600**	
136	6/3/2014	S BOISE AVE & W 2ND ST	NE	Medium	YES	NO	E/W	60	1.9	0.9	N/A	N/A	YES	YES	60	60	0.9	NO	4.9	0.4	STOP	NO	YES	No	N/A	N/A	N/A	N/A	N/A	N/A	0	0	2	2	9	**11**	$ -	$ 100	$ 1,500	$ -	**$ 1,600**	
146	6/4/2014	S COMMERCIAL AVE & W 4TH ST	SW	Medium	YES	NO	E/W	60	3.2	N/A	N/A	N/A	YES	YES	60	60	1.9	NO	1	1.1	STOP	NO	YES	No	N/A	N/A	N/A	N/A	N/A	N/A	0	0	2	2	9	**11**	$ -	$ 100	$ 1,500	$ -	**$ 1,600**	
148	6/4/2014	S COMMERCIAL AVE & W 4TH ST	SE	Medium	YES	YES	N/S	62	2.5	0.3	N/A	N/A	NO	YES	62	58	0.3	YES	2.2	1.2	STOP	YES	YES	No	N/A	N/A	N/A	N/A	N/A	N/A	0	1	1	2	9	**11**	$ -	$ 100	$ 1,500	$ 375	**$ 1,975**	
152	6/4/2014	S COMMERCIAL AVE & W 4TH ST	NW	Medium	YES	YES	N/S	60	3.9	0.9	10.4	6.6	NO	YES	60	58		NO	2.5	0.3	STOP	NO	YES	No	N/A	N/A	N/A	N/A	N/A	N/A	0	0	2	2	9	**11**	$ -	$ 100	$ 1,500	$ -	**$ 1,600**	
153	6/4/2014	S COMMERCIAL AVE & W 3RD ST	SW	Medium	YES	YES	N/S	61	2.6	0	N/A	N/A	NO	YES	61	60	0.3	YES	2.1	0.6	STOP	YES	YES	No	N/A	N/A	N/A	N/A	N/A	N/A	0	1	1	2	9	**11**	$ -	$ 100	$ 1,500	$ 375	**$ 1,975**	
157	6/4/2014	S COMMERCIAL AVE & W 3RD ST	NE	Medium	YES	YES	N/S	58	1.1	0.4	N/A	6.6	YES	YES	58	51	0.9	NO	0.4	1	STOP	YES	YES	No	N/A	N/A	N/A	N/A	N/A	N/A	0	0	2	2	9	**11**	$ -	$ 100	$ 1,500	$ -	**$ 1,600**	
159	6/4/2014	S COMMERCIAL AVE & W 3RD ST	NW	Medium	YES	YES	N/S	59	3.3	1	6.3	N/A	NO	YES	59	48	1.8	NO	6.3	1.1	STOP	YES	YES	No	N/A	N/A	N/A	N/A	N/A	N/A	0	0	2	2	9	**11**	$ -	$ 100	$ 1,500	$ 375	**$ 1,975**	
162	6/4/2014	S COMMERCIAL AVE & W 2ND ST	SE	Medium	YES	YES	E/W	50	1.6	0.1	N/A	N/A	YES	YES	50	58	1.2	NO	2.5	0.4	STOP	YES	YES	No	N/A	N/A	N/A	N/A	N/A	N/A	0	0	2	2	9	**11**	$ -	$ 100	$ 1,500	$ -	**$ 1,600**	
163	6/4/2014	S COMMERCIAL AVE & W 2ND ST	SE	Medium	YES	YES	N/S	58	1.1	0.6	N/A	N/A	NO	YES	58	50	1.2	YES	4.7	0.4	STOP	YES	YES	No	N/A

Not Compliant With:	
	ADAAG
	PROWAG
	BOTH

Priority	Number	Costs
High	163	$ 317,050
Medium	254	$ 458,200
Low	95	$ 128,700
Compliant	8	$ -
Total:	**520**	**$ 903,950**

	Location Details						Ramp							Landing				Transition Details						Detectable Warning Surfaces							Priority Score						Correction Costs					
GIS ID	Inspection Date	Crossing Description	Location	Priority	Sidewalk	Curb & Gutter	Ramp Direction	Ramp Width (in)	Running Slope (%)	Cross Slope (%)	Flare Slope A (%)	Flare Slope B (%)	Discontinuities	Landing Provided	Landing Width (in)	Landing Depth (in)	Maximum Slope (%)	Lip Present	Gutter Counter Slope (%)	Gutter Flowline Slope at Ramp (%)	Traffic Control	Marked X-Walk	X-Walk Clear Space	Domes	Depth (in)	Spans Curb Cut	Within 8 inches of Curb Line	Color	Color Contrast	Dome Dimensions are Correct	Number ADAAG	Number PROWAG	Number BOTH	Total Compliance Score	Location Score	**Composite Score**	Cost Add Domes	Cost Remove Existing	Add New Ramp	Modify Curb & Gutter	**Total Cost**	Comment
337	6/10/2014	DUCHESS TR & MARIPOSA CT	SE	Medium	YES	YES	N/S	128	6.1	2.9	8.8	1.4	NO	YES	128	45	3.1	NO	8.9	1.2	NONE	NO	YES	No	N/A	N/A	N/A	N/A	N/A	N/A	0	1	4	5	5	**10**	$ -	$ 100	$ 1,500	$ 375	**$ 1,975**	
345	6/11/2014	QUEEN ANNE DR & MIMOSA LN	S	Medium	YES	YES	E/W	49	8.2	2.9	6.9	6.5	NO	YES	49	36	2.4	NO	2.4	1.9	NONE	NO	YES	No	N/A	N/A	N/A	N/A	N/A	N/A	0	1	3	4	6	**10**	$ -	$ 100	$ 1,500	$ -	**$ 1,600**	
355	6/11/2014	GALA TR & ALBERTA AVE	S	Medium	YES	YES	N/S	100	6.8	1.8	5.8	6.7	NO	YES	80	47	2.7	NO	6.6	1	STOP	NO	YES	No	N/A	N/A	N/A	N/A	N/A	N/A	0	1	3	4	6	**10**	$ -	$ 100	$ 1,500	$ 375	**$ 1,975**	
362	6/11/2014	E QUAIL RUN RD & REGENCY WAY	SW	Medium	YES	YES	N/S	36	7.7	0.3	6.4	4.6	NO	YES	36	51	1.1	NO	6.6	0.6	STOP	NO	YES	No	N/A	N/A	N/A	N/A	N/A	N/A	0	2	2	4	6	**10**	$ 750	$ -	$ -	$ 375	**$ 1,125**	
367	6/11/2014	MONARCH ST & REGENCY WAY	SE	Medium	YES	YES	N/S	101	8.6	1.2	4.6	5.8	NO	YES	84	33	1.7	NO	8.2	0.1	YIELD	NO	YES	No	N/A	N/A	N/A	N/A	N/A	N/A	0	0	4	4	6	**10**	$ -	$ 100	$ 1,500	$ 375	**$ 1,975**	Ramp leads into parking lot
368	6/11/2014	MONARCH ST & PALACE AVE	SW	Medium	YES	YES	E/W	104	5.8	0.7	7.8	3.3	NO	YES	87	37	2.6	NO	8.6	1.6	NONE	NO	YES	No	N/A	N/A	N/A	N/A	N/A	N/A	0	1	3	4	6	**10**	$ -	$ 100	$ 1,500	$ 375	**$ 1,975**	
374	6/11/2014	PRINCESS ST & REGENCY WAY	NE	Medium	YES	YES	N/S	98	5	1.6	1.3	7.6	NO	YES	74	42	3.8	NO	5.3	0.5	NONE	NO	YES	No	N/A	N/A	N/A	N/A	N/A	N/A	0	1	3	4	6	**10**	$ -	$ 100	$ 1,500	$ 375	**$ 1,975**	
390	6/12/2014	E MARSH CREEK RD & S BEAVER CREEK WAY	NE	Medium	YES	YES	E/W	111	7.9	1.6	5.4	1.5	YES	YES	92	57	1.5	NO	9	1.3	STOP	NO	YES	No	N/A	N/A	N/A	N/A	N/A	N/A	0	0	3	3	7	**10**	$ 750	$ -	$ -	$ 375	**$ 1,125**	
392	6/12/2014	MID S BEAVER CREEK WAY	W	Medium	YES	YES	E/W	56	5.4	1.4	4.8	3.3	NO	YES	56	46	2.7	NO	4.6	1.2	NONE	NO	YES	No	N/A	N/A	N/A	N/A	N/A	N/A	0	1	2	3	7	**10**	$ -	$ 100	$ 1,500	$ -	**$ 1,600**	
395	6/12/2014	S SUBSTATION RD & QUEEN ANNE DR	NE	Medium	YES	YES	N/S	48	9.1	0.1	7.7	7.6	YES	YES	48	48	1.3	NO	10.3	0.3	STOP	NO	YES	No	N/A	N/A	N/A	N/A	N/A	N/A	0	0	4	4	6	**10**	$ -	$ 100	$ 1,500	$ 375	**$ 1,975**	
396	6/12/2014	S SUBSTATION RD & QUEEN ANNE DR	SE	Medium	YES	YES	N/S	48	7.2	0.4	9	5.5	YES	YES	48	45	0.9	NO	9.7	0.8	STOP	NO	YES	No	N/A	N/A	N/A	N/A	N/A	N/A	0	1	3	4	6	**10**	$ 750	$ -	$ -	$ 375	**$ 1,125**	
408	6/12/2014	S SUBSTATION RD & FELTHAM PEAK DR	NW	Medium	YES	YES	E/W	48	3.5	2.8	5.2	6.4	NO	YES	48	48	1.1	NO	13.2	0.1	STOP	NO	YES	No	N/A	N/A	N/A	N/A	N/A	N/A	0	0	3	3	7	**10**	$ -	$ 100	$ 1,500	$ 375	**$ 1,975**	
410	6/12/2014	S SUBSTATION RD & ELEMENTARY SCHOOL LOT (NORTH)	SW	Medium	YES	YES	N/S	36	3.6	N/A	7.1	6.3	NO	YES	50	48	1.2	YES	2.9	0.1	NONE	NO	YES	No	N/A	N/A	N/A	N/A	N/A	N/A	0	2	1	3	7	**10**	$ -	$ 100	$ 1,500	$ 375	**$ 1,975**	
412	6/12/2014	S SUBSTATION RD & ELEMENTARY SCHOOL LOT (SOUTH)	SW	Medium	YES	YES	N/S	36	3	1	5.4	8.2	NO	YES	48	48	1.9	NO	5.8	0.2	NONE	NO	YES	No	N/A	N/A	N/A	N/A	N/A	N/A	0	1	2	3	7	**10**	$ 750	$ -	$ -	$ 375	**$ 1,125**	
416	6/12/2014	E 12TH ST & ROYALTY AVE	NW	Medium	YES	YES	N/S	41	5.2	1.4	8.5	5.7	NO	YES	41	52	0.4	NO	6	1.6	STOP	NO	YES	No	N/A	N/A	N/A	N/A	N/A	N/A	0	2	2	4	6	**10**	$ 750	$ -	$ -	$ 375	**$ 1,125**	
420	6/12/2014	E 12TH ST & REGENCY WAY	NW	Medium	YES	YES	N/S	36	7.1	N/A	5.8	5.7	NO	YES	37	50	1.2	NO	7.3	1.9	STOP	NO	YES	No	N/A	N/A	N/A	N/A	N/A	N/A	0	2	2	4	6	**10**	$ -	$ 100	$ 1,500	$ 375	**$ 1,975**	
432	6/12/2014	E 12TH ST & GEMSTONE WAY	NW	Medium	YES	YES	E/W	72	4.7	1.5	4.8	5.7	NO	NO	N/A	N/A	N/A	NO	7.8	0.8	STOP	YES	YES	No	N/A	N/A	N/A	N/A	N/A	N/A	0	0	3	3	7	**10**	$ -	$ 100	$ 1,500	$ 375	**$ 1,975**	
37	5/29/2014	W 2ND ST & WILSON AVE	SE	Low	YES	YES	E/W	48	4.9	0.9	7.8	7.2	NO	NO	N/A	N/A	N/A	NO	6.5	0.1	NONE	NO	YES	YES	24	YES	YES	YELLOW	YES	YES	0	0	2	2	7.5	**9.5**	$ -	$ 100	$ 1,500	$ 375	**$ 1,975**	Landing is offset
46	5/29/2014	W 12TH ST & WILLIAMS RD	NW	Low	YES	YES	E/W	48	6.5	1.8	8.2	2.4	NO	YES	48	67	3.2	NO	2.9	3.7	STOP	NO	YES	YES	24	YES	YES	YELLOW	YES	YES	0	1	1	2	7.5	**9.5**	$ -	$ 100	$ 1,500	$ 375	**$ 1,975**	
433	6/13/2014	OLD MAPLE DR & RIGGS ST (NORTH)	NE	Low	YES	YES	N/S	136	1.7	0.1	4.3	5	NO	NO	N/A	N/A	N/A	NO	1.5	1.5	NONE	NO	YES	No	N/A	N/A	N/A	N/A	N/A	N/A	0	0	2	2	7.5	**9.5**	$ -	$ 100	$ 1,500	$ -	**$ 1,600**	
436	6/13/2014	OLD MAPLE DR & RIGGS ST (SOUTH)	SE	Low	YES	YES	N/S	132	2.6	1.1	5.9	1.8	NO	NO	N/A	N/A	N/A	NO	2.6	0.9	STOP	NO	YES	No	N/A	N/A	N/A	N/A	N/A	N/A	0	0	2	2	7.5	**9.5**	$ -	$ 100	$ 1,500	$ -	**$ 1,600**	
444	6/13/2014	N PINE AVE & E BLAINE ST	NW	Low	YES	YES	E/W	74	4.5	1	5.9	5.1	NO	NO	N/A	N/A	N/A	NO	0.8	0.5	STOP	NO	YES	No	N/A	N/A	N/A	N/A	N/A	N/A	0	0	2	2	7.5	**9.5**	$ -	$ 100	$ 1,500	$ -	**$ 1,600**	
457	6/16/2014	E MAIN ST & DON'S MARKET GAS STATION	SW	Low	YES	YES	E/W	64	3.4	2.1	8	13.5	NO	YES	66	66	1.4	NO	4	1.3	NONE	NO	YES	No	N/A	N/A	N/A	N/A	N/A	N/A	0	0	3	3	6.5	**9.5**	$ -	$ 100	$ 1,500	$ -	**$ 1,600**	
459	6/16/2014	E MAIN ST & RIGGS ST	NE	Low	YES	YES	E/W	54	7.3	1.5	N/A	N/A	NO	YES	60	60	2.7	NO	0.6	0.2	STOP	NO	YES	No	N/A	N/A	N/A	N/A	N/A	N/A	0	0	2	2	7.5	**9.5**	$ -	$ 100	$ 1,500	$ -	**$ 1,600**	
466	6/16/2014	E MAIN ST & N MOFFAT AVE	NW	Low	YES	NO	E/W	54	1.6	0.2	N/A	N/A	NO	YES	60	54	3	YES	N/A	N/A	STOP	NO	YES	No	N/A	N/A	N/A	N/A	N/A	N/A	0	1	2	3	6.5	**9.5**	$ -	$ 100	$ 1,500	$ 375	**$ 1,975**	
32	5/29/2014	W 3RD ST & WILSON AVE	NE	Low	YES	YES	E/W	48	7.1	0.4	2.4	4.8	NO	NO	N/A	N/A	N/A	NO	2.4	1.2	NONE	NO	YES	YES	24	YES	YES	YELLOW	YES	YES	0	0	1	1	8	**9**	$ -	$ 100	$ 1,500	$ -	**$ 1,600**	
33	5/29/2014	W 3RD ST & WILSON AVE	NW	Low	YES	YES	E/W	48	6.9	0.7	6.1	3.6	NO	NO	N/A	N/A	N/A	NO	4.3	0.6	NONE	NO	YES	YES	24	YES	YES	YELLOW	YES	YES	0	0	1	1	8	**9**	$ -	$ 100	$ 1,500	$ -	**$ 1,600**	
114	6/2/2014	MURRAY AVE & W 4TH ST	SW	Low	YES	YES	E/W	60	2.8	0.6	N/A	N/A	NO	YES	60	60	0.7	YES	N/A	1.6	STOP	YES	YES	No	N/A	N/A	N/A	N/A	N/A	N/A	0	1	1	2	7	**9**	$ -	$ 100	$ 1,500	$ 375	**$ 1,975**	
118	6/2/2014	MURRAY AVE & W 2ND ST	SW	Low	YES	YES	E/W	48	5.8	0.7	N/A	N/A	NO	YES	60	53	4.9	NO	2.9	1.1	NONE	NO	YES	YES	24	YES	YES	YELLOW	YES	YES	0	0	1	1	8	**9**	$ -	$ 100	$ 1,500	$ -	**$ 1,600**	
133	6/3/2014	S BOISE AVE & W 2ND ST	SE	Low	YES	NO	E/W	60	2.3	0.5	N/A	N/A	NO	YES	60	60	1.3	NO	4.8	1	STOP	NO	YES	No	N/A	N/A	N/A	N/A	N/A	N/A	0	0	1	1	8	**9**	$ -	$ 100	$ 1,500	$ -	**$ 1,600**	
134	6/3/2014	S BOISE AVE & W 2ND ST	SE	Low	YES	NO	N/S	60	1.9	1.6	N/A	N/A	NO	YES	60	60	1.3	NO	3.9	0.2	STOP	NO	YES	No	N/A	N/A	N/A	N/A	N/A	N/A	0	0	1	1	8	**9**	$ -	$ 100	$ 1,500	$ -	**$ 1,600**	
140	6/3/2014	S COMMERCIAL AVE & 6TH ST	SE	Low	YES	NO	N/S	55	0.2	0.5	N/A	N/A	NO	YES	55	60	1.3	NO	4.6	0.7	NONE	NO	YES	No	N/A	N/A	N/A	N/A	N/A	N/A	0	0	1	1	8	**9**	$ -	$ 100	$ 1,500	$ -	**$ 1,600**	
147	6/4/2014	S COMMERCIAL AVE & W 4TH ST	SE	Low	YES	NO	E/W	55	0.2	1	N/A	N/A	NO	YES	58	62	0.3	NO	0.6	0.3	STOP	NO	YES	No	N/A	N/A	N/A	N/A	N/A	N/A	0	0	1	1	8	**9**	$ -	$ 100	$ 1,500	$ -	**$ 1,600**	
151	6/4/2014	S COMMERCIAL AVE & W 4TH ST	NW	Low	YES	YES	E/W	58	4.1	0.5	5.7	7.4	NO	YES	58	60	0.4	NO	2.6	0.2	STOP	YES	YES	No	N/A	N/A	N/A	N/A	N/A	N/A	0	0	1	1	8	**9**	$ 750	$ -	$ -	$ -	**$ 750**	
154	6/4/2014	S COMMERCIAL AVE & W 3RD ST	SW	Low	YES	YES	E/W	61	5.5	1.5	N/A	N/A	NO	YES	61	60	0.3	NO	2.5	0.2	STOP	YES	YES	No	N/A	N/A	N/A	N/A	N/A	N/A	0	0	1	1	8	**9**	$ -	$ 100	$ 1,500	$ -	**$ 1,600**	
158	6/4/2014	S COMMERCIAL AVE & W 3RD ST	NE	Low	YES	YES	E/W	48	2.2	0	7.3	6	NO	YES	51	58	0.9	NO	2.5	1.6	STOP	NO	YES	No	N/A	N/A	N/A	N/A	N/A	N/A	0	0	1	1	8	**9**	$ 750	$ -	$ -	$ -	**$ 750**	
160	6/4/2014	S COMMERCIAL AVE & W 2ND ST	SW	Low	YES	YES	N/S	58	0.6	0.6	N/A	N/A	NO	YES	58	58	0.3	NO	4.1	0.5	STOP	YES	YES	No	N/A	N/A	N/A	N/A	N/A	N/A	0	0	1	1	8	**9**	$ -	$ 100	$ 1,500	$ -	**$ 1,600**	
165	6/4/2014	S COMMERCIAL AVE & W 2ND ST	NW	Low	YES	YES	N/S	60	2.4	0.5	N/A	N/A	NO	YES	60	48	1.2	NO	3.3	0	STOP	YES	YES	No	N/A	N/A	N/A	N/A	N/A	N/A	0	0	1	1	8	**9**	$ -	$ 100	$ 1,500	$ -	**$ 1,600**	
175	6/4/2014	S HAYES AVE & E 4TH ST	SW	Low	YES	YES	N/S	60	8.3	0.8	7.1	7	NO	YES	60	60	1.2	NO	2	0.4	STOP	YES	YES	No	N/A	N/A	N/A	N/A	N/A	N/A	0	0	1	1	8	**9**	$ 750	$ -	$ -	$ -	**$ 750**	
180	6/4/2014	S HAYES AVE & E 4TH ST	NW	Low	YES	YES	E/W	48	3.7	0.7	3.3	2.5	NO	YES	70	61	1.3	NO	4.3	0.8	STOP	YES	YES	No	N/A	N/A	N/A	N/A	N/A	N/A	0	0	1	1	8	**9**	$ 750	$ -	$ -	$ -	**$ 750**	
209	6/5/2014	E 1ST ST & S WARDWELL AVE	NW	Low	YES	YES	E/W	60	4.7	0.6	N/A	N/A	NO	YES	60	60	1.33	NO	3.8	1.6	STOP	YES	YES	No	N/A	N/A	N/A	N/A	N/A	N/A	0	0	1	1	8	**9**	$ -	$ 100	$ 1,500	$ -	**$ 1,600**	
212	6/5/2014	E 1ST ST & S MCKINLEY AVE	SE	Low	YES	YES	E/W	60	1.5	0.3	N/A	N/A	NO	YES	60	60	0.9	NO	0.7	N/A	STOP	YES	YES	No	N/A	N/A	N/A	N/A	N/A	N/A	0	0	1	1	8	**9**	$ -	$ 100	$ 1,500	$ 375	**$ 1,975**	
241	6/6/2014	S JOHNS AVE & E 6TH ST	SE	Low	YES	YES	N/S	48	5.6	0.7	2.8	5.7	NO	YES	69	48	2.1	NO	4.9	0.1	STOP	NO	YES	YES	24	YES	YES	YELLOW	YES	YES	0	0	1	1	8	**9**	$ -	$ 100	$ 1,500	$ -	**$ 1,600**	
254	6/6/2014	S JOHNS AVE & E 2ND ST	NE	Low	YES	YES	N/S	48	6.5	1.3	5.1	4.4	NO	YES	60	60	1	NO	12.3	0	STOP	YES	YES	YES	24	YES	YES	YELLOW	YES	YES	0	0	1	1	8	**9**	$ -	$ -	$ -	$ 375	**$ 375**	
281	6/9/2014	E 2ND ST & S WARDWELL AVE	SW	Low	YES	YES	E/W	57	0.5	1.7	N/A	N/A	NO	YES	57	113	1.7	NO	3.1	1.4	STOP	YES	YES	No	N/A	N/A	N/A	N/A	N/A	N/A	0	0	1	1	8	**9**	$ -	$ 100	$ 1,500	$ -	**$ 1,600**	
452	6/13/2014	E PARK ST & N JOHNS AVE	SE	Low	YES	YES	N/S	60	4.7	0.5	N/A	N/A	NO	YES	60	48	1.3	NO	N/A	N/A	STOP	YES	YES	No	N/A	N/A	N/A	N/A	N/A	N/A	0	0	1	1	8	**9**	$ -	$ 100	$ 1,500	$ 375	**$ 1,975**	GUTTER UNDER RAMP THRU CULVERT
486	6/16/2014	E MAIN ST & S MCKINLEY AVE	SW	Low	YES	YES	N/S	58	2.3	0.8	N/A	N/A	NO	YES	60	61	1.5	NO	1.6	0.4	STOP	YES	YES	No	N/A	N/A	N/A	N/A	N/A	N/A	0	0	1	1	8	**9**	$ -	$ 100	$ 1,500	$ -	**$ 1,600**	6" Curb w/crosswalk approach
496	6/16/2014	E MAIN ST & N WARDWELL AVE	NW	Low	YES	YES	E/W	60	1.4	0.4	N/A	N/A	NO	YES	48	61	1.1	NO	0.1	1.5	STOP	YES	YES	No	N/A	N/A	N/A	N/A	N/A	N/A	0	0	1	1	8	**9**	$ -	$ 100	$ 1,500	$ -	**$ 1,600**	Crossing direction is E/W
499	6/16/2014	E MAIN ST & S HAYES AVE	SE	Low	YES	YES	E/W	48	8.3	1.7	4.2	5.3	NO	YES	48	63	1.7	NO	5.6	0.4	STOP	YES	YES	YES	24	YES	YES	RED	YES	YES	0	0	1	1	8	**9**	$ -	$ -	$ -	$ 375	**$ 375**	
501	6/16/2014	E MAIN ST & S HAYES AVE	SW	Low	YES	YES	N/S	48	8.3	1.6	3.6	7.7	NO	YES	48	52	2.4	NO	4.2	0.2	STOP	YES	YES	YES	24	YES	YES	RED	YES	YES	0	0	1	1	8	**9**	$ -	$ 100	$ 1,500	$ -	**$ 1,600**	
503	6/16/2014	E MAIN ST & N HAYES AVE	NW	Low	YES	YES	E/W	48	6.3	0.5	5.5	8	NO	YES	48	48	3.2	NO	4.9	0.4	STOP	YES	YES	YES	24	YES	YES	RED	YES	YES	0	0	1	1	8	**9**	$ -	$ 100	$ 1,500	$ -	**$ 1,600**	
505	6/16/2014	E MAIN ST & N HAYES AVE	NE	Low	YES	YES	N/S	48	8.1	2	3.6	6.1	NO	YES	48	68	1.4	NO	7	1.5	STOP	YES	YES	YES	24	YES	YES	RED	YES	YES	0	0	1	1	8	**9**	$ -	$ -	$ -	$ 375	**$ 375**	
506	6/16/2014	W MAIN ST & S COMMERCIAL AVE	SE	Low	YES	YES	N/S	48	7.6	0.3	5.4	5.8	NO	YES	48	48	6.6	NO	4.1	0.4	STOP	YES	YES	YES	24	YES	YES	RED	YES	YES	0	0	1	1	8	**9**	$ -	$ 100	$ 1,500	$ -	**$ 1,600**	
507	6/16/2014	W MAIN ST & S COMMERCIAL AVE	SE	Low	YES	YES	E/W	48	7	0.1	7.4	6.1	NO	YES	48	48	6.6	NO	3.8	1	STOP	YES	YES	YES	24	YES	YES	RED	YES	YES	0	0	1	1	8	**9**	$ -	$ 100	$ 1,500	$ -	**$ 1,600**	
508	6/16/2014	W MAIN ST & S COMMERCIAL AVE	SW	Low	YES	YES	E/W	48	7.3	0.6	4.8	6	NO	YES	49	94	6	NO	3.9	0	STOP	YES	YES	YES	24	YES	YES	RED	YES	YES	0	0	1	1	8	**9**	$ -	$ 100	$ 1,500	$ -	**$ 1,600**	
509	6/16/2014	W MAIN ST & S COMMERCIAL AVE	SW	Low	YES	YES	N/S	48	8.3	1.2	6	4.8	NO	YES	48	94	2.7	NO	2.8	0.4	STOP	YES	YES	YES	24	YES	YES	RED	YES	YES	0	0	1	1	8	**9**	$ -	$ 100	$ 1,500	$ -	**$ 1,600**	
510	6/16/2014	W MAIN ST & N COMMERCIAL AVE	NW	Low	YES	YES	N/S	48	8.3	0.2	6.7	6.2	NO	YES	50	62	4.2	NO	2.7	0.6	STOP	YES	YES	YES	24	YES	YES	RED	YES	YES	0	0	1	1	8	**9**	$ -	$ 100	$ 1,500	$ -	**$ 1,600**	
511	6/16/2014	W MAIN ST & N COMMERCIAL AVE	NW	Low	YES	YES	E/W	48	7.1	1.1	4.7	5.7	NO	YES	48	66	4	NO	3.2	0.6	STOP	YES	YES	YES	24	YES	YES	RED	YES	YES	0	0	1	1	8	**9**	$ -	$ 100	$ 1,500	$ -	**$ 1,600**	6" Curb w/ crosswalk approach/crosses street to park
512	6/16/2014	W MAIN ST & N COMMERCIAL AVE	NE	Low	YES	YES	E/W	48	8.2	1	7.9	5.3	NO	YES	50	48	3.9	NO	3.7	0.3	STOP	YES	YES	YES	24	YES	YES	RED	YES	YES	0	0	1	1	8	**9**	$ -	$ 100	$ 1,500	$ -	**$ 1,600**	
513	6/16/2014	W MAIN ST & N COMMERCIAL AVE	NE	Low	YES	YES	N/S	48	7.9	0.1	5.1	6	NO	YES	50	48	2.7	NO	3.4	1.1	STOP	YES	YES	YES	24	YES	YES	RED	YES	YES	0	0	1	1	8	**9**	$ -	$ 100	$ 1,500	$ -	**$ 1,600**	
515	6/16/2014	W MAIN ST & S BOISE AVE	SE	Low	YES	YES	N/S	48	6.6	1.2	6.9	3.5	NO	YES	48	58	2.8	NO	4.1	0.2	STOP	YES	YES	YES	24	YES	YES	RED	YES	YES	0	0	1	1	8	**9**	$ -	$ 100	$ 1,500	$ -	**$ 1,600**	6" Curb w/ sidewalk approach
518	5/30/2014	DEWEY ST & PARKING LOT (2)	NW	Low	YES	YES	N/S	53	6	0.5	N/A	N/A	NO	YES	58	58	1.2	NO	4.7	0.7	NONE	NO	YES	No	N/A	N/A	N/A	N/A	N/A	N/A	0	0	1	1	8	**9**	$ -	$ 100	$ 1,500	$ -	**$ 1,600**	
292	6/9/2014	S AMERICAN AVE & INDEPENDENCE LN	NW	Low	YES	YES	N/S	102	2.6	0.5	6.1	8.1	NO	YES	102	45	0.8	NO	5	0.2	NONE	NO	YES	No	N/A	N/A	N/A	N/A	N/A	N/A	0	1	1	2	6.5	**8.5**	$ 750	$ -	$ -	$ -	**$ 750**	
295	6/9/2014	S AMERICAN AVE & FREEDOM ST	SW	Low	YES	YES	N/S	77	5.4	0.8	2	6.3	NO	YES	77	46	1.7	NO	0.8	1.3	NONE	NO	YES	No	N/A	N/A	N/A	N/A	N/A	N/A	0	1	1	2	6.5	**8.5**	$ 750	$ -	$ -	$ -	**$ 750**	
297	6/9/2014	S AMERICAN AVE& LIBERTY ST	SW	Low	YES	YES	N/S	79	3.9	0.5	6.1	2.9	NO	YES	79	46	1.4	NO	3.2	0.1	NONE	NO	YES	No	N/A	N/A	N/A	N/A	N/A	N/A	0	1	1	2	6.5	**8.5**	$ 750	$ -	$ -	$ -	**$ 750**	
21	5/28/2014	MILL & HOMESTEAD	NE	Low	YES	YES	N/S	86	5.1	1.5	9.5	3.9	NO	YES	86	50	3.3	NO	9.3	0.9	STOP	NO	YES	No	N/A	N/A	N/A	N/A	N/A	N/A	0	0	3	3	5	**8**	$ -	$ 100	$ 1,500	$ 375	**$ 1,975**	
336	6/10/2014	DUCHESS TR & MARIPOSA CT	NE	Low	YES	YES	N/S	128	5.6	0.3	4.5	4.9	NO	YES	128	44	2.3	YES	N/A	1.2	NONE	NO	YES	No	N/A	N/A	N/A	N/A	N/A	N/A	0	2	2	4	4	**8**	$ -	$ 100	$ 1,500	$ 375	**$ 1,975**	
338	6/10/2014	QUEEN ANNE DR & DUCHESS TR	NE	Low	YES	YES	E/W	105	5.4	0.1	6.7	4.3	NO	YES	105	46	2.8	NO	8.4	1.6	STOP	NO	YES	No	N/A	N/A	N/A	N/A	N/A	N/A	0	1	3	4	4	**8**	$ -	$ 100	$ 1,500	$ 375	**$ 1,975**	
349	6/11/2014	QUEEN ANNE DR & MIMOSA LN	NW	Low	YES	YES	E/W	51	6.9	2.2	6.7	5.8	NO	YES	49	36	0.4	NO	1.7	1.3	NONE	NO	YES	No	N/A	N/A	N/A	N/A	N/A	N/A	0	1	2	3	5	**8**	$ -	$ 100	$ 1,500	$ -	**$ 1,600**	
352	6/11/2014	QUEEN ANNE DR & ISLAND ENTRANCE	NW	Low	YES	YES	N/S	51	7.2	0.2	7.9	7	NO	YES	48	38	1.5	YES	2.2	1.2	NONE	NO	YES	No	N/A	N/A	N/A	N/A	N/A	N/A	0	2	1	3	5	**8**	$ 750	$ -	$ -	$ 375	**$ 1,125**	
353	6/11/2014	QUEEN ANNE DR & ISLAND ENTRANCE	SW	Low	YES	YES	N/S	49	6.6	1.3	5.9	7.8	NO	YES	46	39	1.5	NO	4.2	1.5	NONE	NO	YES	No	N/A	N/A	N/A	N/A	N/A	N/A	0	2	1	3	5	**8**	$ 750	$ -	$ -	$ -	**$ 750**	
354	6/11/2014	QUEEN ANNE DR SOUTH OF SUB D	NE	Low	YES	YES	N/S	72	7.2	2	4.5	6.1	NO	YES	72	37	2.1	NO	3.9	0.5	NONE	NO	YES	No	N/A	N/A	N/A	N/A	N/A	N/A	0	1	2	3	5	**8**	$ -	$ 100	$ 1,500	$ -	**$ 1,600**	
356	6/11/2014	GALA TR & ALBERTA AVE	E	Low	YES	YES	E/W	100	5.9	0.3	5.6	6.1	NO	YES	75	42	1	NO	6.6	0	STOP	NO	YES	No	N/A	N/A	N/A	N/A	N/A	N/A	0	1	2	3	5	**8**	$ 750	$ -	$ -	$ 375	**$ 1,125**	
366	6/11/2014	MONARCH ST & REGENCY WAY	NE	Low	YES	YES	N/S	107	6.8	1.9	6.9	2.8	NO	YES	84	54	2.9	NO	7.9	1.4	YIELD	NO	YES	No	N/A	N/A	N/A	N/A	N/A	N/A	0	0	3	3	5	**8**	$ -	$ 100	$ 1,500	$ 375	**$ 1,975**	
370	6/11/2014	PRINCESS ST & ROYALTY AVE	NW	Low	YES	YES	N/S	101	4.6	1.4	2.8	5.5	NO	YES	80	40	1.7	NO	8.2	1.4	NONE	NO	YES	No	N/A	N/A

Not Compliant With:	
	ADAAG
	PROWAG
	BOTH

Priority	Number	Costs
High	163	$ 317,050
Medium	254	$ 458,200
Low	95	$ 128,700
Compliant	8	$ -
Total:	**520**	**$ 903,950**

	Location Details						Ramp							Landing				Transition Details						Detectable Warning Surfaces							Priority Score						Correction Costs					
GIS ID	Inspection Date	Crossing Description	Location	Priority	Sidewalk	Curb & Gutter	Ramp Direction	Ramp Width (in)	Running Slope (%)	Cross Slope (%)	Flare Slope A (%)	Flare Slope B (%)	Discontinuities	Landing Provided	Landing Width (in)	Landing Depth (in)	Maximum Slope (%)	Lip Present	Gutter Counter Slope (%)	Gutter Flowline Slope at Ramp (%)	Traffic Control	Marked X-Walk	X-Walk Clear Space	Domes	Depth (in)	Spans Curb Cut	Within 8 inches of Curb Line	Color	Color Contrast	Dome Dimensions are Correct	Number ADAAG	Number PROWAG	Number BOTH	Total Compliance Score	Location Score	**Composite Score**	Cost Add Domes	Cost Remove Existing	Add New Ramp	Modify Curb & Gutter	**Total Cost**	Comment
344	6/11/2014	QUEEN ANNE DR & MIMOSA LN	E	Low	YES	YES	E/W	53	8.3	0.8	7.5	4.3	NO	YES	53	41	1.4	NO	4.6	0.6	NONE	NO	YES	No	N/A	N/A	N/A	N/A	N/A	N/A	0	1	1	2	4	**6**	$ 750	$ -	$ -	$ -	**$ 750**	
347	6/11/2014	MID MIMOSA LN	S	Low	YES	YES	N/S	48	4.2	1.1	5.9	2.8	NO	NO	N/A	N/A	N/A	NO	1.2	1	NONE	NO	YES	No	N/A	N/A	N/A	N/A	N/A	N/A	0	0	2	2	4	**6**	$ -	$ 100	$ 1,500	$ -	**$ 1,600**	
348	6/11/2014	QUEEN ANNE DR & MIMOSA LN	NE	Low	YES	YES	E/W	52	6.8	1.8	7	5	NO	YES	52	38	1.3	NO	3.7	1.6	NONE	NO	YES	No	N/A	N/A	N/A	N/A	N/A	N/A	0	1	1	2	4	**6**	$ 750	$ -	$ -	$ -	**$ 750**	
350	6/11/2014	QUEEN ANNE DR & MIMOSA LN	S	Low	YES	YES	N/S	58	6.8	0.5	8.1	3.5	NO	YES	58	36	1.8	NO	2.4	0	NONE	NO	YES	No	N/A	N/A	N/A	N/A	N/A	N/A	0	1	1	2	4	**6**	$ 750	$ -	$ -	$ -	**$ 750**	
351	6/11/2014	QUEEN ANNE DR NORTH OF SUB D	SE	Low	YES	YES	N/S	51	7.4	1.9	6.5	4.5	NO	YES	49	37	1.5	NO	3.5	1.5	NONE	NO	YES	No	N/A	N/A	N/A	N/A	N/A	N/A	0	1	1	2	4	**6**	$ 750	$ -	$ -	$ -	**$ 750**	
357	6/11/2014	GALA TR & ALBERTA AVE	N	Low	YES	YES	N/S	50	6.5	0	4	2.3	NO	YES	50	48	1.8	NO	10.1	0.1	STOP	NO	YES	No	N/A	N/A	N/A	N/A	N/A	N/A	0	0	2	2	4	**6**	$ 750	$ -	$ -	$ 375	**$ 1,125**	
389	6/12/2014	E MARSH CREEK RD & S BEAVER CREEK WAY	NW	Low	YES	YES	E/W	108	6.1	0.5	4.9	2.5	NO	YES	64	48	1.3	NO	0.3	0.1	STOP	NO	YES	No	N/A	N/A	N/A	N/A	N/A	N/A	0	0	1	1	5	**6**	$ 750	$ -	$ -	$ -	**$ 750**	
25	5/28/2014	DITTMAN DR & HOMESTEAD	NE	Low	YES	YES	E/W	106	6.5	1.9	5.2	4.6	NO	YES	106	50	1.6	NO	0.5	5.3	STOP	NO	YES	No	N/A	N/A	N/A	N/A	N/A	N/A	0	1	1	2	2	**4**	$ 750	$ -	$ -	$ 375	**$ 1,125**	
27	5/28/2014	KAETZEL WAY & DITTMAN DR	SW	Low	YES	YES	E/W	105	7.5	1.1	7	3.4	NO	YES	105	50	0.5	NO	5.5	0.7	STOP	NO	YES	No	N/A	N/A	N/A	N/A	N/A	N/A	0	0	2	2	2	**4**	$ 750	$ -	$ -	$ 375	**$ 1,125**	
341	6/11/2014	QUEEN ANNE DR & GALA TR	E	Low	YES	YES	E/W	101	8	0.2	6.8	5.9	NO	YES	85	44	0.5	NO	4.6	0.3	NONE	NO	YES	No	N/A	N/A	N/A	N/A	N/A	N/A	0	1	1	2	2	**4**	$ 750	$ -	$ -	$ -	**$ 750**	
342	6/11/2014	QUEEN ANNE DR & GALA TR	S	Low	YES	YES	E/W	100	7.4	1.1	8.3	2.2	NO	YES	75	46	1.8	NO	3.8	0	NONE	NO	YES	No	N/A	N/A	N/A	N/A	N/A	N/A	0	1	1	2	2	**4**	$ 750	$ -	$ -	$ -	**$ 750**	
340	6/11/2014	QUEEN ANNE DR & GALA TR	N	Low	YES	YES	N/S	59	7.3	0.1	7.7	7.3	NO	YES	59	51	0.9	NO	2.3	0.2	NONE	NO	YES	No	N/A	N/A	N/A	N/A	N/A	N/A	0	0	1	1	1	**2**	$ 750	$ -	$ -	$ -	**$ 750**	6" Curb w/ crosswalk approach
116	6/2/2014	MURRAY AVE & W 3RD ST	NW	Compliant	YES	YES	N/S	48	6	1	5.4	5.5	NO	YES	49	84	0.1	NO	3.9	0.7	NONE	NO	YES	YES	24	YES	YES	YELLOW	YES	YES	0	0	0	0	7	**0**	$ -	$ -	$ -	$ -	**$ -**	
117	6/2/2014	MURRAY AVE & W 3RD ST	NW	Compliant	YES	YES	E/W	48	6.3	0.2	4.7	4.9	NO	YES	48	68	1.5	NO	3.8	1.4	NONE	NO	YES	YES	24	YES	YES	YELLOW	YES	YES	0	0	0	0	7	**0**	$ -	$ -	$ -	$ -	**$ -**	
242	6/6/2014	S JOHNS AVE & E 6TH ST	NE	Compliant	YES	YES	N/S	48	6.7	0.7	5.7	3.2	NO	YES	64	48	1.4	NO	4.6	1.9	STOP	NO	YES	YES	24	YES	YES	YELLOW	YES	YES	0	0	0	0	7	**0**	$ -	$ -	$ -	$ -	**$ -**	Crossing direction is E/W
473	6/16/2014	E MAIN ST & S JOHNS AVE	SE	Compliant	YES	YES	E/W	48	7.3	0.2	5.8	6.2	NO	YES	60	60	1.6	NO	4	1.2	STOP	YES	YES	YES	24	YES	YES	YELLOW	YES	YES	0	0	0	0	7	**0**	$ -	$ -	$ -	$ -	**$ -**	
498	6/16/2014	E MAIN ST & S HAYES AVE	SE	Compliant	YES	YES	N/S	48	8	0.7	6.9	4.4	NO	YES	48	63	1.7	NO	2.8	1.6	STOP	YES	YES	YES	24	YES	YES	RED	YES	YES	0	0	0	0	7	**0**	$ -	$ -	$ -	$ -	**$ -**	
502	6/16/2014	E MAIN ST & N HAYES AVE	NW	Compliant	YES	YES	N/S	48	7.3	0.5	6.1	5.6	NO	YES	48	54	0.7	NO	5	1.2	STOP	YES	YES	YES	24	YES	YES	RED	YES	YES	0	0	0	0	7	**0**	$ -	$ -	$ -	$ -	**$ -**	
514	6/16/2014	W MAIN ST & S BOISE AVE	NE	Compliant	YES	YES	N/S	48	8	0.4	6.6	7.1	NO	YES	48	64	2	NO	3.7	0.4	STOP	YES	YES	YES	24	YES	YES	RED	YES	YES	0	0	0	0	7	**0**	$ -	$ -	$ -	$ -	**$ -**	
516	6/16/2014	W MAIN ST & S BOISE AVE	SE	Compliant	YES	YES	E/W	48	6.4	0.3	0.8	4.3	NO	YES	64	52	1.7	NO	1.1	0.3	STOP	YES	YES	YES	27	YES	YES	RED	YES	YES	0	0	0	0	7	**0**	$ -	$ -	$ -	$ -	**$ -**	Crossing direction is E/W

Appendix C
No Ramp Locations Inventory

THIS PAGE INTENTIONALLY LEFT BLANK

GIS ID	CROSSING	LOC	NOTE	Priority	Location Score	Deficiency Score	Composite Score
76	12TH AND JOHNS	NW	NSNC	High	8	17	25
77	12TH AND JOHNS	SW	NSNC	High	8	17	25
81	FREEDOM AND REPUBLIC	NE	NRNS	High	8	17	25
82	FREEDOM AND REPUBLIC	SE	NRNS	High	8	17	25
83	RUDOLPH AND LIBERTY LN	NE	NRNS	High	8	17	25
86	FREEDOM AND CONSTITUTION	SE	NR	High	8	17	25
87	FREEDOM AND CONSTITUTION	NE	NR	High	8	17	25
88	RUDOLPH AND LIBERTY LN	NW	NR	High	8	17	25
89	INDEPENDENCE AND REPUBLIC	SE	NRNS	High	8	17	25
90	INDEPENDENCE AND REPUBLIC	SW	NR	High	8	17	25
91	FREEDOM AND CONSTITUTION	NW	NRNS	High	8	17	25
92	FREEDOM AND CONSTITUTION	SW	NRNS	High	8	17	25
93	CONSTITUTION AND INDEPENDENCE	SW	NRNS	High	8	17	25
94	INDEPENDENCE AND CONSTITUTION	NW	NRNS	High	8	17	25
95	CONSTITUTION AND INDEPENDENCE	SE	NR	High	8	17	25
96	INDEPENDENCE AND CONSTITUTION	NE	NR	High	8	17	25
71	PEACH AND HAWTHORNE	NE	NSNC	High	7.5	17	24.5
72	PEACH AND HAWTHORNE	SE	NSNC	High	7.5	17	24.5
73	JOHNS AND PEACH	NW	NSNC	High	7.5	17	24.5
74	JOHNS AND PEACH	SW	NSNC	High	7.5	17	24.5
75	LYNN AND JOHNS	SE	NRNS	High	7.5	17	24.5
78	12TH AND JUDD LN	SW	NSNC	High	7.5	17	24.5
97	HAYES AND 10TH	NE	NRNS	High	7.5	17	24.5
98	HAYES AND 10TH	SE	NSNC	High	7.5	17	24.5
99	HAYES AND 10TH	NW	NR	High	7.5	17	24.5
100	12TH AND HAYES	NE	NSNC	High	7.5	17	24.5
101	12TH AND HAYES	NW	NSNC	High	7.5	17	24.5
4	PARK PARKING LOT NW	SW	NR	High	7	17	24
5	WARDWELL AND DION	NW	NRNS	High	7	17	24
8	CANAL AND BOISE	NW	NR	High	7	17	24
9	CANAL AND BOISE	NE	NR	High	7	17	24
10	MAIN AND LINCOLN	SW	NRNC	High	7	17	24
11	5TH AND LINCOLN	NW	NR	High	7	17	24
12	5TH AND MURRAY	NE	NR	High	7	17	24
13	6TH AND LINCOLN	NW	NRNS	High	7	17	24
19	10TH AND COMMERCIAL	NW	NR	High	7	17	24
23	6TH AND HAWTHORNE	SW	NSNC	High	7	17	24
24	6TH AND HAWTHORNE	NW	NSNC	High	7	17	24
25	6TH AND HAWTHORNE	NE	NRNC	High	7	17	24
26	6TH AND HAWTHORNE	SE	NRNC	High	7	17	24
27	4TH AND MONTE VISTA DR	SW	NRNS	High	7	17	24
28	4TH AND MONTE VISTA DR	SE	NRNS	High	7	17	24
29	SHASTA AND MONTE VISTA DR	NW	NRNS	High	7	17	24
30	SHASTA AND MONTE VISTA DR	SW	NRNS	High	7	17	24
31	RAINIER AND SHASTA	SE	NRNS	High	7	17	24
32	RAINIER AND SHASTA	SW	NRNS	High	7	17	24
33	ROCKY ST AND RAINIER ST	NW	NRNS	High	7	17	24
35	ROCKY AND WHITNEY	NE	NRNS	High	7	17	24
37	SHASTA AND WHITNEY	SE	NRNS	High	7	17	24
38	SHASTA AND WHITNEY	SW	NRNS	High	7	17	24

GIS ID	CROSSING	LOC	NOTE	Priority	Location Score	Deficiency Score	Composite Score
46	SHASTA AND MONTE VISTA DR	NE	NRNS	High	7	17	24
47	MEADOW DR AND 4TH	SE	NRNS	High	7	17	24
48	MEADOW DR AND 4TH	SW	NRNS	High	7	17	24
49	5TH AND DECLARK	NW	NR	High	7	17	24
50	5TH AND DECLARK	NE	NR	High	7	17	24
51	5TH AND DECLARK	SW	NR	High	7	17	24
52	5TH AND DECLARK	SE	NR	High	7	17	24
53	DECLARK AND HAZEL	NW	NR	High	7	17	24
54	DECLARK AND HAZEL	SW	NR	High	7	17	24
55	5TH AND HAZEL	SW	NR	High	7	17	24
56	5TH AND HAZEL	SE	NR	High	7	17	24
57	5TH AND HAZEL	NE	NR	High	7	17	24
58	5TH AND HAZEL	NW	NR	High	7	17	24
59	3RD AND MCKINLEY	SW	NR	High	7	17	24
60	4TH AND MCKINLEY	SW	NR	High	7	17	24
61	5TH AND HAYES	SE	NSNC	High	7	17	24
62	4TH AND HAWTHORNE	SE	NRNS	High	7	17	24
63	5TH AND HAWTHORNE	NE	NSNC	High	7	17	24
64	JOHNS AND 4TH	SW	NSNC	High	7	17	24
65	JOHNS AND 5TH	NW	NSNC	High	7	17	24
66	6TH AND JOHNS	NW	NSNC	High	7	17	24
67	6TH AND JOHNS	SW	NSNC	High	7	17	24
69	7TH AND WARDWELL	SW	NSNC	High	7	17	24
70	7TH AND WARDWELL	NW	NSNC	High	7	17	24
102	12TH AND COMMERCIAL	NW	NRNS	High	7	17	24
103	12TH AND BOISE	NE	NRNS	High	7	17	24
104	12TH AND BOISE	NW	NSNC	High	7	17	24
105	12TH AND LINCOLN	NE	NSNC	High	7	17	24
106	12TH AND LINCOLN	NW	NRNS	High	7	17	24
116	3RD AND MURRAY	SW	NR	High	7	17	24
124	3RD AND MURRAY	SE	NSNC	High	7	17	24
125	3RD AND MURRAY	NE	NRNS	High	7	17	24
126	3RD AND LINCOLN	NW	NSNC	High	7	17	24
127	2ND AND LINCOLN	SW	NRNS	High	7	17	24
128	2ND AND LINCOLN	NW	NRNS	High	7	17	24
129	3RD AND LINCOLN	SW	NRNS	High	7	17	24
130	2ND AND MURRAY	NE	NR	High	7	17	24
131	2ND AND MURRAY	SE	NRNS	High	7	17	24
132	4TH AND LINCOLN	NW	NR	High	7	17	24
133	4TH AND LINCOLN	NE	NSNC	High	7	17	24
134	4TH AND LINCOLN	SE	NSNC	High	7	17	24
135	4TH AND BOISE	SW	NSNC	High	7	17	24
136	4TH AND BOISE	NW	NSNC	High	7	17	24
137	4TH AND BOISE	NE	NR	High	7	17	24
140	5TH AND MURRAY	NW	NSNC	High	7	17	24
141	5TH AND LINCOLN	SW	NSNC	High	7	17	24
142	6TH AND LINCOLN	SW	NRNS	High	7	17	24
143	6TH AND COMMERCIAL	NW	NSNC	High	7	17	24
144	6TH AND BOISE	NE	NRNC	High	7	17	24
145	6TH AND HAYES	NE	NSNC	High	7	17	24

GIS ID	CROSSING	LOC	NOTE	Priority	Location Score	Deficiency Score	Composite Score
146	10TH AND COMMERCIAL	NE	NSNC	High	7	17	24
147	10TH AND COMMERCIAL	SW	NRNS	High	7	17	24
148	10TH AND COMMERCIAL	SE	NSNC	High	7	17	24
154	1ST AND MURRAY	NE	NR	High	7	17	24
155	1ST AND MURRAY	SE	NR	High	7	17	24
156	1ST AND MURRAY	SW	NR	High	7	17	24
157	1ST AND MURRAY	NW	NR	High	7	17	24
161	1ST AND LINCOLN	NW	NRNS	High	7	17	24
162	1ST AND LINCOLN	SW	NSNC	High	7	17	24
163	MAIN AND LINCOLN	SE	NRNC	High	7	17	24
164	2ND AND LINCOLN	NE	NSNC	High	7	17	24
165	2ND AND LINCOLN	SE	NSNC	High	7	17	24
166	CANAL AND COMMERCIAL	NW	NR	High	7	17	24
168	DION - END	SE	NSNC	High	7	17	24
169	DION - END	NE	NSNC	High	7	17	24
170	MUSSER - END	SE	NSNC	High	7	17	24
171	MUSSER - END	NE	NSNC	High	7	17	24
172	BOISE - END	SE	NSNC	High	7	17	24
173	BOISE - END	NE	NSNC	High	7	17	24
182	MONROE AND RIVERSIDE	SW	NSNC	High	7	17	24
183	WALNUT AND MONROE	SE	NSNC	High	7	17	24
184	WALNUT AND MONROE	NE	NSNC	High	7	17	24
185	WALNUT AND RIVERSIDE	SW	NSNC	High	7	17	24
186	WALNUT AND RIVERSIDE	SE	NSNC	High	7	17	24
189	WARDWELL AND WALNUT	NE	NSNC	High	7	17	24
190	WARDWELL AND WALNUT	SE	NSNC	High	7	17	24
191	DION AND HAYES	SW	NSNC	High	7	17	24
192	DION AND HAYES	SE	NSNC	High	7	17	24
193	WARDWELL AND DION	SW	NSNC	High	7	17	24
194	PARK AND HAYES	SW	NR	High	7	17	24
195	PARK AND HAYES	NE	NRNC	High	7	17	24
196	7TH AND WARDWELL	NE	NSNC	High	7	17	24
197	3RD AND MCKINLEY	SE	NRNS	High	7	17	24
198	WARDWELL AND 3RD	SE	NRNS	High	7	17	24
199	3RD AND JOHNS	SW	NRNS	High	7	17	24
206	2ND AND DECLARK	SW	NSNC	High	7	17	24
207	2ND AND DECLARK	SE	NSNC	High	7	17	24
208	3RD AND DECLARK	NE	NRNS	High	7	17	24
209	3RD AND DECLARK	NW	NSNC	High	7	17	24
210	3RD AND DECLARK	SW	NRNC	High	7	17	24
211	3RD AND DECLARK	SE	NRNC	High	7	17	24
221	PHILLIPS AND PINE	SW	NSNC	High	7	17	24
222	PINE AND MAIN	NW	NRNC	High	7	17	24
226	MAIN AND MOFFAT	SE	NR	High	7	17	24
227	1ST AND MOFFAT	NE	NR	High	7	17	24
228	1ST AND MOFFAT	SE	NR	High	7	17	24
229	1ST AND MOFFAT	NW	NR	High	7	17	24
230	1ST AND MOFFAT	SW	NSNC	High	7	17	24
231	2ND AND MOFFAT	SW	NSNC	High	7	17	24
232	3RD AND MOFFAT	SE	NR	High	7	17	24

GIS ID	CROSSING	LOC	NOTE	Priority	Location Score	Deficiency Score	Composite Score
233	3RD AND MOFFAT	SW	NRNC	High	7	17	24
234	3RD AND MOFFAT	NW	NSNC	High	7	17	24
235	3RD AND MOFFAT	NE	NR	High	7	17	24
236	3RD AND BUTTE	NW	NR	High	7	17	24
237	3RD AND BUTTE	NE	NSNC	High	7	17	24
238	3RD AND BUTTE	SW	NRNC	High	7	17	24
239	2ND AND BUTTE	SE	NSNC	High	7	17	24
240	1ST AND BUTTE	SE	NR	High	7	17	24
241	1ST AND BUTTE	SW	NR	High	7	17	24
242	1ST AND BUTTE	NE	NRNS	High	7	17	24
243	1ST AND BUTTE	NW	NSNC	High	7	17	24
244	BUTTE AND MAIN	SE	NRNS	High	7	17	24
245	1ST AND PINE	NW	NRNC	High	7	17	24
246	PINE AND VISTA	SE	NR	High	7	17	24
247	2ND AND PINE	SW	NRNC	High	7	17	24
248	VISTA AND SUNNY LN	NW	NR	High	7	17	24
249	VISTA AND SUNNY LN	SW	NRNS	High	7	17	24
250	MAIN AND SUNNY LN	SW	NR	High	7	17	24
251	MAIN AND SUNNY LN	SE	NRNS	High	7	17	24
273	2ND AND WARDWELL	SW	NR	High	7	17	24
274	PINE AND 3RD	NW	NR	High	7	17	24
275	5TH AND HAWTHORNE	NW	NR	High	7	17	24
276	1ST AND JOHNS	SE	NR	High	7	17	24
279	MAIN AND JOHNS	NE	NR	High	7	17	24
280	MAIN AND JOHNS	NW	NR	High	7	17	24
281	PARK AND MCKINLEY	SW	NR	High	7	17	24
282	PARK AND MCKINLEY	SW	NR	High	7	17	24
283	PARK AND WARDWELL	NE	NR	High	7	17	24
284	PARK AND WARDWELL	NE	NR	High	7	17	24
285	PARK AND WARDWELL	NW	NRNC	High	7	17	24
286	PARK AND WARDWELL	NW	NSNC	High	7	17	24
287	PARK AND WARDWELL	SE	NR	High	7	17	24
288	5TH AND COMMERCIAL	SE	NRNC	High	7	17	24
289	2ND AND JOHNS	SW	NR	High	7	17	24
290	2ND AND JOHNS	SW	NR	High	7	17	24
20	LYNN AND 7TH	SE	NRNS	High	6	17	23
21	LYNN AND 7TH	SW	NRNS	High	6	17	23
22	JOHNS AND 7TH	SW	NRNS	High	6	17	23
68	7TH AND MCKINLEY	SE	NSNC	High	6	17	23
79	CONSTITUTION AND LIBERTY	NW	NRNS	High	6	17	23
80	CONSTITUTION AND LIBERTY	SW	NRNS	High	6	17	23
1	PARK AND PINE	NW	NR	High	5.5	17	22.5
2	PARK AND MOFFAT	NW	NR	High	5.5	17	22.5
3	PARK AND DECLARK	SE	NRNC	High	5.5	17	22.5
107	12TH AND WILLIAMS	NE	NRNS	High	5.5	17	22.5
108	HIGH SCHOOL AND 12TH	NW	NR	High	5.5	17	22.5
109	HIGH SCHOOL AND 12TH	SW	NR	High	5.5	17	22.5
110	12TH AND JOHNSON	NE	NRNS	High	5.5	17	22.5
111	12TH AND JOHNSON	NW	NRNS	High	5.5	17	22.5
112	HIGH SCHOOL AND 12TH	NE	NRNS	High	5.5	17	22.5

GIS ID	CROSSING	LOC	NOTE	Priority	Location Score	Deficiency Score	Composite Score
115	2ND AND MCAULIFFE	SE	NR	High	5.5	17	22.5
117	2ND AND MCAULIFFE	NE	NRNS	High	5.5	17	22.5
118	2ND AND WILSON	NE	NSNC	High	5.5	17	22.5
158	1ST AND WILSON	NW	NR	High	5.5	17	22.5
159	1ST AND WILSON	NE	NSNC	High	5.5	17	22.5
160	1ST AND WILSON	SE	NSNC	High	5.5	17	22.5
181	RIVERSIDE AND JOHNS	SW	NRNC	High	5.5	17	22.5
200	LOCUST AND DECLARK	SE	NRNC	High	5.5	17	22.5
201	TERRY DR AND DECLARK	NW	NSNC	High	5.5	17	22.5
202	TERRY DR AND DECLARK	SW	NRNS	High	5.5	17	22.5
218	BLAINE AND PINE	SW	NRNS	High	5.5	17	22.5
219	PARK AND PINE	SW	NSNC	High	5.5	17	22.5
220	PHILLIPS AND PINE	NW	NSNC	High	5.5	17	22.5
223	PARK AND MOFFAT	SW	NSNC	High	5.5	17	22.5
224	PHILLIPS AND MOFFAT	SW	NSNC	High	5.5	17	22.5
254	PARK AND RIGGS	NW	NR	High	5.5	17	22.5
256	BASQUE AND RIGGS	NE	NR	High	5.5	17	22.5
257	BASQUE AND RIGGS	SE	NR	High	5.5	17	22.5
258	BLAINE AND RIGGS	NE	NR	High	5.5	17	22.5
259	BLAINE AND RIGGS	NW	NR	High	5.5	17	22.5
270	BUTTE AND LOCUST	NW	NR	High	5.5	17	22.5
271	MOFFAT AND LOCUST	NW	NRNS	High	5.5	17	22.5
14	4TH AND WILLIAMS	SE	NR	High	5	17	22
15	4TH AND WILSON	NW	NR	High	5	17	22
16	3RD AND WILSON	SW	NRNC	High	5	17	22
36	ROCKY AND WHITNEY	NW	NRNS	High	5	17	22
39	ROCKY AND SHASTA	NE	NRNS	High	5	17	22
120	4TH AND WILSON	NE	NSNC	High	5	17	22
123	3RD AND WILSON	SE	NSNC	High	5	17	22
138	5TH AND WILLIAMS	NE	NSNC	High	5	17	22
139	5TH AND WILLIAMS	SE	NSNC	High	5	17	22
151	4TH AND WILLIAMS	SW	NSNC	High	5	17	22
152	4TH AND MURRAY	SE	NR	High	5	17	22
153	4TH AND MURRAY	NE	NSNC	High	5	17	22
174	BARTON AND BOISE	NW	NSNC	High	5	17	22
179	RIVERSIDE AND N HAYES	NW	NSNC	High	5	17	22
180	RIVERSIDE AND N HAYES	NE	NSNC	High	5	17	22
187	WARDWELL AND RIVERSIDE	NE	NSNC	High	5	17	22
188	WARDWELL AND RIVERSIDE	SE	NSNC	High	5	17	22
203	1ST AND DECLARK	NE	NR	High	5	17	22
204	1ST AND DECLARK	SE	NSNC	High	5	17	22
205	1ST AND DECLARK	SW	NSNC	High	5	17	22
212	2ND AND HAZEL	SW	NSNC	High	5	17	22
213	2ND AND HAZEL	SE	NSNC	High	5	17	22
214	3RD AND HAZEL	NW	NRNS	High	5	17	22
215	3RD AND HAZEL	NE	NSNC	High	5	17	22
225	MAIN AND MOFFAT	SW	NRNC	High	5	17	22
277	MAIN AND DECLARK	SE	NRNC	High	5	17	22
278	MAIN AND DECLARK	SW	NRNC	High	5	17	22
84	CONSTITUTION AND LIBERTY	NE	NR	High	4.5	17	21.5

GIS ID	CROSSING	LOC	NOTE	Priority	Location Score	Deficiency Score	Composite Score
85	CONSTITUTION AND LIBERTY	SE	NR	High	4.5	17	21.5
216	12TH AND MOFFAT	NW	NSNC	High	4.5	17	21.5
217	12TH AND MOFFAT	NE	NSNC	High	4.5	17	21.5
45	SHASTA AND CASCADE	SW	NRNS	High	4	17	21
260	SHADOW RIDGE AND RIGGS	NE	NR	High	4	17	21
261	SHADOW RIDGE AND RIGGS	SE	NR	High	4	17	21
262	BUTTE VIEW AND RIGGS	NW	NR	High	4	17	21
263	BUTTE VIEW AND RIGGS	SW	NR	High	4	17	21
264	BUTTE SHADOW AND RIGGS	NE	NR	High	4	17	21
265	BUTTE SHADOW AND RIGGS	SE	NR	High	4	17	21
266	LORAINE CIR AND RIGGS	SW	NR	High	4	17	21
267	LORAINE CIR AND RIGGS	NW	NR	High	4	17	21
268	RIGGS AND FERNLEE	SW	NR	High	4	17	21
269	RIGGS AND FERNLEE	NE	NR	High	4	17	21
272	FERNLEE AND BUTTE	SW	NRNS	High	4	17	21
6	OXLEY AND COMMERCIAL	SE	NSNC	High	3.5	17	20.5
7	CARSON AND BOISE	SE	NSNC	High	3.5	17	20.5
34	ROCKY ST AND RAINIER ST	SW	NRNS	High	3.5	17	20.5
40	ROCKY AND SHASTA	SE	NRNS	High	3.5	17	20.5
41	SHASTA AND CASCADE	NE	NRNS	High	3.5	17	20.5
42	SHASTA AND CASCADE	NW	NRNS	High	3.5	17	20.5
43	RAINIER AND CASCADE	NW	NRNS	High	3.5	17	20.5
44	RAINIER AND CASCADE	NE	NRNS	High	3.5	17	20.5
119	4TH AND MCAULIFFE	NE	NRNS	High	3.5	17	20.5
121	3RD AND MCAULIFFE	SE	NRNS	High	3.5	17	20.5
122	3RD AND MCAULIFFE	NE	NR	High	3.5	17	20.5
149	WILLIAMS AND 6TH	NW	NSNC	High	3.5	17	20.5
150	WILLIAMS AND 6TH	SW	NSNC	High	3.5	17	20.5
167	CARSON AND BOISE	NE	NSNC	High	3.5	17	20.5
175	OXLEY AND BOISE	SW	NSNC	High	3.5	17	20.5
176	OXLEY AND BOISE	SE	NSNC	High	3.5	17	20.5
177	OXLEY AND COMMERCIAL	SW	NSNC	High	3.5	17	20.5
178	OXLEY AND BOISE	NE	NSNC	High	3.5	17	20.5
252	MAIN AND ERICKSON	SW	NRNS	High	3.5	17	20.5
253	PHILLIPS AND RIGGS	NW	NR	High	3.5	17	20.5
255	PARK AND RIGGS	SW	NR	High	3.5	17	20.5
17	4TH AND MAIN	SW	NR	High	2	17	19
114	4TH AND MAIN	NE	NSNC	High	2	17	19
18	MAIN ST AND 4TH AND DITMAN	W	NR	High	0	17	17
113	MAIN ST AND 4TH AND DITMAN	E	NSNC	High	0	17	17

Appendix D
ITD Standard ADA Drawings

THIS PAGE INTENTIONALLY LEFT BLANK

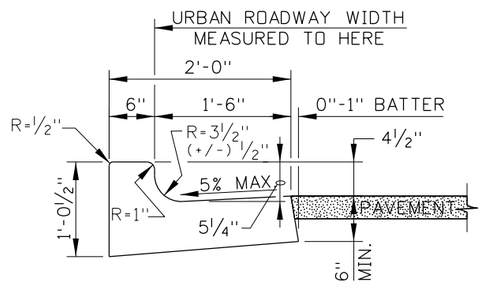

SECTION 2-A

GUTTER PAN SLOPE REDUCED FOR A.D.A. RAMP

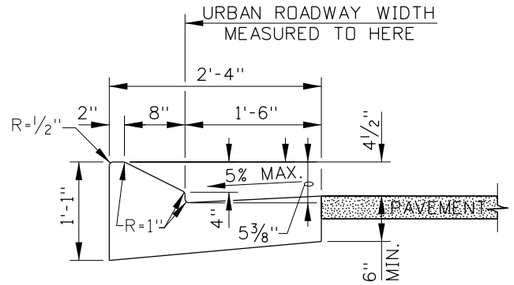

SECTION 5-A

GUTTER PAN SLOPE REDUCED FOR A.D.A. RAMP

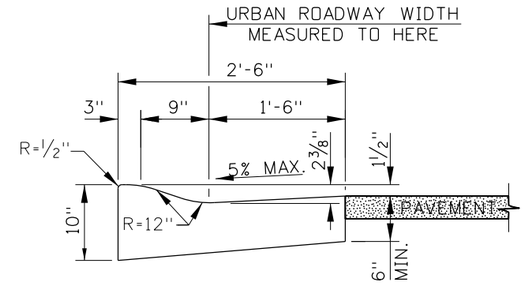

SECTION 9-A

GUTTER PAN SLOPE REDUCED FOR A.D.A. RAMP

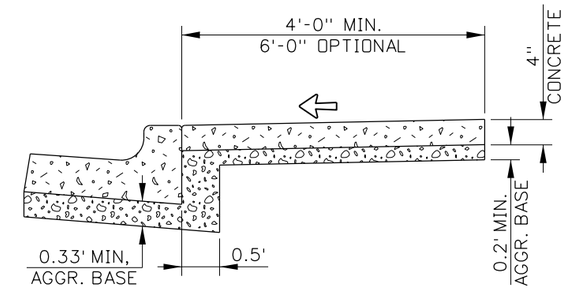

ATTACHED CONCRETE SIDEWALK

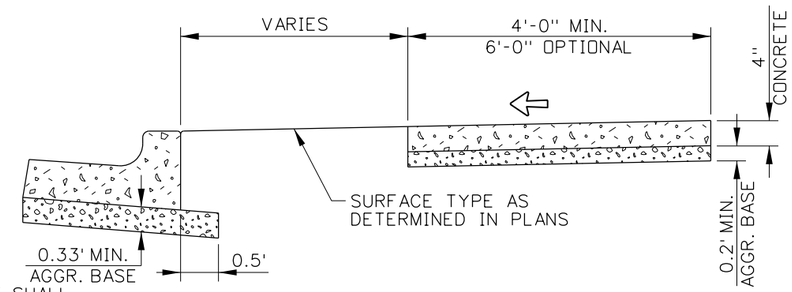

DETACHED CONCRETE SIDEWALK

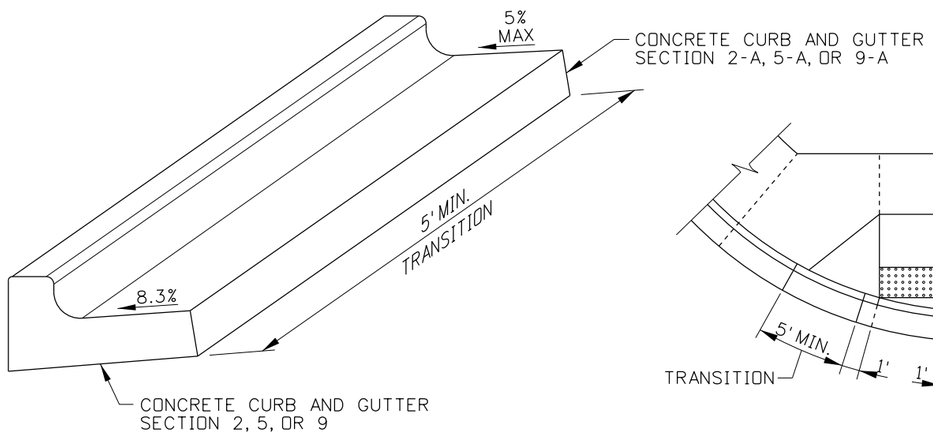

ISOMETRIC VIEW

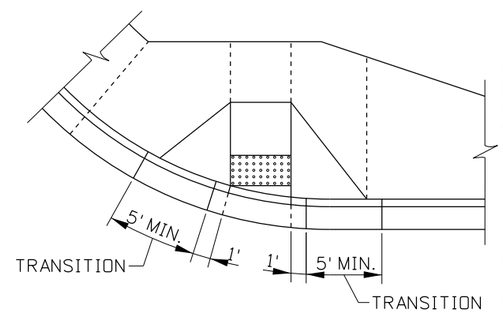

PLAN

CURB AND GUTTER TRANSITION AT A.D.A. PEDESTRIAN RAMP DETAIL

SIDEWALK NOTES

1. AN APPROVED BOND PREVENTIVE SHALL BE PROVIDED BETWEEN THE SIDEWALK AND CURB WHEN PLACED ADJACENT TO EACH OTHER. WHEN CONSTRUCTING NEW SIDEWALK ADJACENT TO EXISTING CURB OR SIDEWALK, THE NEW JOINTS SHALL FALL IN THE SAME SEQUENCE AS THE EXISTING.
2. A PREFORMED EXPANSION JOINT FILLER SHALL BE PLACED IN THE SIDEWALK AND NOT THE CURB RAMP CONSTRUCTION. EXPANSION JOINT FILLER SHALL BE PLACED EVERY 40' FOR NEW SIDEWALK CONSTRUCTION.
3. SIDEWALK CONSTRUCTION JOINTS SHALL BE CONSTRUCTED AT 5' SPACING, APPROXIMATELY 1/8" WIDE, 3/4" IN DEPTH, AND FINISHED AND EDGED SMOOTH.
4. COMBINATION CURB AND GUTTER SECTION 2 IS SHOWN IN THE DRAWING DETAILS. FOR OTHER CURB TYPES, REFER TO STD. DWG. H-1-A (CURBS, GUTTERS, TRAFFIC SEPARATORS, AND RAISED CHANNELIZATION END TREATMENT).
5. SIDEWALKS IN PEDESTRIAN ACCESS ROUTES THAT ARE LESS THAN 5.0' IN CLEAR WIDTH SHALL PROVIDE PASSING SPACES AT INTERVALS OF 200' MAXIMUM. PEDESTRIAN ACCESS ROUTES AT PASSING SPACES SHALL BE 5.0' WIDE FOR A DISTANCE OF 5.0' MIN.

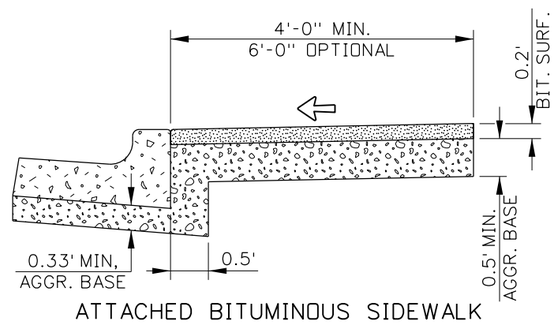

ATTACHED BITUMINOUS SIDEWALK

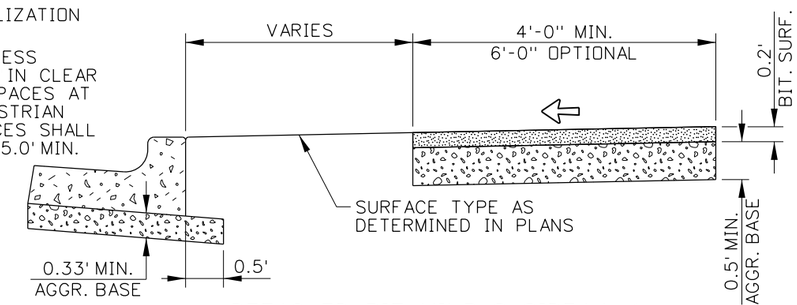

DETACHED BITUMINOUS SIDEWALK

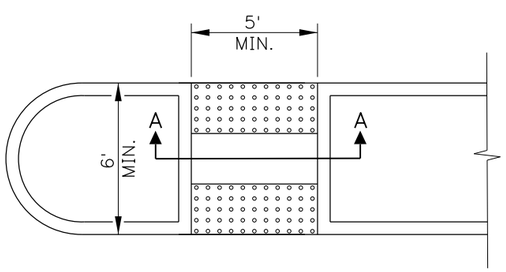

PLAN

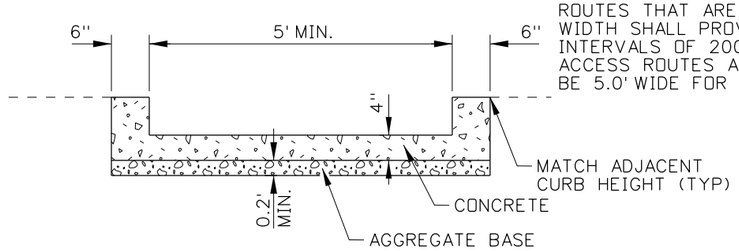

SECTION A-A

MEDIAN ISLAND DETAIL

LEGEND

⇦ 1.5% ± 0.5% (2% MAX) SLOPE

ORIGINAL STORED AT: ITD, Headquarters 3311 West State Boise, Idaho

ORIGINAL SIGNED BY: RYAN SCOT CARNIE DATE ORIGINAL SIGNED: AUGUST 26, 2011

REVISIONS								
NO.	DATE	BY	NO.	DATE	BY	NO.	DATE	BY
1	08-11	RSC						

SCALES SHOWN ARE FOR 11" X 17" PRINTS ONLY

CADD FILE NAME: h1b_0811.std

DRAWING DATE: JULY, 2010

IDAHO TRANSPORTATION DEPARTMENT

BOISE IDAHO

ORIGINAL SIGNED BY: LOREN THOMAS
HIGHWAYS PROGRAM OVERSIGHT ENGINEER
ORIGINAL SIGNED BY: TOM COLE
CHIEF ENGINEER

STANDARD DRAWING

SIDEWALKS, ISLANDS, AND A.D.A. CURB & GUTTERS

English

STANDARD DRAWING NO.

H-1-B

SHEET 1 OF 1

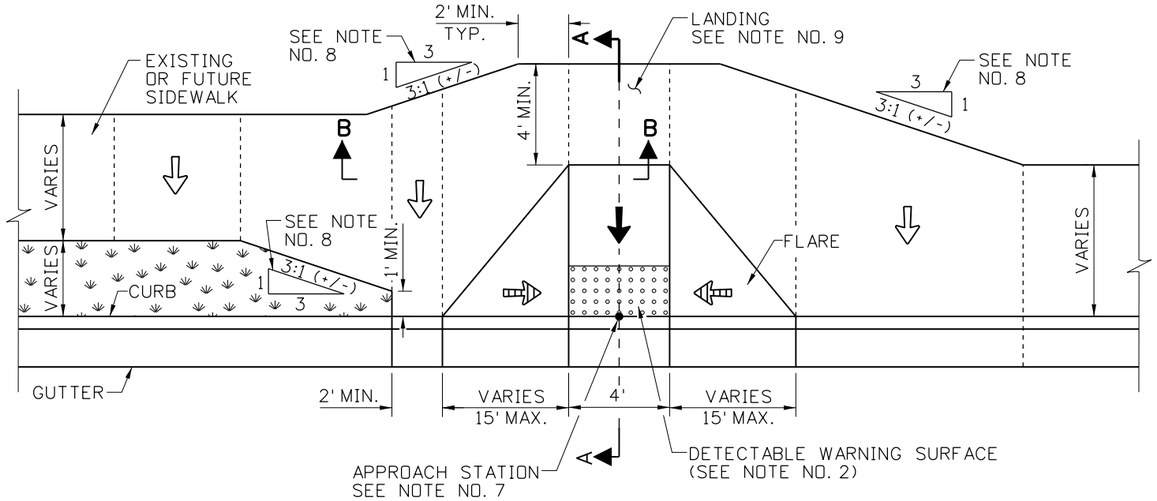

PLAN

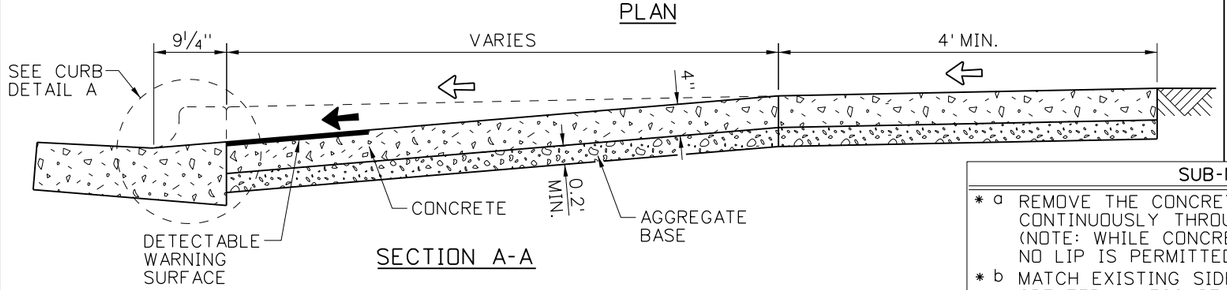

SECTION A-A

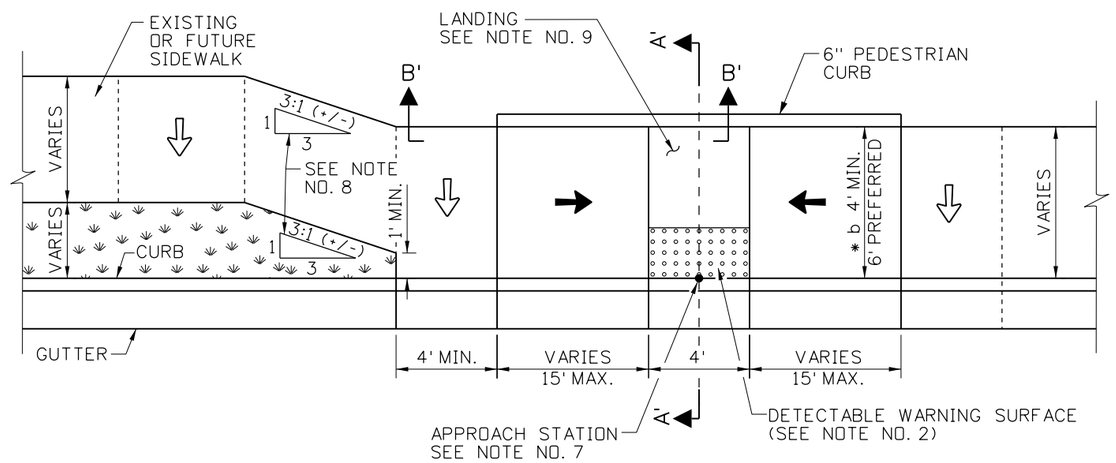

PLAN

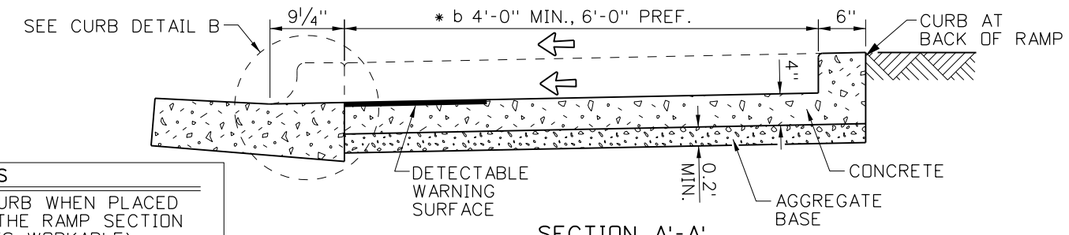

SECTION A'-A'

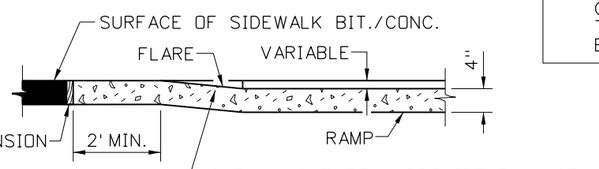

SECTION B-B

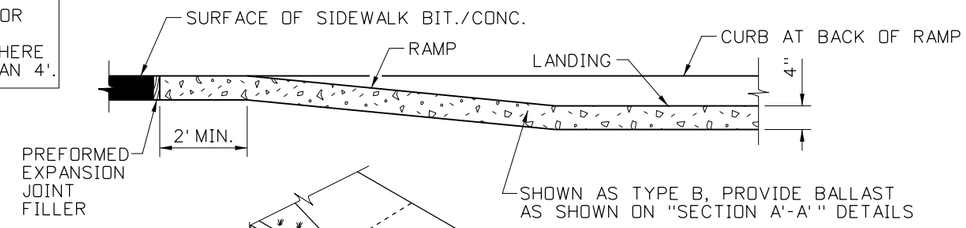

SECTION B'-B'

SUB-NOTES

* a REMOVE THE CONCRETE CURB WHEN PLACED CONTINUOUSLY THROUGH THE RAMP SECTION (NOTE: WHILE CONCRETE IS WORKABLE). NO LIP IS PERMITTED IN THE RAMP.
* b MATCH EXISTING SIDEWALK WIDTHS OF 4' OR GREATER, UNLESS OTHERWISE NOTED. TRANSITION TO A MINIMUM OF 4' WIDTH WHERE EXISTING SIDEWALK WIDTHS ARE LESS THAN 4'.

LEGEND

- 1.5% ± 0.5% (2% MAX) SLOPE
- 7.3% ± 1.0% (8.3% MAX) SLOPE (SEE NOTE 14)
- 9.0% ± 1.0% (10.0% MAX) SLOPE

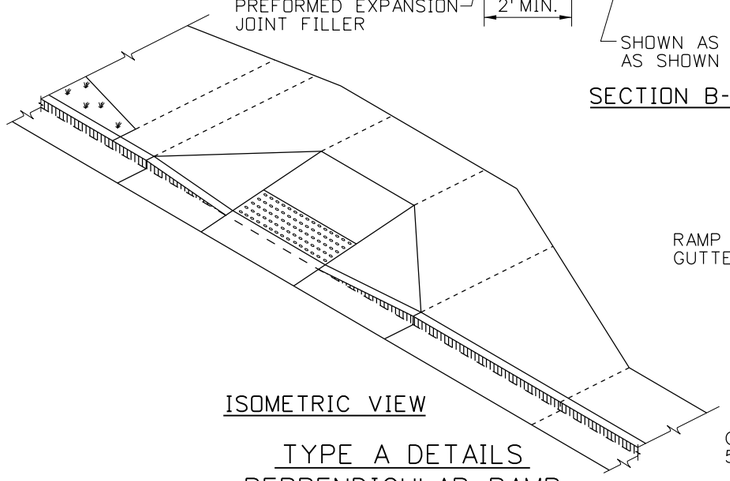

ISOMETRIC VIEW

TYPE A DETAILS
PERPENDICULAR RAMP

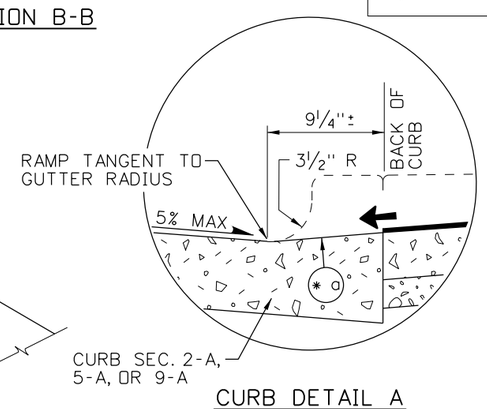

CURB DETAIL A

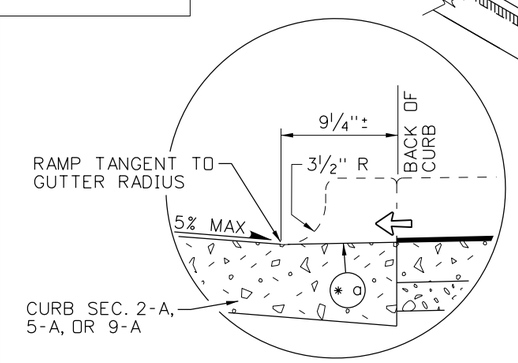

CURB DETAIL B

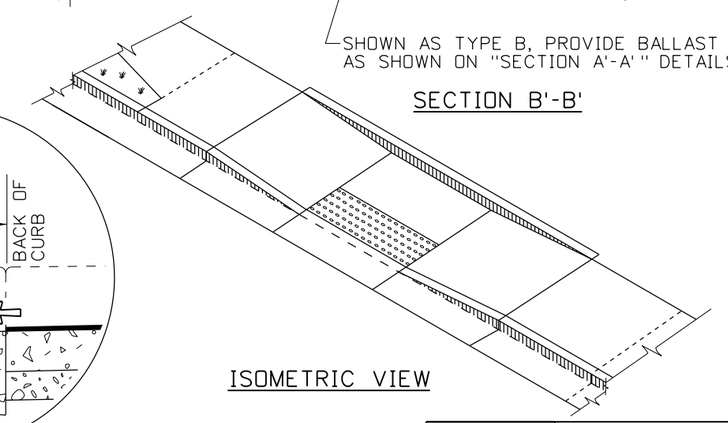

ISOMETRIC VIEW

TYPE B DETAILS
PARALLEL RAMP

ORIGINAL STORED AT: ITD, Headquarters 3311 West State Boise, Idaho

ORIGINAL SIGNED BY: TED E. MASON DATE ORIGINAL SIGNED: OCTOBER 5, 2011

REVISIONS								
NO.	DATE	BY	NO.	DATE	BY	NO.	DATE	BY
1	9-93	MSM	6	7-03	MSM	11	7-10	JAW
2	12-95	MSM	7	12-04	MSM	12	9-11	TEM
3	6-98	MSM	8	6-05	MSM			
4	8-01	MSM	9	5-06	MSM			
5	10-02	MSM	10	5-07	MSM			

SCALES SHOWN ARE FOR 11" X 17" PRINTS ONLY

CADD FILE NAME: h2a_1011.dgn

DRAWING DATE: JUNE, 1990

IDAHO TRANSPORTATION DEPARTMENT

BOISE IDAHO

ORIGINAL SIGNED BY: LOREN THOMAS
HIGHWAYS PROGRAM OVERSIGHT ENGINEER
ORIGINAL SIGNED BY: TOM COLE
CHIEF ENGINEER

STANDARD DRAWING

SIDEWALKS & A.D.A. FACILITIES: NEW CONSTRUCTION

REQUIRES SHEET 2 OF 4, 3 OF 4, 4 OF 4 & STD. DWG. H-3

English

STANDARD DRAWING NO.

H-2-A

SHEET 1 OF 4

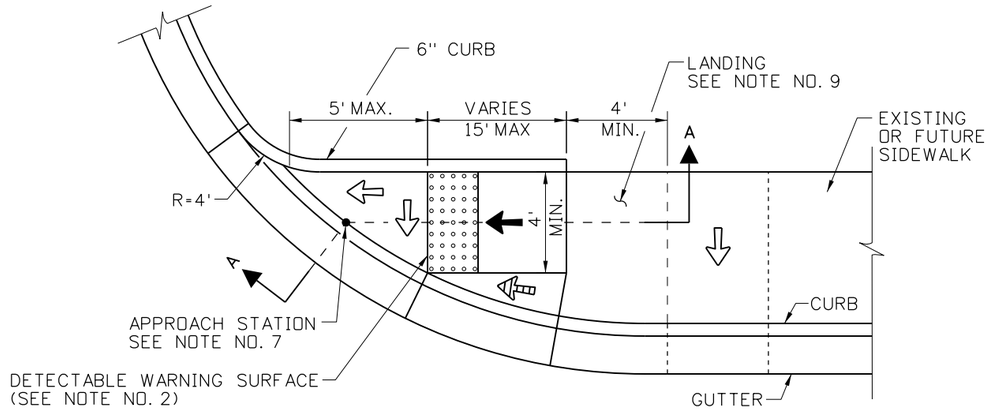

PLAN

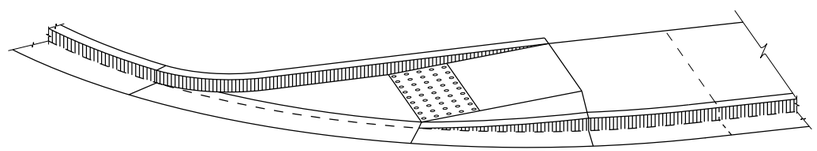

ISOMETRIC VIEW

TYPE C1 DETAILS
SKEWED RAMP WITH CURB AND FLARE

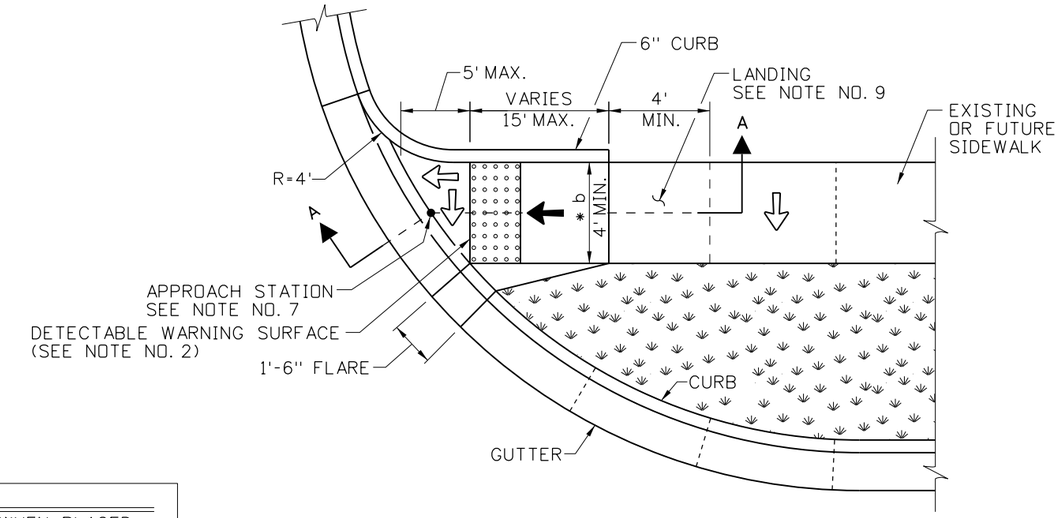

PLAN

SUB-NOTES

* a REMOVE THE CONCRETE CURB WHEN PLACED CONTINUOUSLY THROUGH THE RAMP SECTION (NOTE: WHILE CONCRETE IS WORKABLE). NO LIP IS PERMITTED IN THE RAMP.
* b MATCH EXISTING SIDEWALK WIDTHS OF 4' OR GREATER, UNLESS OTHERWISE NOTED. TRANSITION TO A MINIMUM OF 4' WIDTH WHERE EXISTING SIDEWALK WIDTHS ARE LESS THAN 4'.

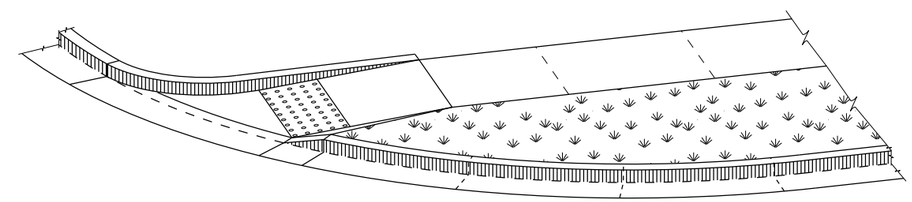

ISOMETRIC VIEW

TYPE C2 DETAILS
SKEWED RAMP WITH CURB AND FLARE

LEGEND

- 1.5% ± 0.5% (2% MAX) SLOPE
- 7.3% ± 1.0% (8.3% MAX) SLOPE (SEE NOTE 14)
- 9.0% ± 1.0% (10.0% MAX) SLOPE

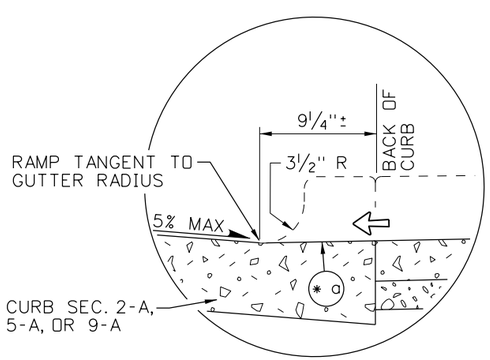

CURB DETAIL B

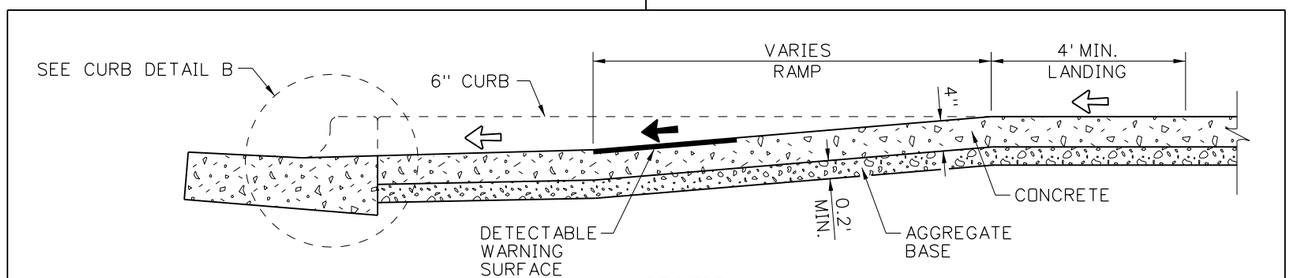

SECTION A-A

ORIGINAL STORED AT: ITD, Headquarters 3311 West State Boise, Idaho

ORIGINAL SIGNED BY: TED E. MASON DATE ORIGINAL SIGNED: OCTOBER 5, 2011

REVISIONS								
NO.	DATE	BY	NO.	DATE	BY	NO.	DATE	BY
1	9-93	MSM	6	7-03	MSM	11	7-10	JAW
2	12-95	MSM	7	12-04	MSM	12	9-11	TEM
3	6-98	MSM	8	6-05	MSM			
4	8-01	MSM	9	5-06	MSM			
5	10-02	MSM	10	5-07	MSM			

SCALES SHOWN ARE FOR 11" X 17" PRINTS ONLY

CADD FILE NAME: h2a_1011.dgn

DRAWING DATE: JUNE, 1990

IDAHO TRANSPORTATION DEPARTMENT

BOISE IDAHO

ORIGINAL SIGNED BY: LOREN THOMAS
HIGHWAYS PROGRAM OVERSIGHT ENGINEER
ORIGINAL SIGNED BY: TOM COLE
CHIEF ENGINEER

STANDARD DRAWING

SIDEWALKS & A.D.A. FACILITIES: NEW CONSTRUCTION

REQUIRES SHEET 1 OF 4, 3 OF 4, 4 OF 4 & STD. DWG. H-3

English

STANDARD DRAWING NO.

H-2-A

SHEET 2 OF 4

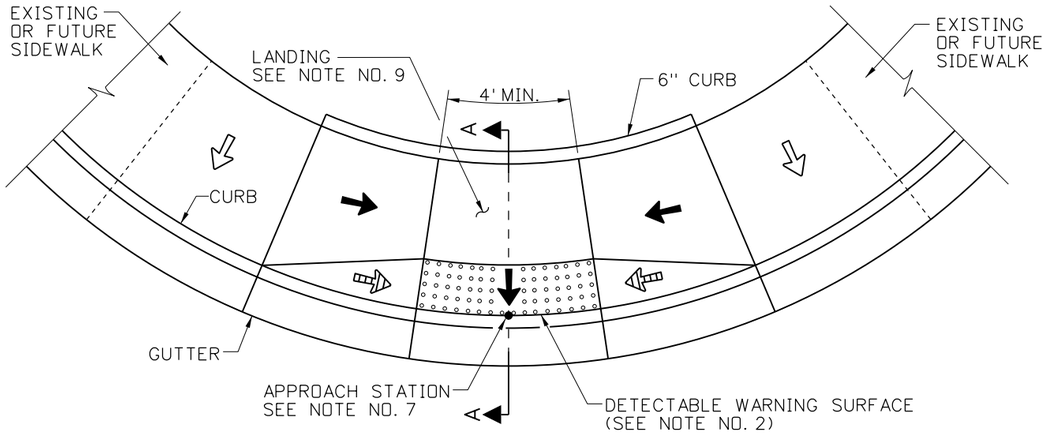

PLAN

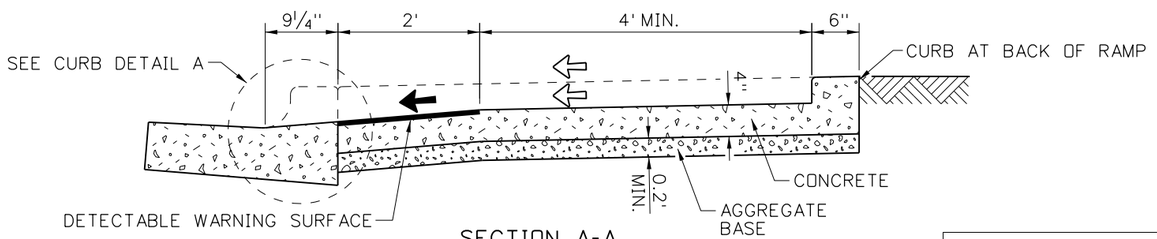

SECTION A-A

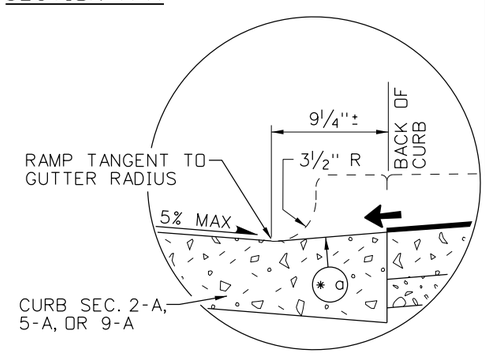

CURB DETAIL A

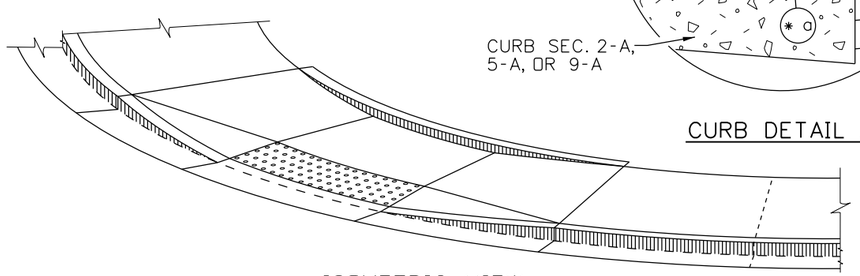

ISOMETRIC VIEW

TYPE D DETAILS
COMBINATION RAMP

SUB-NOTES
* a REMOVE THE CONCRETE CURB WHEN PLACED CONTINUOUSLY THROUGH THE RAMP SECTION (NOTE: WHILE CONCRETE IS WORKABLE). NO LIP IS PERMITTED IN THE RAMP.
* b MATCH EXISTING SIDEWALK WIDTHS OF 4' OR GREATER, UNLESS OTHERWISE NOTED. TRANSITION TO A MINIMUM OF 4' WIDTH WHERE EXISTING SIDEWALK WIDTHS ARE LESS THAN 4'.

LEGEND

- 1.5% ± 0.5% (2% MAX) SLOPE
- 7.3% ± 1.0% (8.3% MAX) SLOPE (SEE NOTE 14)
- 9.0% ± 1.0% (10.0% MAX) SLOPE

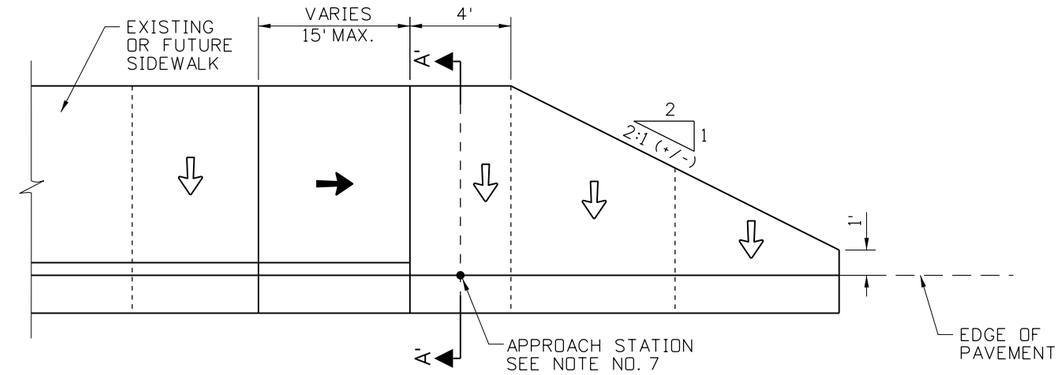

PLAN

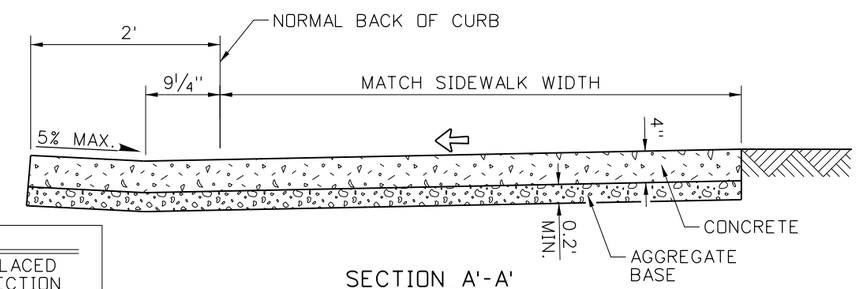

SECTION A'-A'

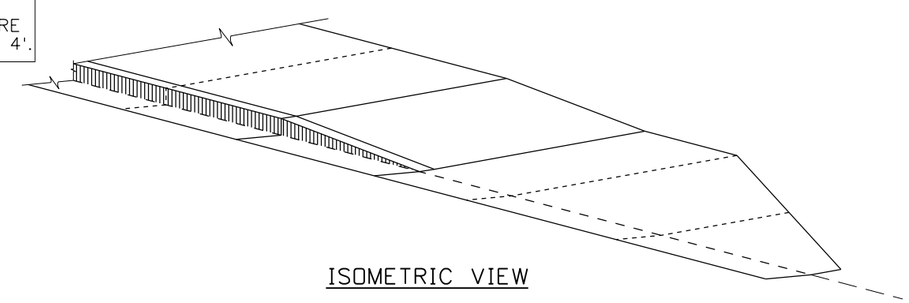

ISOMETRIC VIEW

TYPE E DETAILS
SIDEWALK TERMINATION RAMP

ORIGINAL STORED AT: ITD, Headquarters 3311 West State Boise, Idaho

ORIGINAL SIGNED BY: TED E. MASON DATE ORIGINAL SIGNED: OCTOBER 5, 2011

REVISIONS								
NO.	DATE	BY	NO.	DATE	BY	NO.	DATE	BY
1	9-93	MSM	6	7-03	MSM	11	7-10	JAW
2	12-95	MSM	7	12-04	MSM	12	9-11	TEM
3	6-98	MSM	8	6-05	MSM			
4	8-01	MSM	9	5-06	MSM			
5	10-02	MSM	10	5-07	MSM			

SCALES SHOWN ARE FOR 11" X 17" PRINTS ONLY

CADD FILE NAME: h2a_1011.dgn

DRAWING DATE: JUNE, 1990

IDAHO TRANSPORTATION DEPARTMENT

BOISE IDAHO

ORIGINAL SIGNED BY: LOREN THOMAS
HIGHWAYS PROGRAM OVERSIGHT ENGINEER
ORIGINAL SIGNED BY: TOM COLE
CHIEF ENGINEER

STANDARD DRAWING

SIDEWALKS & A.D.A. FACILITIES: NEW CONSTRUCTION

REQUIRES SHEET 1 OF 4, 4 OF 4, 4 OF 4 & STD. DWG. H-3

English

STANDARD DRAWING NO.

H-2-A

SHEET 3 OF 4

SUB-NOTES

* c TRUNCATED DOME SPACING MAY VARY 1.6" TO 2.4", BUT THE UP-DOWN SPACING SHALL EQUAL THE LEFT-RIGHT SPACING.

LEGEND

- 1.5% ± 0.5% (2% MAX) SLOPE
- 7.3% ± 1.0% (8.3% MAX) SLOPE (SEE NOTE 14)
- 9.0% ± 1.0% (10.0% MAX) SLOPE

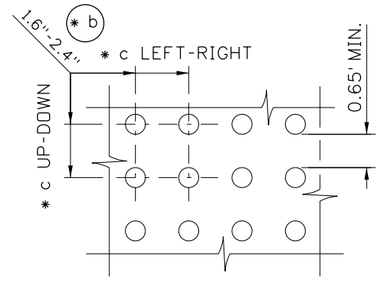

DOME SPACING

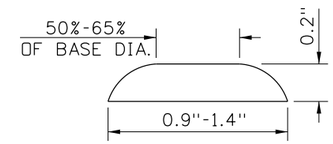

DOME DIMENSIONS

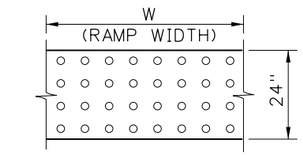

RAMP INSTALLATION

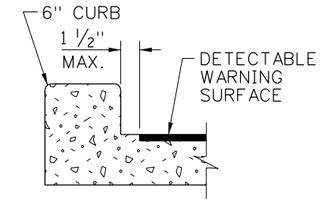

SECTION A-A

DETECTABLE WARNING SURFACE PLACEMENT ADJACENT TO RETURN CURBS

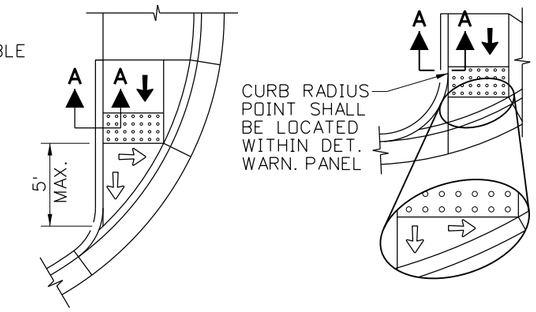

SKEWED RAMP INSTALLATION

DETECTABLE WARNING SURFACE DETAILS

TRUNCATED DOMES
(SEE NOTE NO. 2)

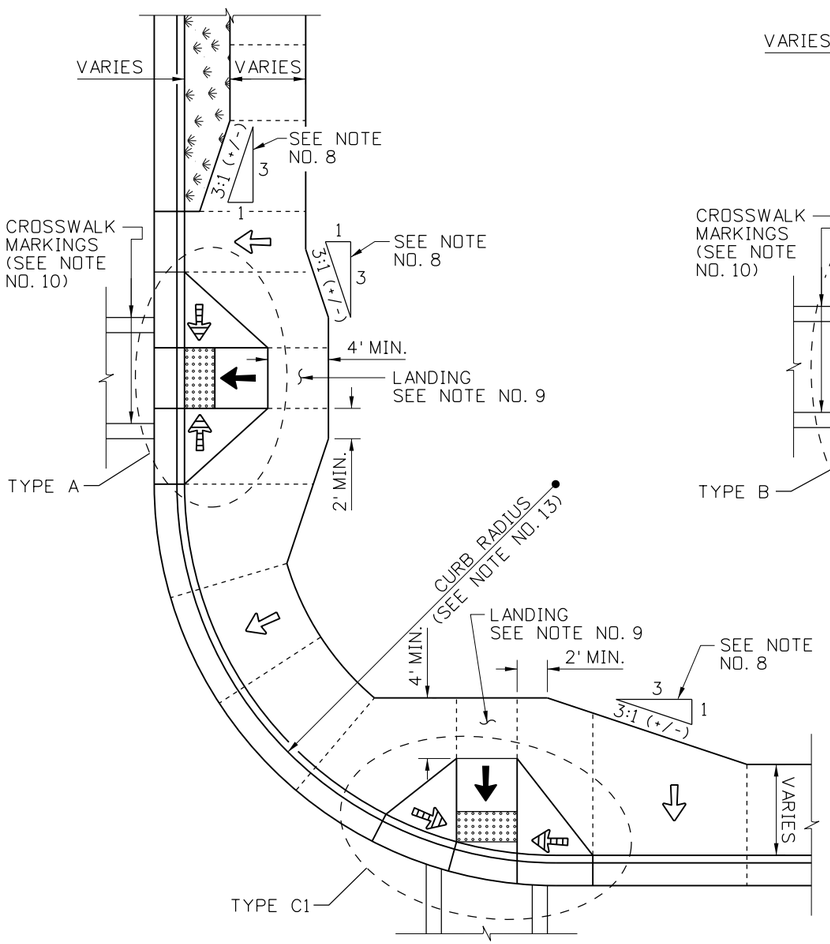

LAYOUT OPTIONS: RAMP TYPES A & C

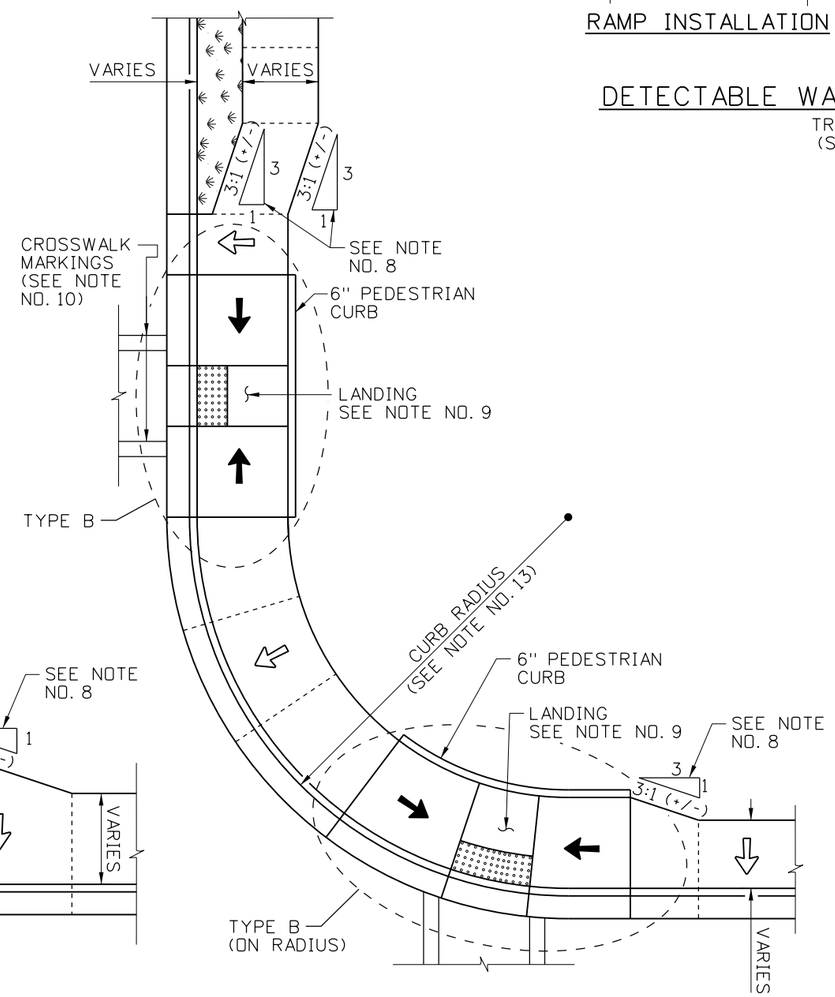

LAYOUT OPTIONS: RAMP TYPE B

GENERAL NOTES

1. TYPE A & B RAMPS SHALL NOT BE SKEWED AND THE RAMP AXIS SHALL BE PERPENDICULAR TO THE CURB LINE.
2. THE DETECTABLE WARNING SURFACE SHALL BE INSTALLED 24" DEEP ALONG THE FULL WIDTH OF THE PEDESTRIAN RAMP. AT LEAST ONE CORNER OF THE LEADING EDGE OF THE DETECTABLE WARNING SURFACE SHALL BE NO MORE THAN 8" FROM FLOW LINE OR NORMAL FACE OF CURB. THE DETECTABLE WARNING SURFACE SHALL BE SELECTED FROM THE IDAHO TRANSPORTATION DEPARTMENT'S QUALIFIED PRODUCTS LIST AND INSTALLED BY A MANUFACTURER'S TRAINED CRAFTSMAN. STAMPED CONCRETE DOMES ARE NOT ALLOWED.
3. RAMPS SHALL NOT HAVE ANY UTILITIES OR STRUCTURES WITHIN THE FLARE(S), RAMP(S), OR LANDING(S).
4. FINISH CONCRETE WITH A COARSE BROOM SURFACE PERPENDICULAR TO THE SLOPE IN RAMP, LANDING, AND FLARE AREAS.
5. PLACE PREFORMED EXPANSION JOINT FILLER BETWEEN URBAN APPROACH CONSTRUCTION AND OTHER CONCRETE POURS. REFER TO STD. DWG. H-1-B FOR DETAILS ON SIDEWALK CONSTRUCTION ADJACENT TO THE APPROACH.
6. CORNER CURB RADII, PEDESTRIAN TRAFFIC, AND VEHICLE TRAFFIC NEEDS MUST BE ADDRESSED WHEN INSTALLING CROSSWALKS FOR URBAN APPROACHES AT INTERSECTIONS.
7. AN APPROACH DESCRIPTION AS SHOWN ON THE PLANS, SHOULD INCLUDE A STATION, AN OFFSET (RIGHT OR LEFT) TO BACK OF CURB, AND THE WIDTH, "W", OF THE APPROACH.
8. USE A MINIMUM 3:1 (+/-) OR AN AESTHETICALLY PLEASING TAPER IN FROM THE EDGE OF NEW OR EXISTING SIDEWALK TO THE BACK OF THE RAMP OR LANDING AREAS.
9. LANDINGS SHALL HAVE ABSOLUTE MINIMUM DIMENSIONS OF 4' x 4' AND ABSOLUTE MAXIMUM SLOPES OF 2% IN ALL DIRECTIONS.
10. RAMPS SHALL NOT HAVE A CATCH BASIN OR DROP INLET WITHIN 4' OF A TYPE B OR E RAMP OR WITHIN 2' OF A TYPE A, C1, C2, OR D RAMP.
11. GRADE BREAKS SHALL BE ANGULAR AND DISTINCT.
12. REFER TO THE "MANUAL ON UNIFORM TRAFFIC CONTROL DEVICES" (MUTCD) FOR PLACEMENT OF APPROACH CROSSWALK MARKINGS AND VEHICLE STOP BARS.
13. REFER TO AASHTO "A POLICY ON GEOMETRIC DESIGN OF HIGHWAYS AND STREETS" FOR CURB RADII AND APPROACH GEOMETRIC REQUIREMENTS.
14. LIMIT CROSS SLOPES ON RAMPS TO A MAXIMUM OF 2%.
15. NOT TO SCALE.

ORIGINAL STORED AT: ITD, Headquarters 3311 West State Boise, Idaho

ORIGINAL SIGNED BY: TED E. MASON
DATE ORIGINAL SIGNED: OCTOBER 5, 2011

REVISIONS								
NO.	DATE	BY	NO.	DATE	BY	NO.	DATE	BY
1	9-93	MSM	6	7-03	MSM	11	7-10	JAW
2	12-95	MSM	7	12-04	MSM	12	9-11	TEM
3	6-98	MSM	8	6-05	MSM			
4	8-01	MSM	9	5-06	MSM			
5	10-02	MSM	10	5-07	MSM			

SCALES SHOWN ARE FOR 11" X 17" PRINTS ONLY

CADD FILE NAME: h2a_1011.dgn

DRAWING DATE: JUNE, 1990

IDAHO TRANSPORTATION DEPARTMENT

BOISE IDAHO

ORIGINAL SIGNED BY: LOREN THOMAS
HIGHWAYS PROGRAM OVERSIGHT ENGINEER

ORIGINAL SIGNED BY: TOM COLE
CHIEF ENGINEER

STANDARD DRAWING

SIDEWALKS & A.D.A. FACILITIES: NEW CONSTRUCTION

REQUIRES SHEET 1 OF 4, 2 OF 4, 3 OF 4 & STD. DWG. H-3

English

STANDARD DRAWING NO.

H-2-A

SHEET 4 OF 4

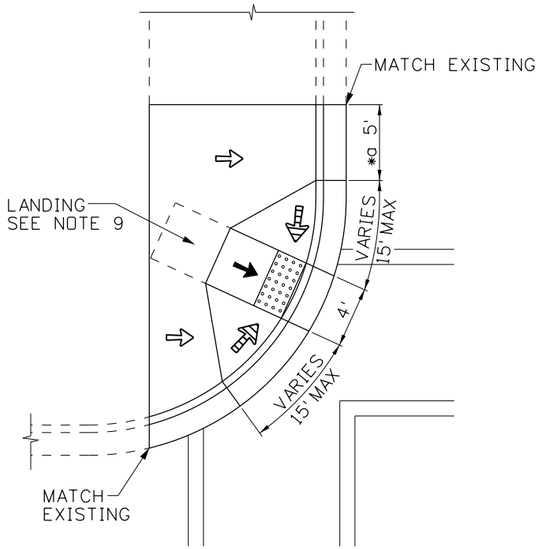

SEE NOTE 13

TYPE R-A1

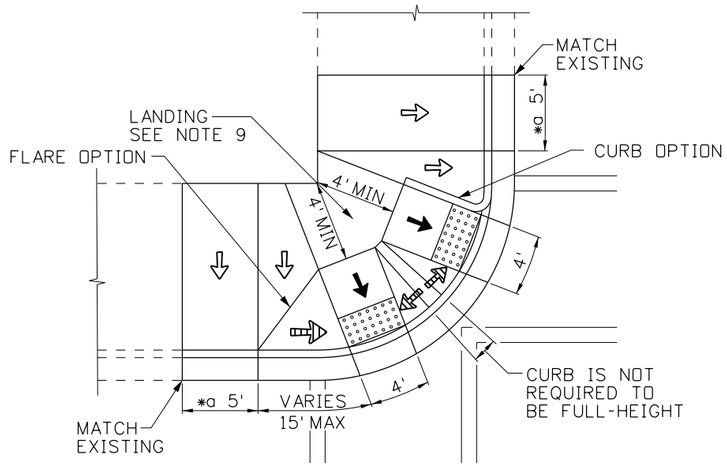

TYPE R-A2

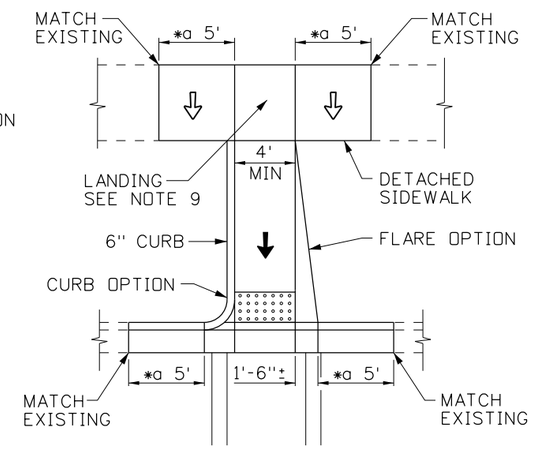

TYPE R-A3

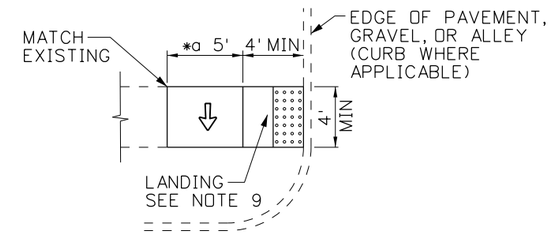

TYPE R-A4

SUB-NOTES
* a SEE NOTE 8
* b 6' MIN, BUT NOT LESS THAN THE RADIUS OR THE WIDTH OF THE SIDEWALK, WHICHEVER IS GREATER

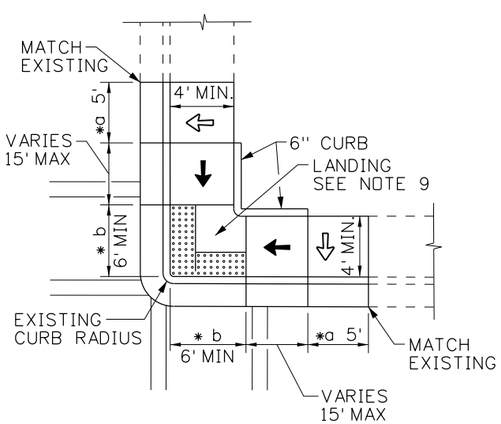

TYPE R-B1

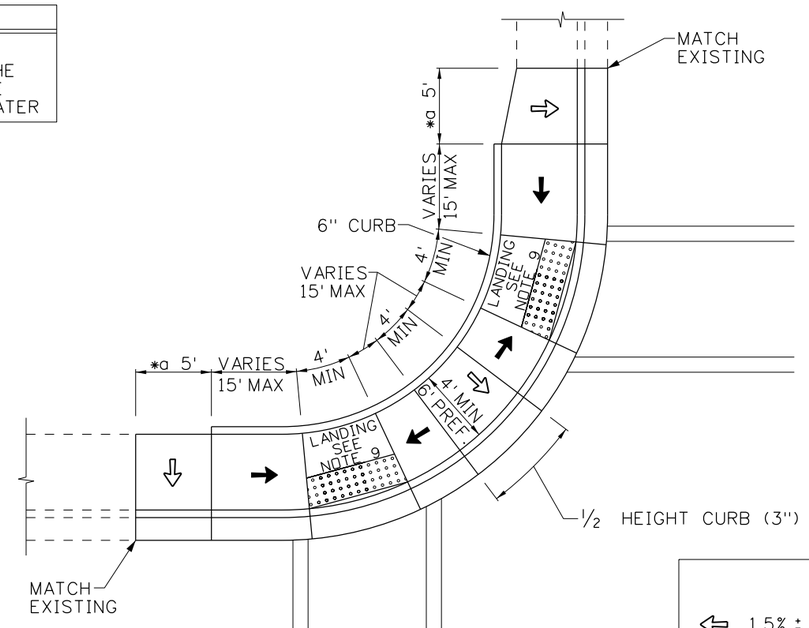

TYPE R-B2

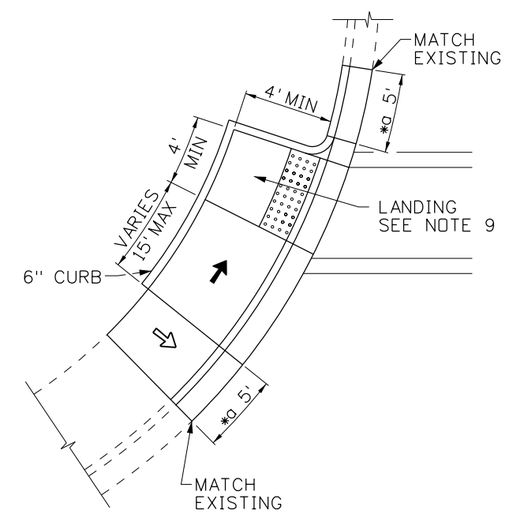

TYPE R-B3

LEGEND	
⇦	1.5% ± 0.5% (2% MAX) SLOPE
←	7.3% ± 1.0% (8.3% MAX) SLOPE (SEE NOTE 16)
⇦	9.0% ± 1.0% (10.0% MAX) SLOPE

ORIGINAL STORED AT: ITD, Headquarters 3311 West State Boise, Idaho

ORIGINAL SIGNED BY: TED E. MASON
DATE ORIGINAL SIGNED: NOVEMBER 23, 2011

REVISIONS								
NO.	DATE	BY	NO.	DATE	BY	NO.	DATE	BY
1	09-11	TEM						

SCALES SHOWN ARE FOR 11" X 17" PRINTS ONLY

CADD FILE NAME: h2b_1111.dgn

DRAWING DATE: JULY, 2010

IDAHO TRANSPORTATION DEPARTMENT

BOISE IDAHO

ORIGINAL SIGNED BY: LOREN THOMAS
HIGHWAYS PROGRAM OVERSIGHT ENGINEER
ORIGINAL SIGNED BY: TOM COLE
CHIEF ENGINEER

STANDARD DRAWING

SIDEWALKS & A.D.A. FACILITIES: RETROFIT APPLICATIONS

REQUIRES SHEET 2 OF 4, 3 OF 4, & 4 OF 4

English

STANDARD DRAWING NO.

H-2-B

SHEET 1 OF 4

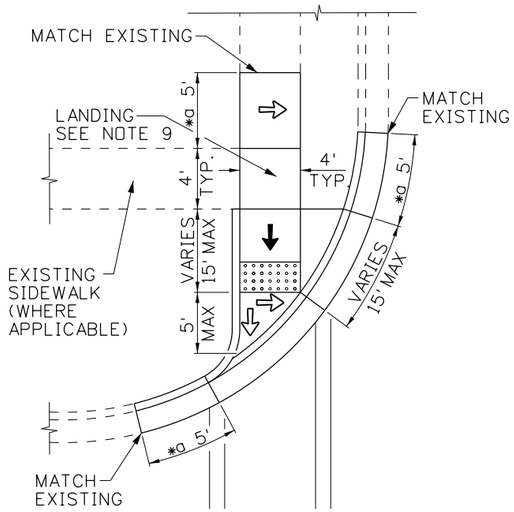

TYPE R-C1

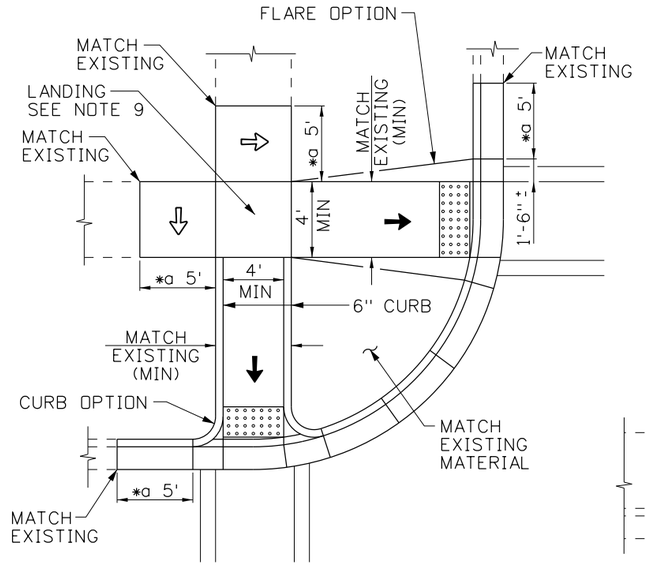

TYPE R-C2

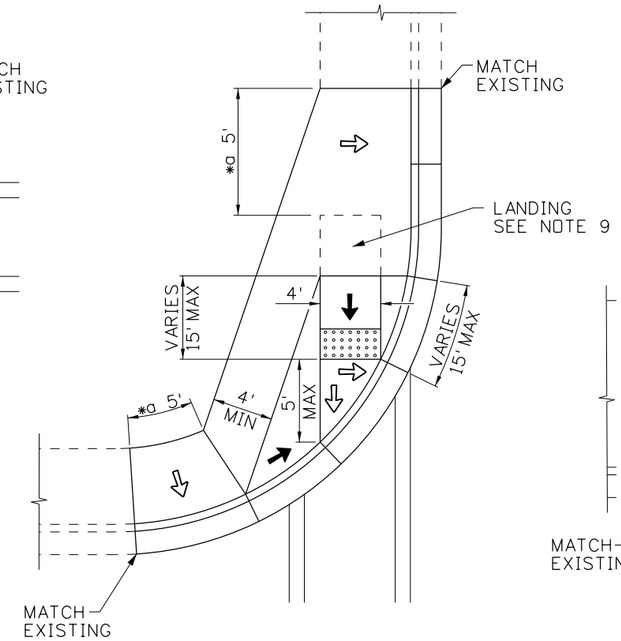

TYPE R-C3

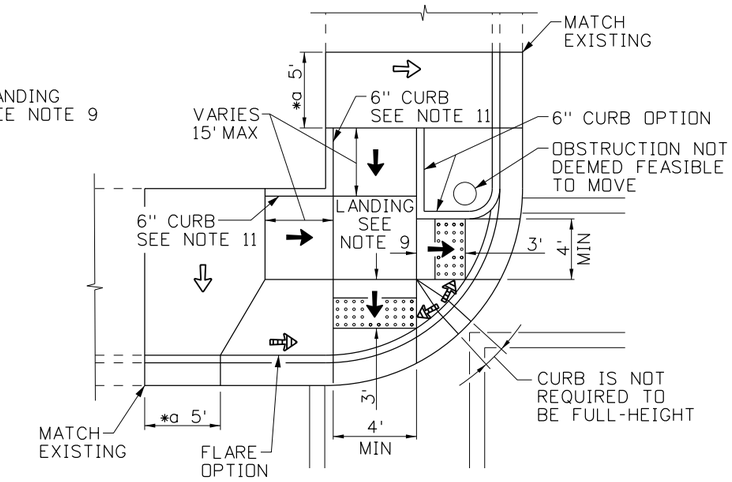

TYPE R-D1

SUB-NOTES
* a SEE NOTE 8
* b 6' MIN, BUT NOT LESS THAN THE RADIUS OR THE WIDTH OF THE SIDEWALK, WHICHEVER IS GREATER

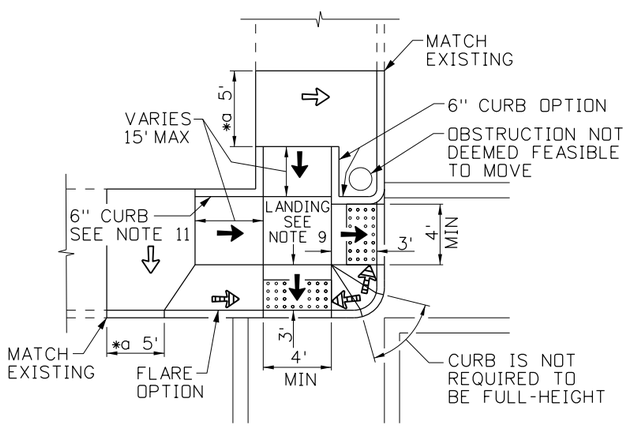

TYPE R-D2

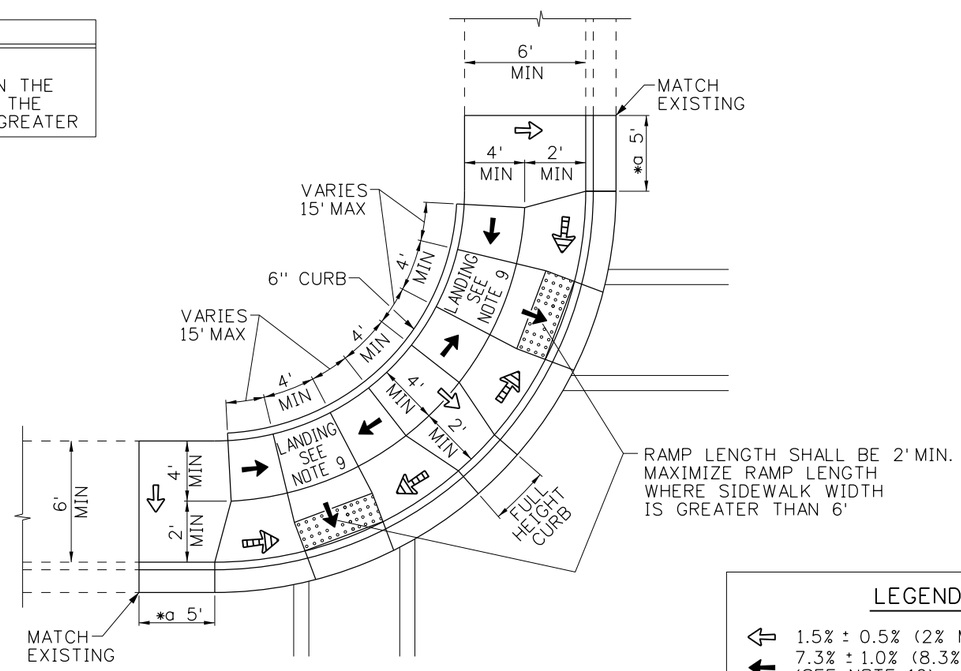

TYPE R-D3

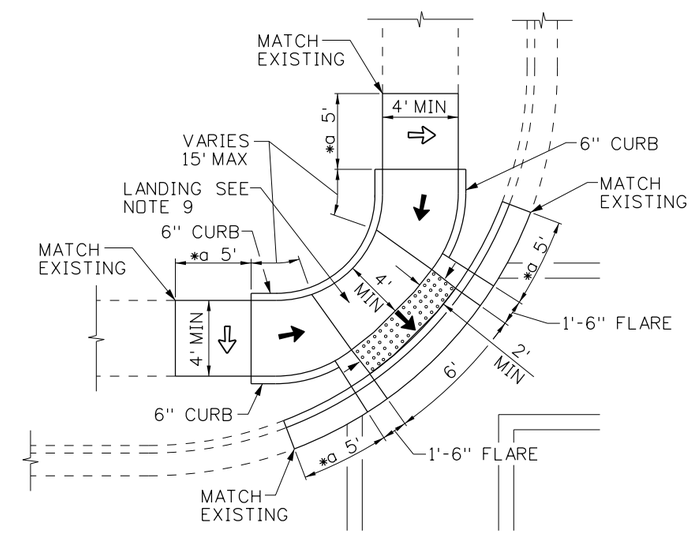

SEE NOTE 13

TYPE R-D4

LEGEND

- 1.5% ± 0.5% (2% MAX) SLOPE
- 7.3% ± 1.0% (8.3% MAX) SLOPE (SEE NOTE 16)
- 9.0% ± 1.0% (10.0% MAX) SLOPE

ORIGINAL STORED AT: ITD, Headquarters 3311 West State Boise, Idaho

ORIGINAL SIGNED BY: TED E. MASON
DATE ORIGINAL SIGNED: NOVEMBER 23, 2011

REVISIONS								
NO.	DATE	BY	NO.	DATE	BY	NO.	DATE	BY
1	09-11	TEM						

SCALES SHOWN ARE FOR 11" X 17" PRINTS ONLY

CADD FILE NAME: h2b_1111.dgn

DRAWING DATE: JULY, 2010

IDAHO TRANSPORTATION DEPARTMENT

BOISE IDAHO

ORIGINAL SIGNED BY: LOREN THOMAS
HIGHWAYS PROGRAM OVERSIGHT ENGINEER
ORIGINAL SIGNED BY: TOM COLE
CHIEF ENGINEER

STANDARD DRAWING

SIDEWALKS & A.D.A. FACILITIES: RETROFIT APPLICATIONS

REQUIRES SHEET 1 OF 4, 3 OF 4, & 4 OF 4

English

STANDARD DRAWING NO.

H-2-B

SHEET 2 OF 4

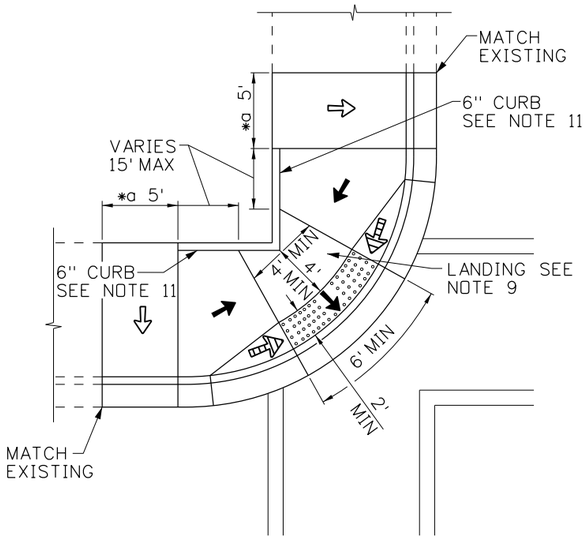

SEE NOTE 13

TYPE R-D5

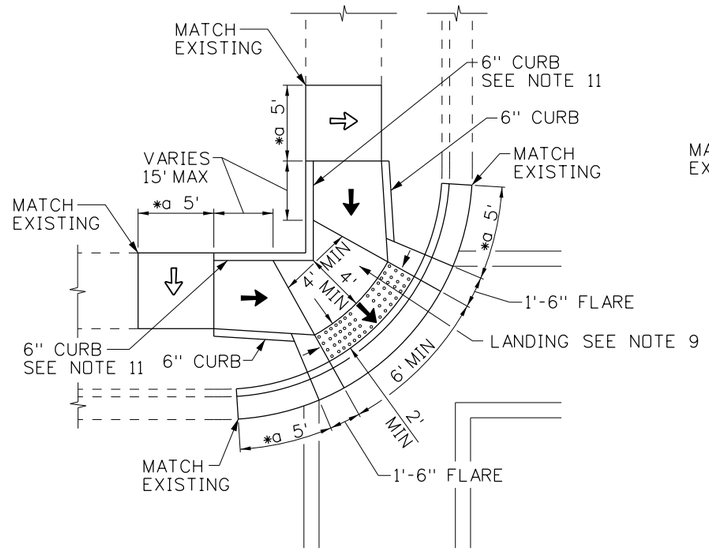

SEE NOTE 13

TYPE R-D6

SUB-NOTES
* a SEE NOTE 8
* b 6' MIN, BUT NOT LESS THAN THE RADIUS OR THE WIDTH OF THE SIDEWALK, WHICHEVER IS GREATER

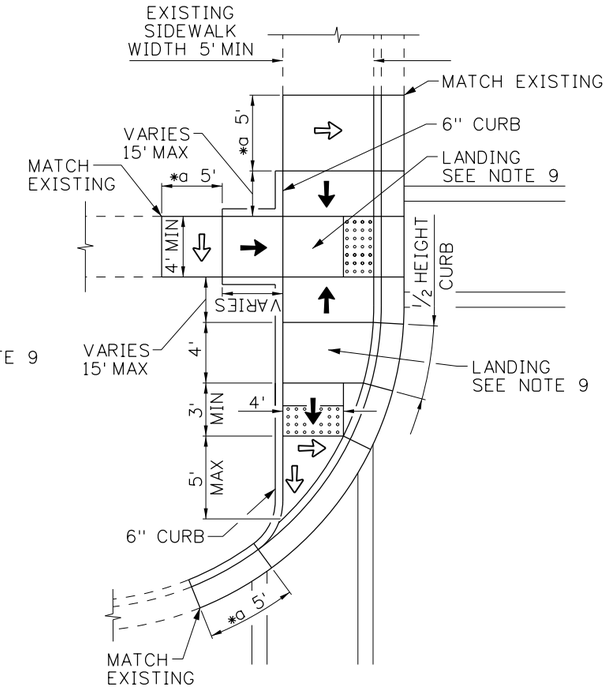

TYPE R-D7

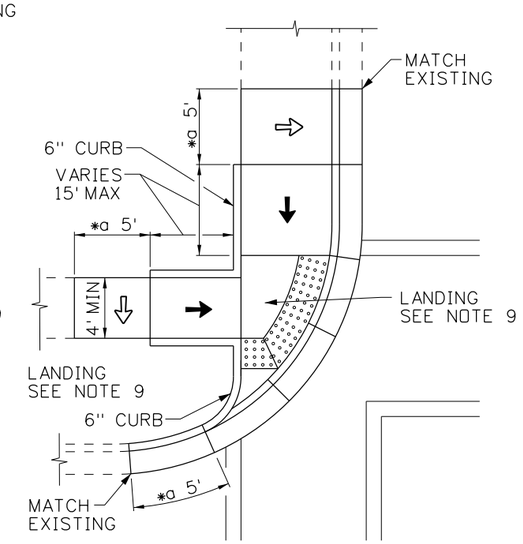

SEE NOTE 13

TYPE R-D8

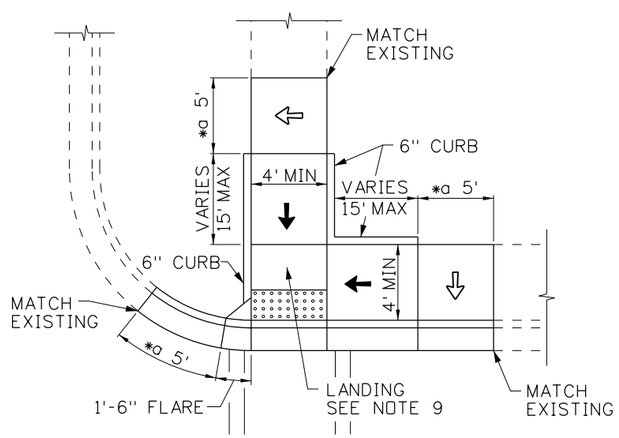

TYPE R-D9

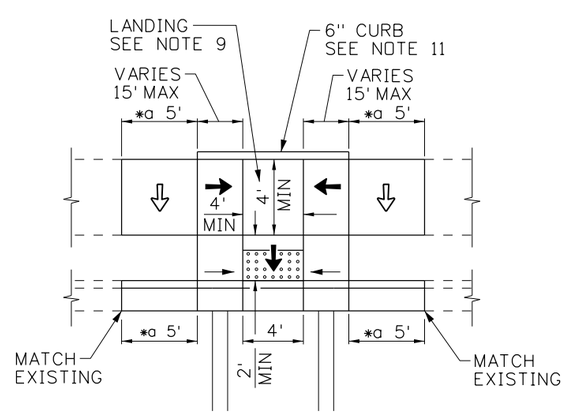

TYPE R-D10

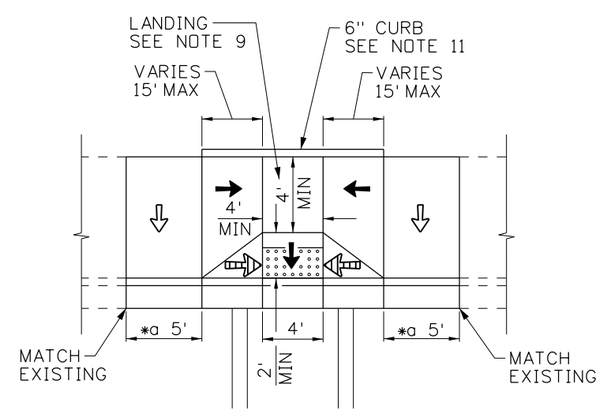

TYPE R-D11

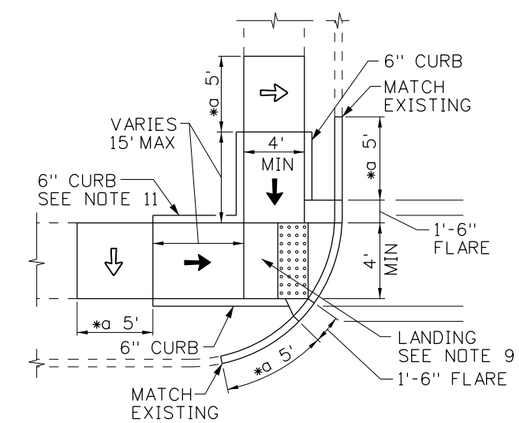

TYPE R-D12

LEGEND	
⇦	1.5% ± 0.5% (2% MAX) SLOPE
←	7.3% ± 1.0% (8.3% MAX) SLOPE (SEE NOTE 16)
⇦	9.0% ± 1.0% (10.0% MAX) SLOPE

ORIGINAL STORED AT: ITD, Headquarters 3311 West State Boise, Idaho

ORIGINAL SIGNED BY: TED E. MASON
DATE ORIGINAL SIGNED: NOVEMBER 23, 2011

REVISIONS								
NO.	DATE	BY	NO.	DATE	BY	NO.	DATE	BY
1	09-11	TEM						

SCALES SHOWN ARE FOR 11" X 17" PRINTS ONLY

CADD FILE NAME: h2b_1111.dgn

DRAWING DATE: JULY, 2010

IDAHO TRANSPORTATION DEPARTMENT

BOISE IDAHO

ORIGINAL SIGNED BY: LOREN THOMAS
HIGHWAYS PROGRAM OVERSIGHT ENGINEER

ORIGINAL SIGNED BY: TOM COLE
CHIEF ENGINEER

STANDARD DRAWING

SIDEWALKS & A.D.A. FACILITIES: RETROFIT APPLICATIONS

REQUIRES SHEET 1 OF 4, 2 OF 4, & 4 OF 4

English

STANDARD DRAWING NO.

H-2-B

SHEET 3 OF 4

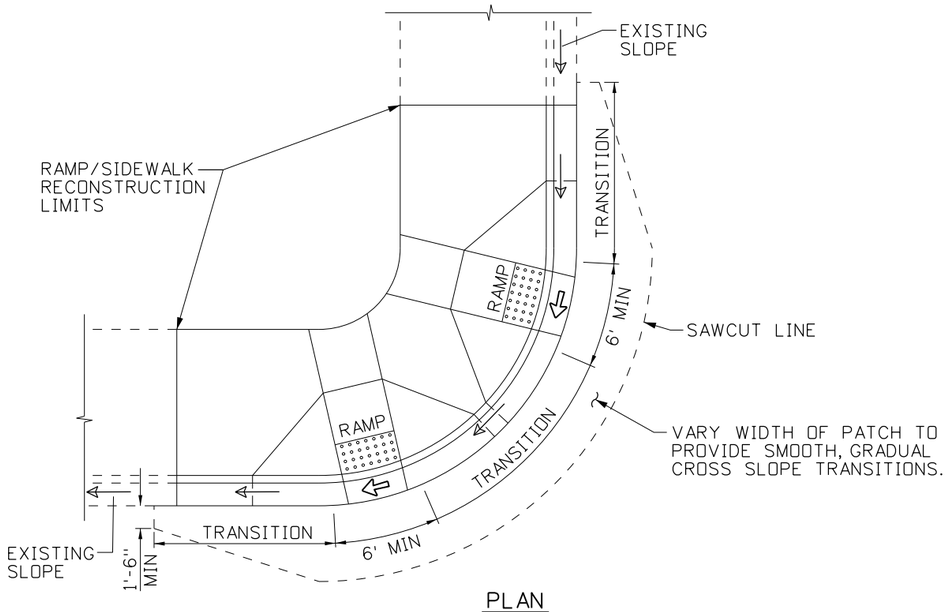

PLAN

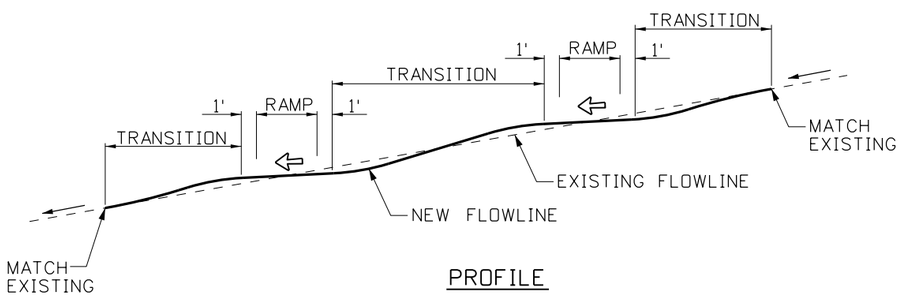

PROFILE

CURB OR CURB/GUTTER PROFILE DETAIL

SUB-NOTES
* a SEE NOTE 8
* b 6' MIN, BUT NOT LESS THAN THE RADIUS OR THE WIDTH OF THE SIDEWALK, WHICHEVER IS GREATER

LEGEND

⇦ 1.5% ± 0.5% (2% MAX) SLOPE

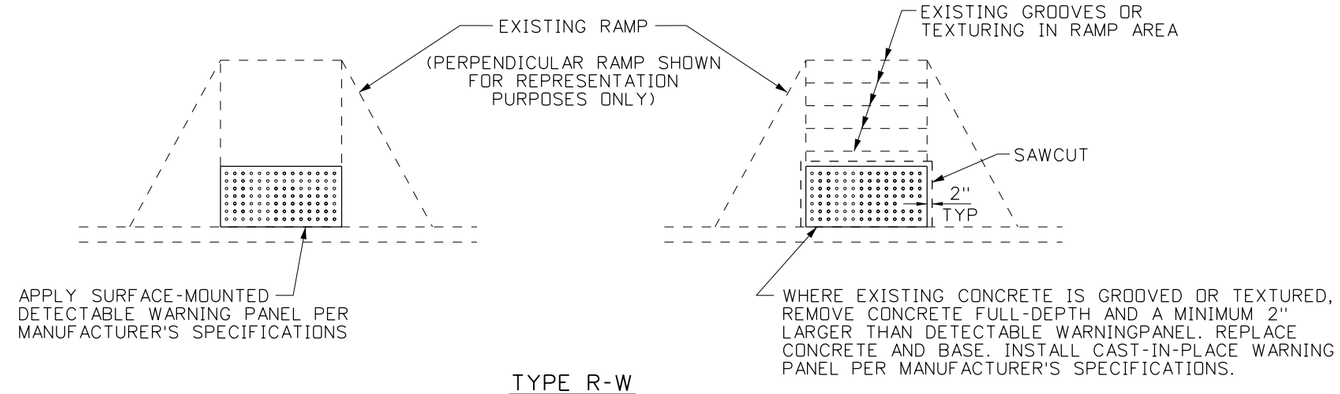

TYPE R-W

DETECTABLE WARNING SURFACE (TRUNCATED DOMES)

GENERAL NOTES

1. THE RAMPS DEPICTED IN THESE DETAILS ARE IDEAL AND ASSUME OPTIMAL ROADWAY GEOMETRIC DESIGN. A CURB HEIGHT OF 6" IS ASSUMED. ADJUSTMENTS MAY BE MADE FOR CONDITIONS IN THE FIELD SUCH AS ROADWAY GRADE, ACTUAL CURB HEIGHT, ETC.
2. THE DETECTABLE WARNING SURFACE SHALL BE INSTALLED 24" DEEP ALONG THE FULL WIDTH OF THE PEDESTRIAN RAMP. AT LEAST ONE CORNER OF THE LEADING EDGE OF THE TRUNCATED DOME PANEL SHALL BE NO MORE THAN 8" FROM THE NORMAL FACE OF CURB. THE DETECTABLE WARNING SURFACE SHALL BE SELECTED FROM THE IDAHO TRANSPORTATION DEPARTMENT'S QUALIFIED PRODUCTS LIST AND INSTALLED BY A MANUFACTURER'S TRAINED CRAFTSMAN. STAMPED CONCRETE DOMES ARE NOT ALLOWED. REFER TO STD. DWG. H-2-A FOR DETECTABLE WARNING SURFACE DETAILS.
3. RAMPS SHALL NOT HAVE ANY UTILITIES OR STRUCTURES WITHIN THE FLARE(S), RAMP(S), OR LANDING(S).
4. FINISH CONCRETE WITH A COARSE BROOM SURFACE PERPENDICULAR TO THE SLOPE IN RAMP, LANDING, AND FLARE AREAS.
5. PLACE PREFORMED EXPANSION JOINT FILLER IN SIDEWALK AREAS ONLY. JOINT FILLER SHALL NOT BE PLACED WITHIN 2' OF THE RAMP, FLARE, OR LANDING. REFER TO STD. DWG. H-1-B FOR DETAILS ON SIDEWALK CONSTRUCTION ADJACENT TO THE CURB RAMP.
6. CROSSWALK MARKINGS ARE SHOWN FOR REPRESENTATION PURPOSES ONLY. CORNER CURB RADII, PEDESTRIAN TRAFFIC, AND VEHICLE TRAFFIC NEEDS MUST BE ADDRESSED WHEN INSTALLING CROSSWALKS FOR CURB RAMPS AT INTERSECTIONS.
7. MATCH EXISTING CURB RADIUS FOR NEW CURB INSTALLATION, UNLESS OTHERWISE NOTED.
8. RECONSTRUCT A MINIMUM LENGTH OF 5' OF SIDEWALK AND CURB/GUTTER BEYOND RAMP, LANDING, AND/OR FLARE TO TRANSITION SLOPE AND/OR WIDTH OF SIDEWALK. THE MAXIMUM LENGTH SHALL BE 15' OR AS DIRECTED. MATCH EXISTING SIDEWALK WIDTHS OF 4' OR GREATER, UNLESS OTHERWISE NOTED. TRANSITION TO A MINIMUM OF 4' WIDTH WHERE EXISTING SIDEWALK WIDTHS ARE LESS THAN 4'.
9. LANDINGS SHALL HAVE ABSOLUTE MINIMUM DIMENSIONS OF 4' x 4' AND ABSOLUTE MAXIMUM SLOPES OF 2% IN ALL DIRECTIONS.
10. REFER TO STD. DWG. H-2-A FOR MATERIAL THICKNESSES AND CROSS SECTIONS.
11. WHERE 6" CURB IS PLACED AGAINST A BUILDING OR RETAINING WALL, THE TOP OF CURB SHALL MATCH THE ORIGINAL SIDEWALK ELEVATION.
12. GRADE BREAKS SHALL BE ANGULAR AND DISTINCT.
13. TYPICALLY, TWO CURB RAMPS MUST BE PROVIDED AT EACH STREET CORNER. IN ALTERATIONS WHERE EXISTING PHYSICAL CONSTRAINTS PREVENT TWO CURB RAMPS FROM BEING INSTALLED AT A STREET CORNER, A SINGLE DIAGONAL CURB RAMP IS PERMITTED AT THE CORNER.
14. REFER TO THE "MANUAL ON UNIFORM TRAFFIC CONTROL DEVICES" (MUTCD) FOR PLACEMENT OF APPROACH CROSSWALK MARKINGS AND VEHICLE STOP BARS.
15. FLARES ARE GENERALLY PREFERRED OVER RETURN CURBS TO PROVIDE GRADUAL CURB TRANSITIONS. RETURN CURBS ON RAMPS SHALL ONLY BE INSTALLED IN LOCATIONS THAT ARE NOT PART OF THE PEDESTRIAN CIRCULATION PATH. FLARES THAT ARE NOT PART OF THE PEDESTRIAN CIRCULATION PATH MAY BE ANY SLOPE (33% PREFERRED MAX).
16. LIMIT CROSS SLOPE ON RAMPS TO MAXIMUM OF 2%.
17. NOT TO SCALE.

ORIGINAL STORED AT: ITD, Headquarters 3311 West State Boise, Idaho

ORIGINAL SIGNED BY: TED E. MASON
DATE ORIGINAL SIGNED: NOVEMBER 23, 2011

REVISIONS								
NO.	DATE	BY	NO.	DATE	BY	NO.	DATE	BY
1	09-11	TEM						

SCALES SHOWN ARE FOR 11" X 17" PRINTS ONLY

CADD FILE NAME: h2b_1111.dgn

DRAWING DATE: JULY, 2010

IDAHO TRANSPORTATION DEPARTMENT

BOISE IDAHO

ORIGINAL SIGNED BY: LOREN THOMAS
HIGHWAYS PROGRAM OVERSIGHT ENGINEER

ORIGINAL SIGNED BY: TOM COLE
CHIEF ENGINEER

STANDARD DRAWING

SIDEWALKS & A.D.A. FACILITIES: RETROFIT APPLICATIONS

REQUIRES SHEET 1 OF 4, 2 OF 4, & 3 OF 4

English

STANDARD DRAWING NO.

H-2-B

SHEET 4 OF 4

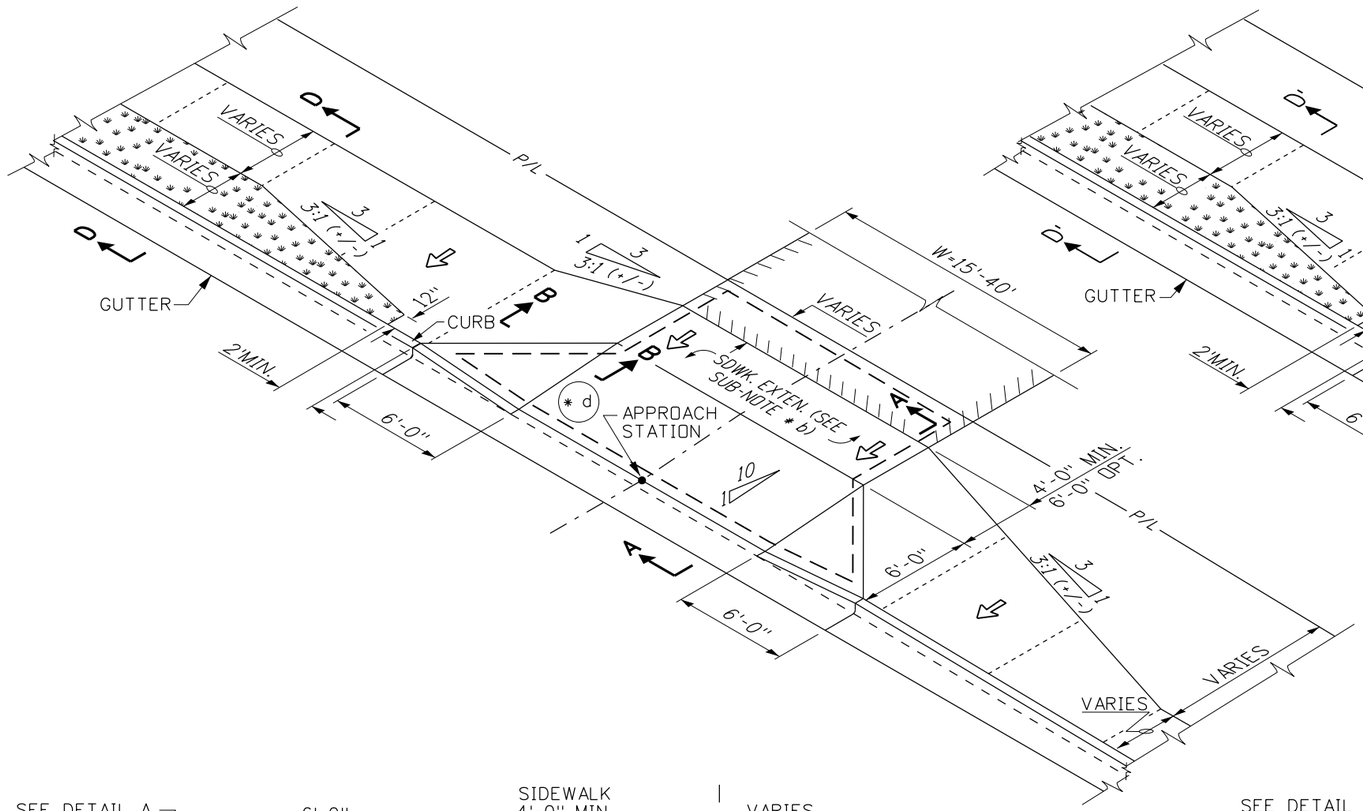

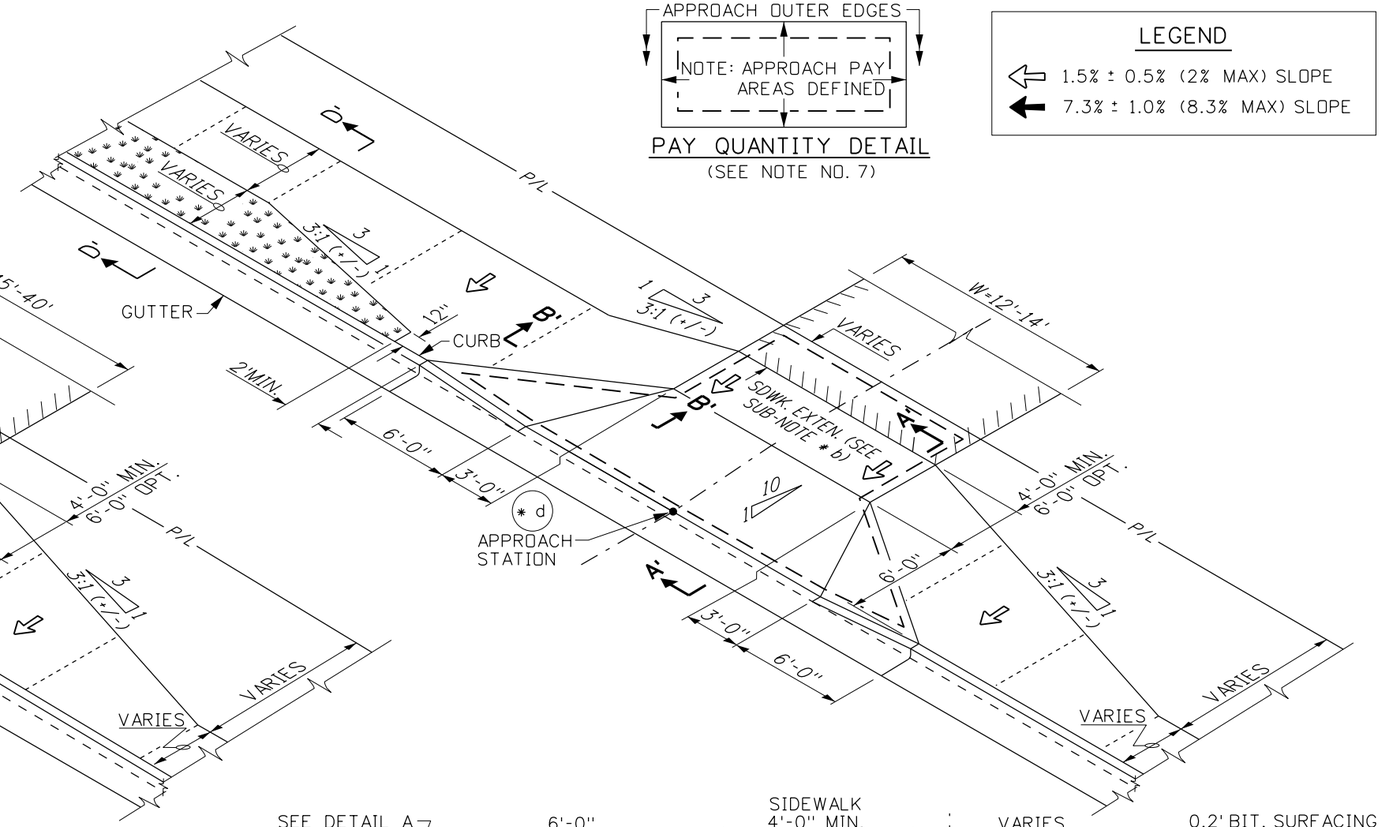

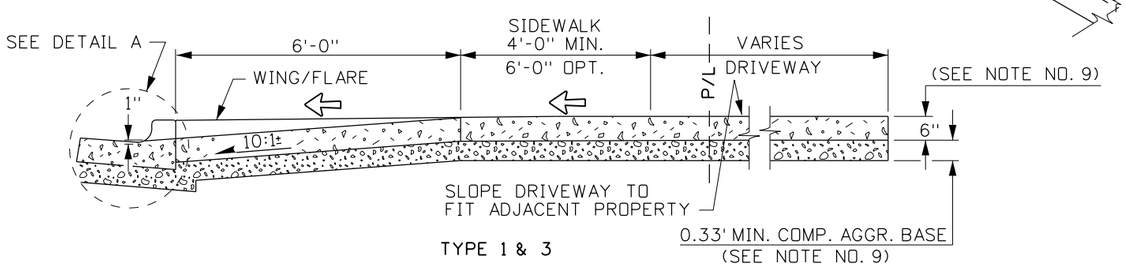

TYPE 1 & 3

SECTION A-A

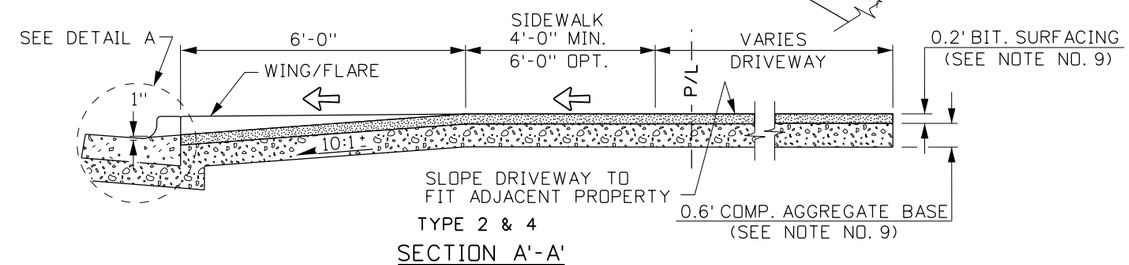

TYPE 2 & 4

SECTION A'-A'

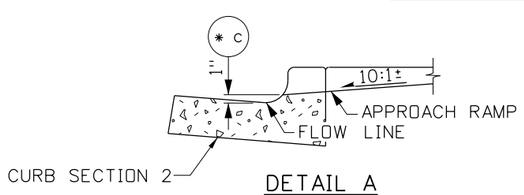

DETAIL A

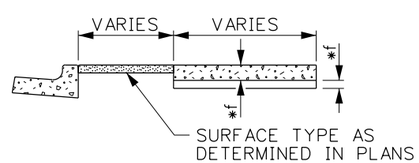

SIDEWALK

SECTION D-D & D'-D'

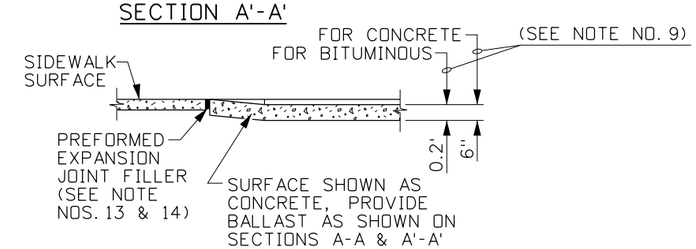

SECTION B-B & B'-B'

(APPROACH FLARE)

TYPE 1 (CONCRETE) OR 2 (BITUMINOUS)

STANDARD URBAN APPROACH

TYPE 3 (CONCRETE) OR 4 (BITUMINOUS)

FLARED URBAN APPROACH

ORIGINAL STORED AT: ITD, Headquarters 3311 West State Boise, Idaho

ORIGINAL SIGNED BY: TED E. MASON
DATE ORIGINAL SIGNED: SEPTEMBER 22, 2010

REVISIONS

NO.	DATE	BY	NO.	DATE	BY	NO.	DATE	BY
1	11-90	GB	6	5-06	MSM			
2	9-93	MSM	7	5-07	MSM			
3	12-94	MSM	8	7-10	JAW			
4	9-02	MSM						
5	6-04	MSM						

SCALES SHOWN ARE FOR 11" X 17" PRINTS ONLY

CADD FILE NAME: h3_0910.dgn

DRAWING DATE: APRIL, 1990

IDAHO TRANSPORTATION DEPARTMENT

BOISE IDAHO

ORIGINAL SIGNED BY: LOREN THOMAS
ASSISTANT CHIEF ENGINEER (DEVELOPMENT)
ORIGINAL SIGNED BY: TOM COLE
CHIEF ENGINEER

STANDARD DRAWING

URBAN APPROACHES & CONCRETE SIDEWALK

REQUIRES SHEETS 2 OF 3, 3 OF 3 & STD. DWG. H-1-A & H-1-B

English

STANDARD DRAWING NO.

H-3

SHEET 1 OF 3

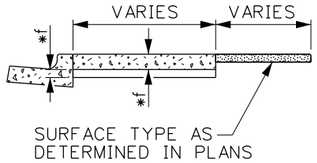

SECTION G-G

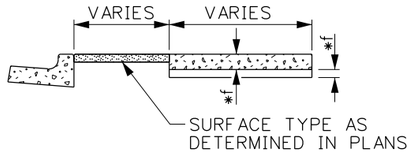

SECTION G'-G'

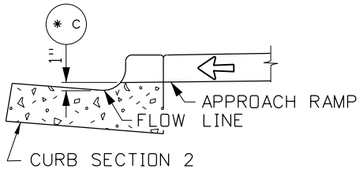

DETAIL C

LEGEND

⇦ 1.5% ± 0.5% (2% MAX) SLOPE

⬅ 7.3% ± 1.0% (8.3% MAX) SLOPE

SUB-NOTES

* a THE APPROACH SKEW ANGLE IS TO FALL WITHIN THE ALLOWABLE OR DESIRABLE LIMITS. THE DESIRABLE LIMIT IS CONSIDERED THE SAFEST OPTIMUM.
* b (SEE NOTE NOS. 6, 7, & 8)
* c RAMP ENTRANCE 1" ABOVE GUTTER FLOW LINE.
* d SEE "SKEW ANGLE DETAIL" & NOTE NO. 2.
* e (SEE NOTE NO. 5)
* f SEE STD. DWG. H-1-B FOR SIDEWALK MATERIAL THICKNESSES.

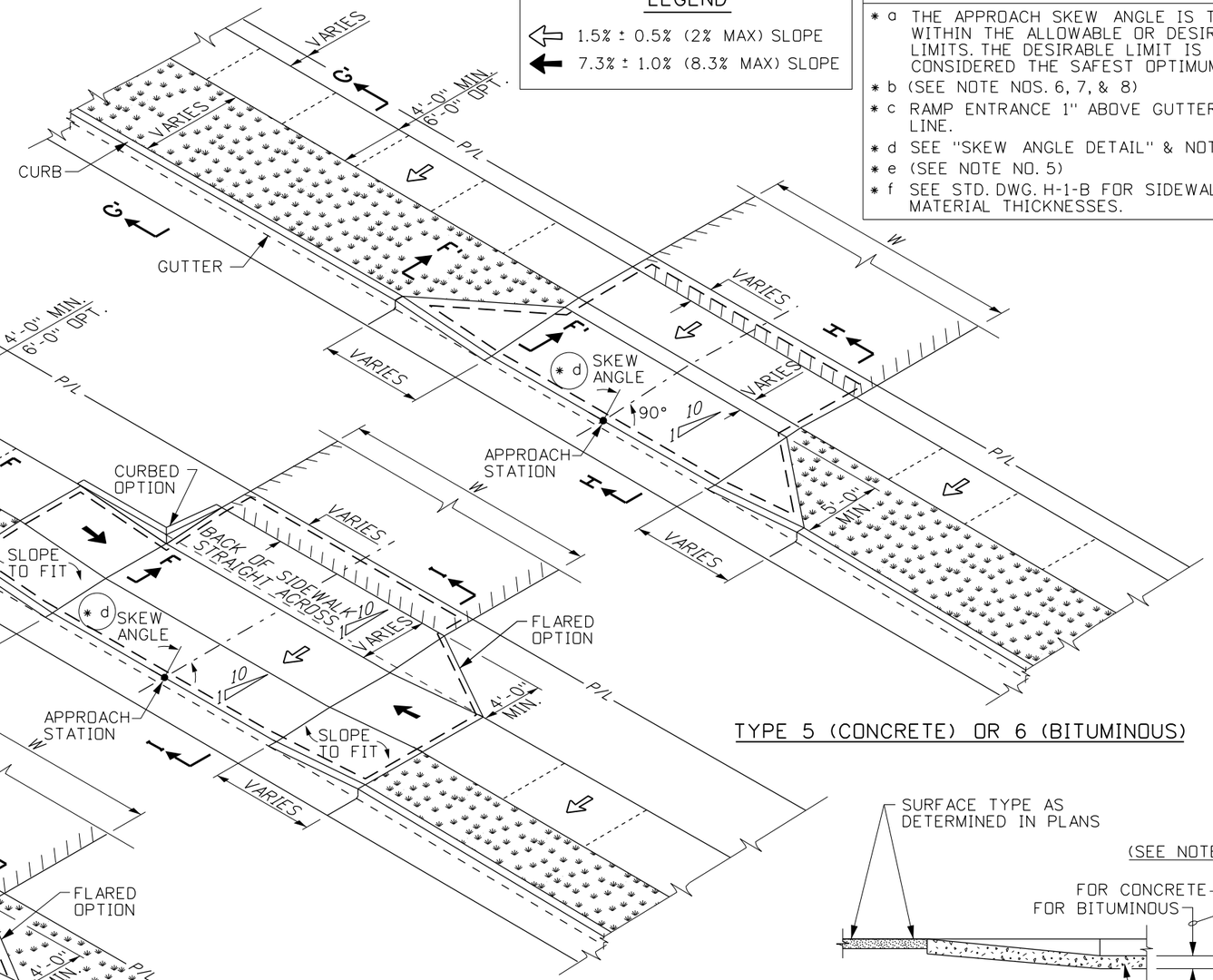

TYPE 5 (CONCRETE) OR 6 (BITUMINOUS)

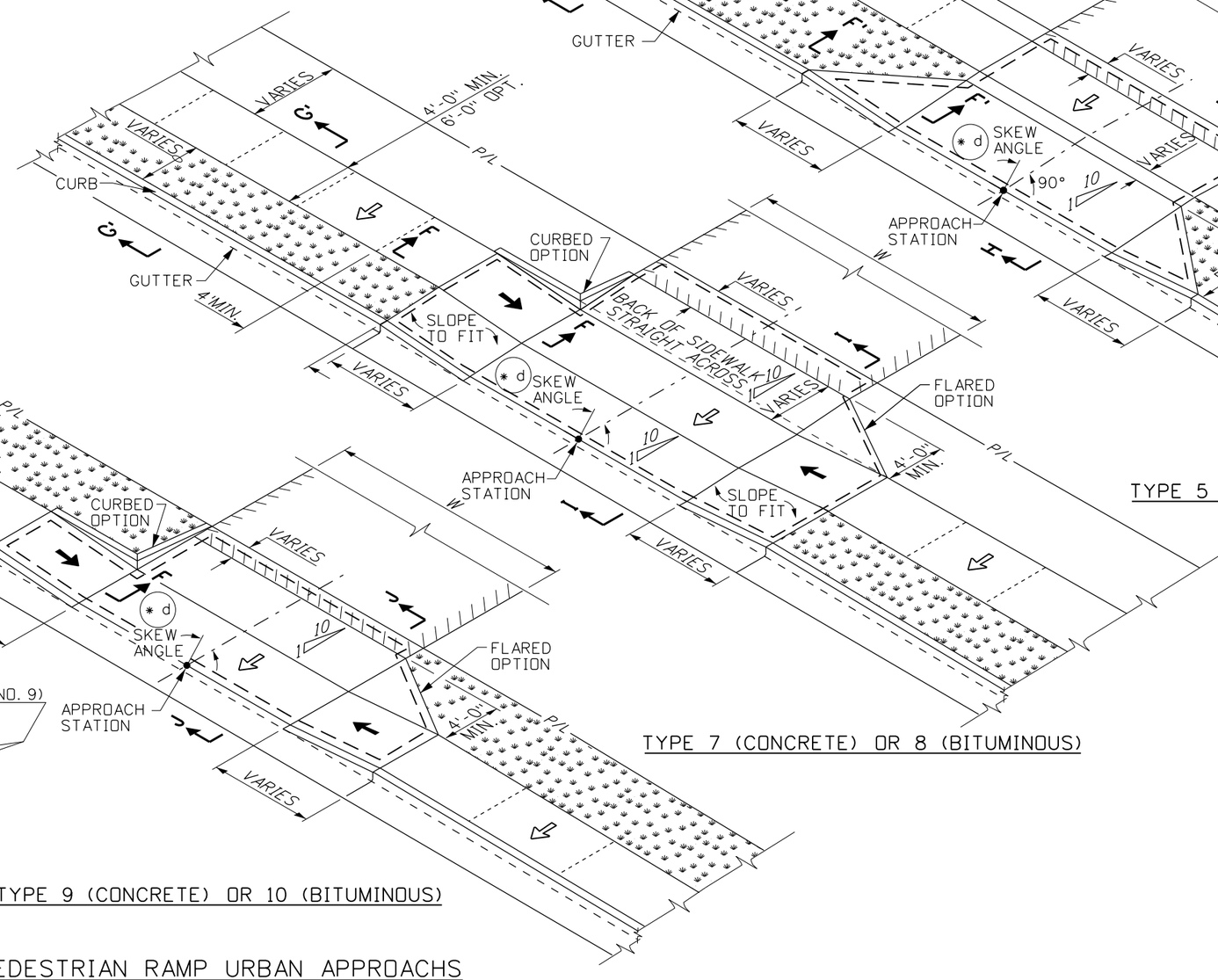

TYPE 7 (CONCRETE) OR 8 (BITUMINOUS)

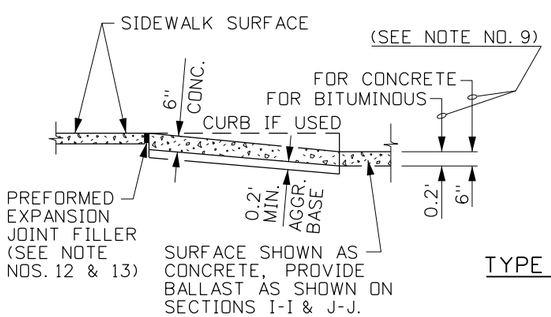

SECTION F-F

TYPE 9 (CONCRETE) OR 10 (BITUMINOUS)

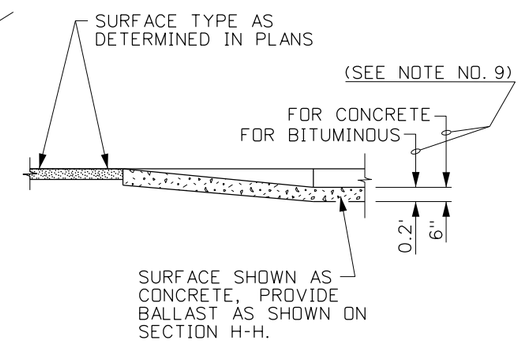

SECTION F'-F'

PEDESTRIAN RAMP URBAN APPROACHS

ORIGINAL STORED AT: ITD, Headquarters 3311 West State Boise, Idaho

ORIGINAL SIGNED BY: TED E. MASON DATE ORIGINAL SIGNED: SEPTEMBER 22, 2010

REVISIONS								
NO.	DATE	BY	NO.	DATE	BY	NO.	DATE	BY
1	11-90	GB	6	5-06	MSM			
2	9-93	MSM	7	5-07	MSM			
3	12-94	MSM	8	7-10	JAW			
4	9-02	MSM						
5	6-04	MSM						

SCALES SHOWN ARE FOR 11" X 17" PRINTS ONLY

CADD FILE NAME: h3_0910.dgn

DRAWING DATE: APRIL, 1990

IDAHO TRANSPORTATION DEPARTMENT

BOISE IDAHO

ORIGINAL SIGNED BY: LOREN THOMAS
ASSISTANT CHIEF ENGINEER (DEVELOPMENT)
ORIGINAL SIGNED BY: TOM COLE
CHIEF ENGINEER

STANDARD DRAWING

URBAN APPROACHES & CONCRETE SIDEWALK

REQUIRES SHEETS 1 OF 3, 3 OF 3 & STD. DWG. H-1-A & H-1-B

English

STANDARD DRAWING NO. H-3

SHEET 2 OF 3

LEGEND

- 1.5% ± 0.5% (2% MAX) SLOPE
- 7.3% ± 1.0% (8.3% MAX) SLOPE

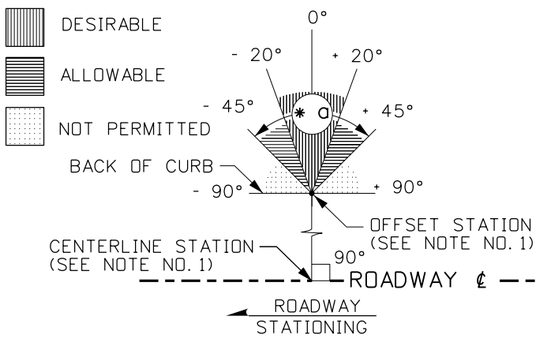

SKEW ANGLE DETAIL

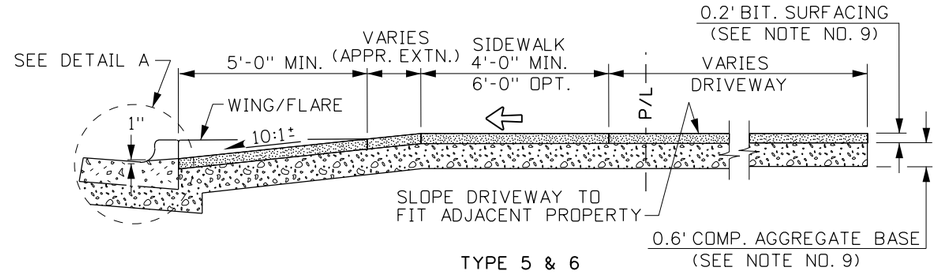

TYPE 5 & 6

SECTION H-H

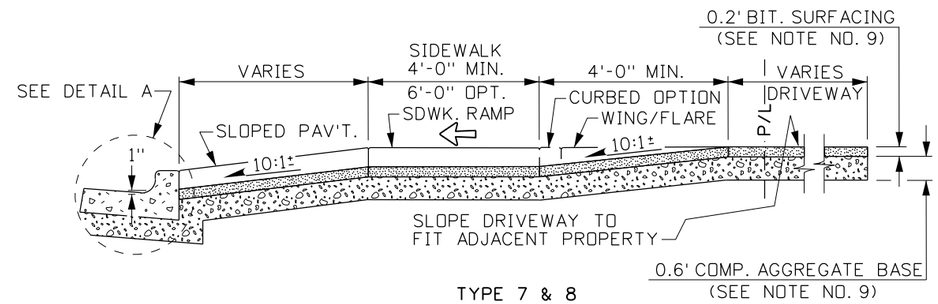

TYPE 7 & 8

SECTION I-I

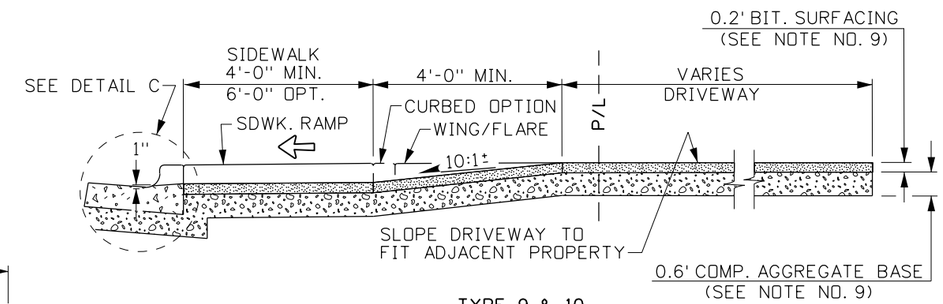

TYPE 9 & 10

SECTION J-J

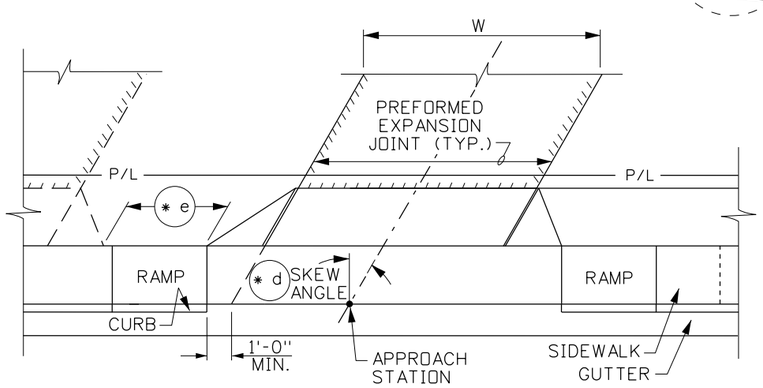

TYPICAL SKEWED URBAN APPROACH

NOTES

1. APPROACHES BEGIN AT A POINT (OFFSET STATION) WHICH IS OFFSET TO THE BACK OF CURB PERPENDICULAR FROM THE CENTERLINE STATION. THE SKEW ANGLE POINT-OF-ROTATION IS AT THE OFFSET STATION.
2. AN APPROACH DESCRIPTION, AS SHOWN ON THE PLANS, SHOULD INCLUDE A ROADWAY CENTERLINE STATION, THE OFFSET (LEFT OR RIGHT) DISTANCE TO THE BACK OF CURB, A SKEW ANGLE WITH "(+/-)" DEGREES (0° SKEW ANGLES ARE NOT NOTED), AND THE WIDTH, "W", OF THE APPROACH.
3. THE APPROACH FLARE LENGTH (THE LENGTH OF THE CURB AND GUTTER TRANSITION FROM FULL HEIGHT TO APPROACH HEIGHT) IS CONSTANT REGARDLESS OF THE SKEW ANGLE.
4. TYPE 3 AND 4 ARE FOR URBAN APPROACHES 14 FEET OR LESS IN WIDTH.
5. THE DISTANCE BETWEEN APPROACHES IS DICTATED BY POLICY. NORMALLY, THE MINIMUM DISTANCE BETWEEN APPROACHES IS 5'-0". REFER TO THE ITD "RIGHT-OF-WAY USE POLICY" AND "STATE HIGHWAY ACCESS CONTROL" POLICIES FOR CURRENT INFORMATION GOVERNING ACCESS CONTROL, APPROACH PLACEMENT, AND DIMENSIONING REGULATIONS.
6. A SIDEWALK EXTENSION SHALL BE CONSTRUCTED AT THE BACK OF THE APPROACH. BOTH SKEWED AND UNSKEWED APPROACHES SHALL BE CONSTRUCTED SO THAT THE WIDTH OF THE EXTENSION IS 4' MINIMUM AT THE NARROWEST POINT. WHEN INSUFFICIENT SPACE IS AVAILABLE TO CONSTRUCT THE NEEDED 4' SIDEWALK EXTENSION, CONSTRUCT THE PEDESTRIAN RAMP STYLE APPROACH (TYPES 7, 8, 9, OR 10) INSTEAD.
7. PAY QUANTITIES FOR URBAN APPROACHES SHALL INCLUDE THE APPROACH RAMP/DRIVEWAY AREA, THE APPROACH FLARES/WINGS, CURBS FOR THE CURBED OPTION, THE APPROACH PEDESTRIAN RAMPS TO SIDEWALKS, AND THE APPROACH EXTENSION WHEN NEEDED (PAY QUANTITIES INCLUDE ANY PART OF THE APPROACH THAT MEETS THE REQUIREMENTS OF NOTE NO. 9.). THE APPROACH EXTENSION LIMIT IS AT THE PROPERTY LINE. THE URBAN APPROACH PAY QUANTITY DOES NOT INCLUDE PAY FOR CURB AND/OR GUTTER IN FRONT OF THE APPROACH.
8. NORMALLY USE A MINIMUM 3:1 (+/-) OR AN AESTHETICALLY PLEASING TAPER IN FROM THE EDGE OF NEW OR EXISTING SIDEWALK TO THE BACK OF THE APPROACH 4' MINIMUM APPROACH EXTENSION.
9. ALL TYPE 1, 3, 5, 7, & 9 APPROACH RAMPS AND FLARES SHALL HAVE MINIMUM CONCRETE THICKNESS OF 6" AND MINIMUM COMPACTED AGGREGATE BASE OF 0.33'. ALL TYPE 2, 4, 6, 8, & 10 APPROACH RAMPS AND FLARES SHALL HAVE A MINIMUM ASPHALT THICKNESS OF 0.2 FEET AND A MINIMUM 0.6 FEET OF COMPACTED AGGREGATE BASE.
10. ALL PEDESTRIAN RAMPS SHALL HAVE A SLOPE OF 12:1 OR FLATTER. ALL URBAN APPROACH RAMPS/DRIVEWAYS SHALL HAVE A SLOPE OF 10:1 OR FLATTER. THE TRAVERSE SLOPE OF SIDEWALKS AND APPROACH EXTENSIONS CONSTRUCTED FOR A SIDEWALK SHALL NOT BE MORE THAN 2%.
11. TEXTURE THE CONCRETE APPROACH RAMPS WITH A PERPENDICULAR TO THE SLOPE COURSE BROOM SURFACE.
12. AN APPROVED BOND PREVENTIVE SHALL BE PROVIDED BETWEEN THE SIDEWALK AND CURB WHEN PLACED ADJACENT TO EACH OTHER. WHEN CONSTRUCTING NEW SIDEWALK ADJACENT TO EXISTING CURB OR SIDEWALK, THE NEW JOINTS SHALL FALL IN THE SAME SEQUENCE AS THE EXISTING.
13. A PREFORMED EXPANSION JOINT FILLER SHALL BE PLACED BETWEEN THE SIDEWALK AND THE URBAN APPROACH CONSTRUCTION. EXPANSION JOINT FILLER SHALL BE PLACED EVERY 40' FOR NEW SIDEWALK CONSTRUCTION.
14. SIDEWALK CONSTRUCTION JOINTS SHALL BE CONSTRUCTED AT 5' SPACING. APPROXIMATELY 1/8" WIDE, 3/4" IN DEPTH, AND FINISHED AND EDGED SMOOTH.
15. COMBINATION CURB AND GUTTER SECTION 2 IS SHOWN IN THE DRAWING DETAILS FOR OTHER CURB TYPES REFER TO STD. DWG. H-1-A (CURBS, GUTTERS, TRAFFIC SEPARATORS, AND RAISED CHANNELIZATION END TREATMENT).
16. NOT TO SCALE.

ORIGINAL STORED AT: ITD, Headquarters 3311 West State Boise, Idaho

ORIGINAL SIGNED BY: TED E. MASON DATE ORIGINAL SIGNED: SEPTEMBER 22, 2010

REVISIONS

NO.	DATE	BY	NO.	DATE	BY	NO.	DATE	BY
1	11-90	GB	6	5-06	MSM			
2	9-93	MSM	7	5-07	MSM			
3	12-94	MSM	8	7-10	JAW			
4	9-02	MSM						
5	6-04	MSM						

SCALES SHOWN ARE FOR 11" X 17" PRINTS ONLY

CADD FILE NAME: h3_0910.dgn

DRAWING DATE: APRIL, 1990

IDAHO TRANSPORTATION DEPARTMENT

BOISE IDAHO

ORIGINAL SIGNED BY: LOREN THOMAS
ASSISTANT CHIEF ENGINEER (DEVELOPMENT)
ORIGINAL SIGNED BY: TOM COLE
CHIEF ENGINEER

STANDARD DRAWING

URBAN APPROACHES & CONCRETE SIDEWALK

REQUIRES SHEETS 1 OF 3, 2 OF 3 & STD. DWG. H-1-A & H-1-B

English

STANDARD DRAWING NO. H-3

SHEET 3 OF 3

Appendix E
ISPWC Standard ADA Drawings

THIS PAGE INTENTIONALLY LEFT BLANK

NOTES:

(A) DETECTABLE WARNINGS SHALL BE 24" IN THE DIRECTION OF TRAVEL AND EXTEND THE FULL WIDTH OF THE CURB RAMP, LANDING OR BLEND TRANSITION.

(B) DETECTABLE WARNINGS SHALL HAVE A DIAMETER OF 50% TO 65% OF THE BASE DIAMETER OF DOME.

(C) DETECTABLE WARNING DOMES SHALL BE PRE-MANUFACTURED UNITS INTEGRALLY CAST INTO CONCRETE RAMP TO ACHIEVE THE TRUNCATED DOME DIMENSIONS AND SPACING SHOWN. INSTALLATION TO BE PER MANUFACTURER'S SPECIFICATIONS. SURFACES SHALL CONTRAST VISUALLY WITH ADJACENT WALKING SURFACES EITHER LIGHT-ON-DARK, OR DARK-ON-LIGHT. METHODS OF CONSTRUCTION AND COLORATION MUST BE APPROVED BY THE OWNER PRIOR TO INSTALLATION.

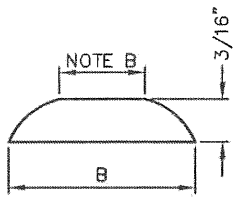

DOME SECTION

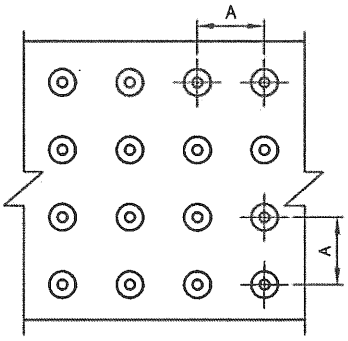

DOME SPACING

	MIN.	MAX.
A	1 5/8"	2 3/8"
B	7/8"	1 7/16"

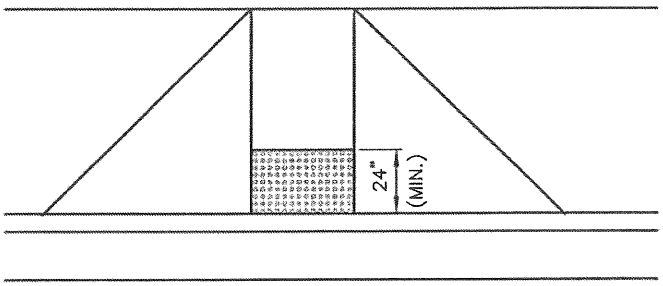

PERPENDICULAR RAMP

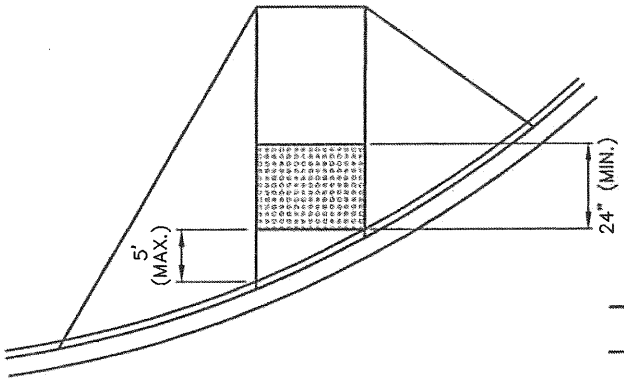

SKEWED RAMP

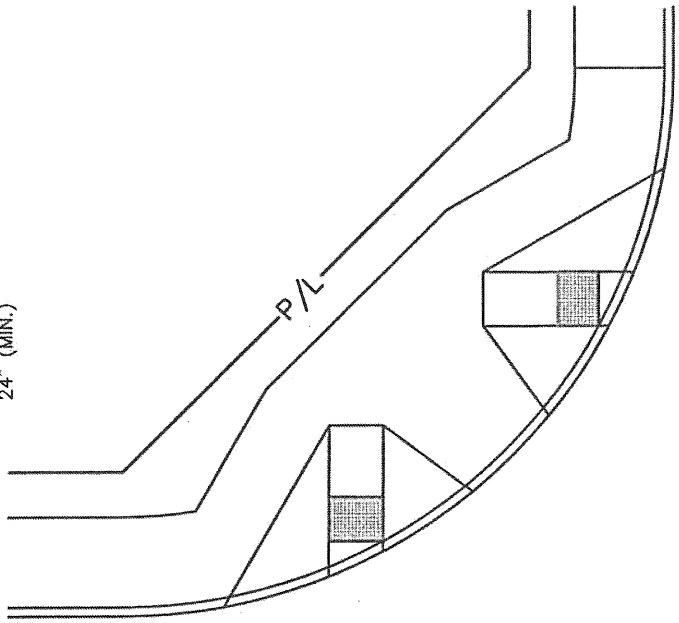

2015

IDAHO STANDARDS FOR PUBLIC WORKS CONSTRUCTION	DETECTABLE WARNING FOR PEDESTRIAN ACCESS	STANDARD DRAWING NO. SD-712

NOTES:

(A) THIS TYPE OF RAMP TO BE USED FOR ALL CORNERS EXCEPT WHERE LOCAL STREETS MEET.

(B) CURB ON THE RADIUS TO BE 6" STANDARD CURB FOR SHOWN DIMENSIONS.

(C) ALL RAMP SURFACES TO BE 12 TO 1 SLOPE TO CONFORM TO ADA REQUIREMENTS.

(D) THIS TYPE OF CORNER TO HAVE TWO RAMPS CENTERED IN RADIUS WITH 6' BETWEEN RAMP WING TIPS.

(E) CORNER RADIUS IS 30' AS A MINIMUM WHEN ADJOINING ANY COLLECTOR OR ARTERIAL STREET. THE ENGINEER MAY REQUIRE LARGER RADIUS SIZES WHERE LARGER VEHICLE TURNING IS EXPECTED.

(F) PROPERTY TRIANGLE SIZE TO BE EQUAL TO THE RADIUS SIZE AS A MINIMUM. THE ENGINEER MAY REQUIRE LARGER TRIANGLES TO ACCOMMODATE VARIOUS TRAFFIC EQUIPMENT AND UTILITIES.

(G) THE RAMP THROAT WIDTH TO BE 4 FEET MEASURED PERPENDICULAR TO THE 7 FOOT THROAT SIDE. THE RAMP THROAT DEPTH TO BE 7 FEET MEASURED FROM THE FACE OF THE CURB TO THE BACK OF THE APPROACH. THE 7 FOOT SIDE OF THE RAMP THROAT TO BE PARALLEL WITH THE EXPECTED PATH OF THE PEDESTRIAN AND NOT PERPENDICULAR TO THE CURB. FOR EXAMPLE: PARALLEL WITH THE CROSS WALK STRIPES OR STOP BAR.

(H) THE RAMP WINGS TO BE 6 FEET MEASURED AT THE CURB FACE FOR 6" STANDARD CURB.

(I) ALL RAMPS TO HAVE A 4 FOOT WIDE CONTINUOUS PATH BEHIND THEM FOR PEDESTRIANS.

(J) ALL CONCRETE ADJOINING THE RADIUS WITHIN AND AROUND THE RAMPS TO BE 5 INCHES THICK WITH 4 INCHES OF 3/4 INCH AGGREGATE BASE.

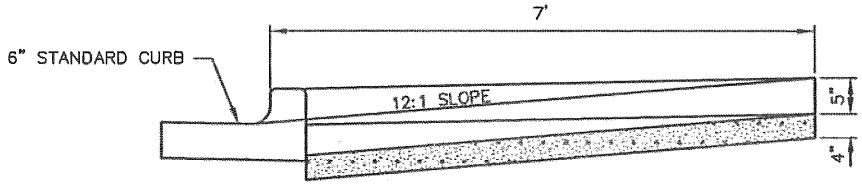

SECTION A–A

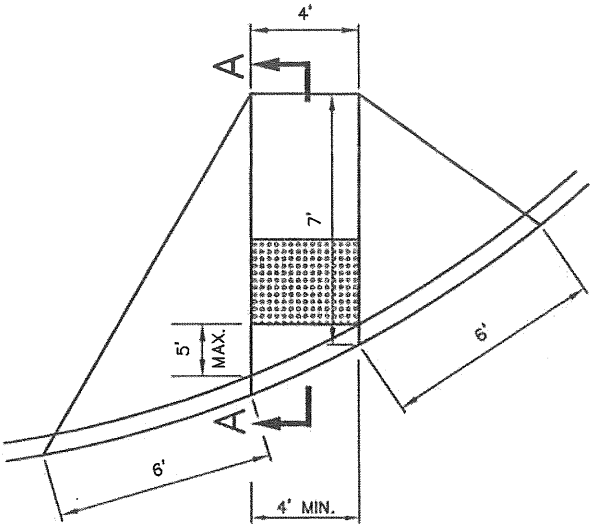

RAMP DETAIL

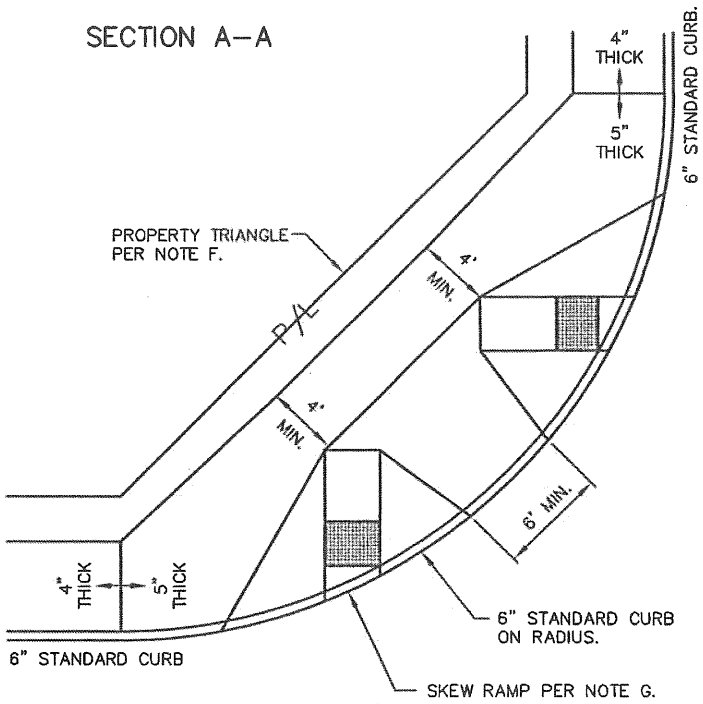

TYPICAL CORNER
30' RADIUS MINIMUM

2015

IDAHO STANDARDS FOR PUBLIC WORKS CONSTRUCTION	PEDESTRIAN RAMP TYPE "A" FOR NEW DEVELOPMENT	STANDARD DRAWING NO. SD–712A

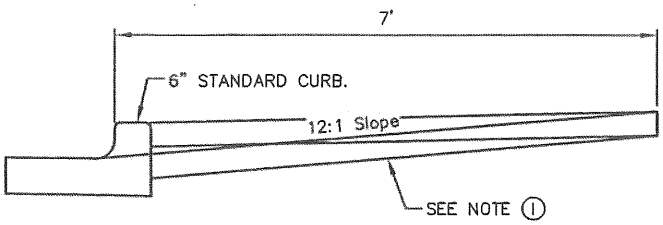

RAMP SECTION

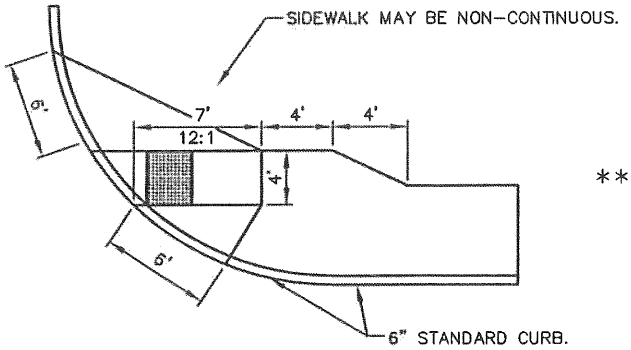

TYPE "C3"
15' RADIUS MINIMUM

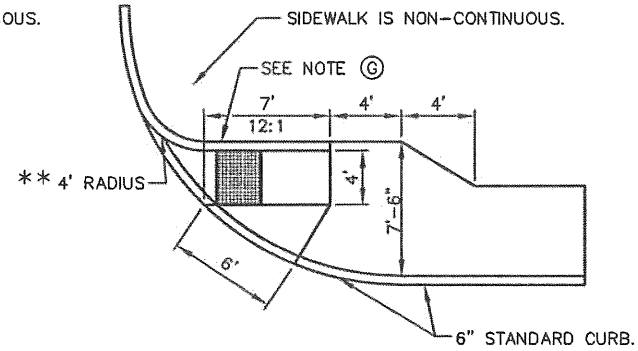

** THIS RADIUS MUST BE INCLUDED FOR RAMP TO BE CONSTRUCTED CORRECTLY.

TYPE "C4"
15' RADIUS MINIMUM

NOTES:

Ⓐ THIS TYPE OF RAMP MAY BE USED FOR LARGE COMMERCIAL APPROACHES WHERE THE STANDARD CONCRETE APPROACH IS NOT REQUIRED. THESE ALSO MAY BE USED FOR ALLEY AND PRIVATE STREET APPROACHES WHERE:

A. THE SIDE WALK IS NOT REQUIRED TO CONTINUE AROUND THE RADIUS

B. A SECOND RAMP IS NOT REQUIRED TO MOVE PEDESTRIANS ACROSS THE PRIMARY STREET.

Ⓑ CURB ON THE RADIUS MUST BE 6" STANDARD CURB FOR SHOWN DIMENSIONS.

Ⓒ ALL RAMP SURFACES MUST CONFORM TO ADA REQUIREMENTS.

Ⓓ THIS TYPE OF CORNER MUST HAVE A SINGLE RAMP TURNED PARALLEL TO THE PRIMARY STREET.

Ⓔ CORNER RADIUS IS 15' AS A MINIMUM.
THE DISTRICT MAY REQUIRED LARGER RADIUS SIZES WHERE LARGER VEHICLE TURNING IS EXPECTED.

Ⓕ THE RAMP THROAT WIDTH MUST BE 4 FEET MEASURED PERPENDICULAR TO THE 7 FOOT THROAT SIDE.
THE RAMP THROAT DEPTH MUST BE 7 FEET MEASURED FROM THE FACE OF THE CURB TO THE BACK OF THE APPROACH.
THE 7 FOOT SIDE OF THE RAMP THROAT MUST BE PARALLEL WITH THE EXPECTED PATH OF THE PEDESTRIAN AND NOT PERPENDICULAR TO THE CURB FOR EXAMPLE: PARALLEL WITH THE CROSS WALK STRIPES, THE STOP BAR, OR THE PRIMARY STREET CURB.

Ⓖ THE RAMP WING MUST BE 6 FEET MEASURED AT THE CURB FACE FOR 6" STANDARD CURB.
THE WING AWAY FROM THE ROAD IS ELIMINATED AND REPLACED WITH A WING SUBSTITUTE THAT IS 6 INCHES HIGH AT THE FACE OF THE STANDARD CURB AND 0 INCHES HIGH AT THE BACK OF THE RAMP AND POURED MONOLITHICALLY WITH THE RAMP.

Ⓗ ALL RAMPS MUST HAVE A MINIMUM 4 FOOT X 4 FOOT LANDING BEHIND THEM FOR PEDESTRIANS.

Ⓘ ALL CONCRETE ADJOINING THE RADIUS WITHIN AND AROUND THE RAMPS SHALL BE 5 INCHES THICK WITH 4 INCHES OF 3/4 INCH AGGREGATE BASE.

Ⓙ RAMP CROSS SLOPE TO BE 1.75% ± 0.25%.

2015

IDAHO STANDARDS FOR PUBLIC WORKS CONSTRUCTION	PEDESTRIAN RAMP TYPE "C" FOR NEW DEVELOPMENT	STANDARD DRAWING NO. SD-712C

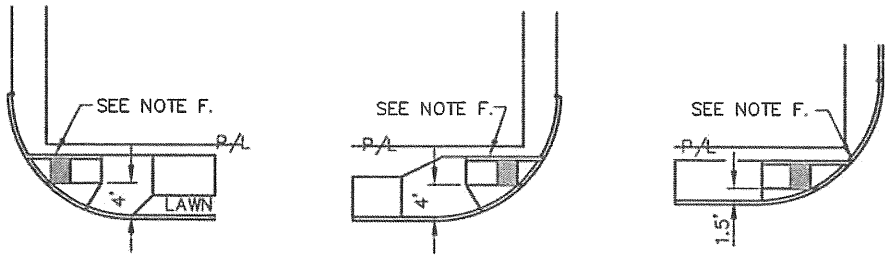

TYPE "C1" TYPE "C2" TYPE "C3"

ONE WING / ONE CURB
FOR NON CONTINUOUS SIDEWALK
10' RADIUS (MIN.)

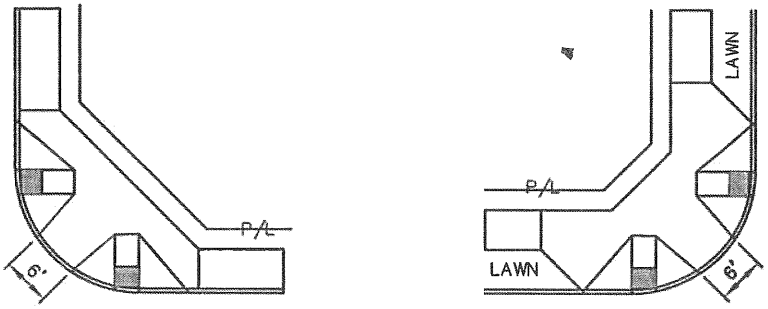

TYPE "A1" TYPE "A2"

TWO WINGS
10' RADIUS (MIN.)

NOTES:

Ⓐ THESE STYLES OF RAMPS MAY BE USED WHERE EXISTING STREET CORNERS NEED NEW CURBS AND RAMPS AND THE RADIUS IS 10 FOOT MIN. OR LARGER.

Ⓑ CURB ON THE RADIUS SHOULD MATCH THE HEIGHT AND STYLE OF THE ADJOINING EXISTING CURB ANY VARIANCE FROM THIS MUST BE APPROVED BY THE OWNER.

Ⓒ RAMP DIMENSIONS ARE BASED ON THE HEIGHT OF THE CURB. SEE TABLE BELOW.

RAMP DIMENSION TABLE

CURB	3"	4"	5"	6"	7"	8"
DEPTH	4'	5'	6'	7'	8'	9'
WING	3'	4'	5'	6'	7'	8'
THROAT	4'	4'	4'	4'	4'	4'

Ⓓ ALL RAMPS TO HAVE A 4 FOOT WIDE CONTINUOUS PATH BEHIND THEM FOR PEDESTRIANS.

Ⓔ ALL RAMP SURFACES MUST BE 12 TO 1 SLOPE TO CONFORM TO A.D.A. REQUIREMENTS.

Ⓕ RAMP WINGS MAY BE REPLACED BY A 6 INCH WIDE CURB IF RAMP SIDE ABUTS A LAWN OR PLANTER. THE CURB IS 0 INCHES TALL AT BACK OF APPROACH AND MATCHES CURB HEIGHT AT THE STREET.

Ⓖ ALL CONCRETE ADJOINING THE RADIUS WITHIN AND AROUND THE RAMPS TO BE 5 INCHES THICK WITH 4 INCHES OF 3/4 INCH AGGREGATE BASE.

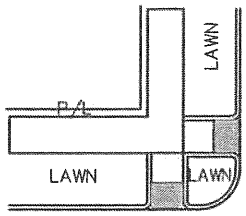

TYPE "F1"
TWO CURBS
2' TO 8' RADIUS ONLY

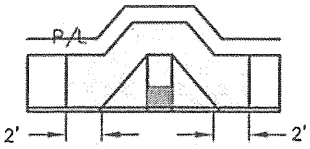

TYPE "G1"
MID BLOCK

CONCRETE
5" THICK
4" THICK

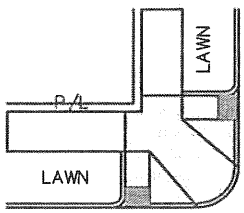

TYPE "E1"

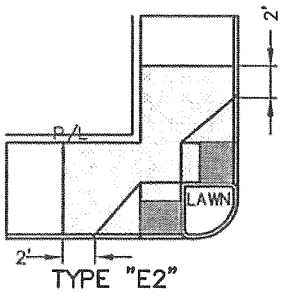

TYPE "E2"

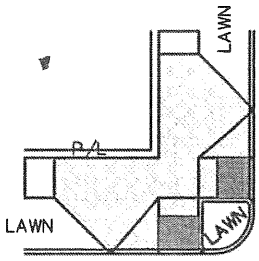

TYPE "E3"

ONE WING / ONE CURB
2' TO 8' RADIUS ONLY

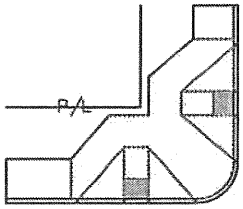

TYPE "D1"

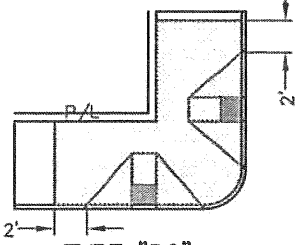

TYPE "D2"

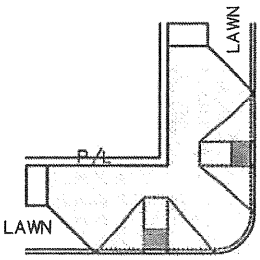

TYPE "D3"

TWO WINGS
2' TO 8' RADIUS ONLY

NOTES:

Ⓐ RAMPS OUTSIDE OF THE RADIUS MAY BE USED WHERE EXISTING STREET CORNERS NEED NEW CURBS AND RAMPS AND THE RADIUS IS BETWEEN 2 AND 8 FEET.

Ⓑ CURB ON THE RADIUS SHOULD MATCH THE HEIGHT AND STYLE OF THE ADJOINING EXISTING CURBS. ANY VARIANCE FROM THIS MUST BE APPROVED BY THE ENGINEER.

Ⓒ ALL RAMP SURFACES TO BE 12 TO 1 SLOPE TO CONFORM TO A.D.A. REQUIREMENTS.

Ⓓ RAMP DIMENSIONS ARE BASED ON THE HEIGHT OF THE CURB. SEE TABLE BELOW.

RAMP DIMENSION TABLE

CURB	3"	4"	5"	6"	7"	8"
DEPTH	4'	5'	6'	7'	8'	9'
WING	3'	4'	5'	6'	7'	8'
THROAT	4'	4'	4'	4'	4'	4'

Ⓔ RAMP WINGS MAY BE REPLACED BY A 6 INCH WIDE CURB IF RAMP SIDE ABUTS A LAWN OR PLANTER. THE CURB IS 0 INCHES TALL AT BACK OF APPROACH AND MATCHES CURB HEIGHT AT THE STREET.

Ⓕ ALL RAMPS MUST HAVE A 4 FOOT WIDE CONTINUOUS PATH BEHIND THEM FOR PEDESTRIANS.

Ⓖ ALL CONCRETE ADJOINING THE RADIUS WITHIN AND AROUND THE RAMPS TO BE 5 INCHES THICK WITH 4 INCHES OF 3/4 INCH AGGREGATE BASE.

2015

IDAHO STANDARDS FOR PUBLIC WORKS CONSTRUCTION	PEDESTRIAN RAMPS OUTSIDE RADIUS FOR MODIFYING EXISTING CORNERS	STANDARD DRAWING NO. SD-712E

NOTES:

(A) CORNER RADIUS AND SIDEWALK ARRANGEMENT WILL VARY.

(B) A.D.A. REQUIRES TRAVELED WAY TO BE 1:12 WITH 4' MIN. WIDTH.

(C) WING CROSS SLOPE VARIES WITH EXISTING CURB HEIGHT REFERENCE CHART BELOW FOR APPROPRIATE DIMENSIONS.

(D) NO SIDEWALK OR CONCRETE LANDING ALLOWED UNLESS WING CROSS SLOPE IS 1:10 MIN.

(E) THIS RAMP IS SUITABLE FOR MID-BLOCK CROSSINGS.

EXISTING CURB HEIGHT

EXISTING SIDEWALK WIDTH	3"	6"	9"	12"
3'	A=4' C=9"	A=4' C=12"	A=4' C=15"	A=4' C=18"
4'	A=4' C=9"	A=4' C=12"	A=4' C=15"	A=4' C=18"
5'	A=4' C=15"	A=4' C=18"	A=4' C=18"	A=4' C=18"
6'	A=5' C=15"	A=5' C=18"	A=5' C=18"	A=5' C=18"

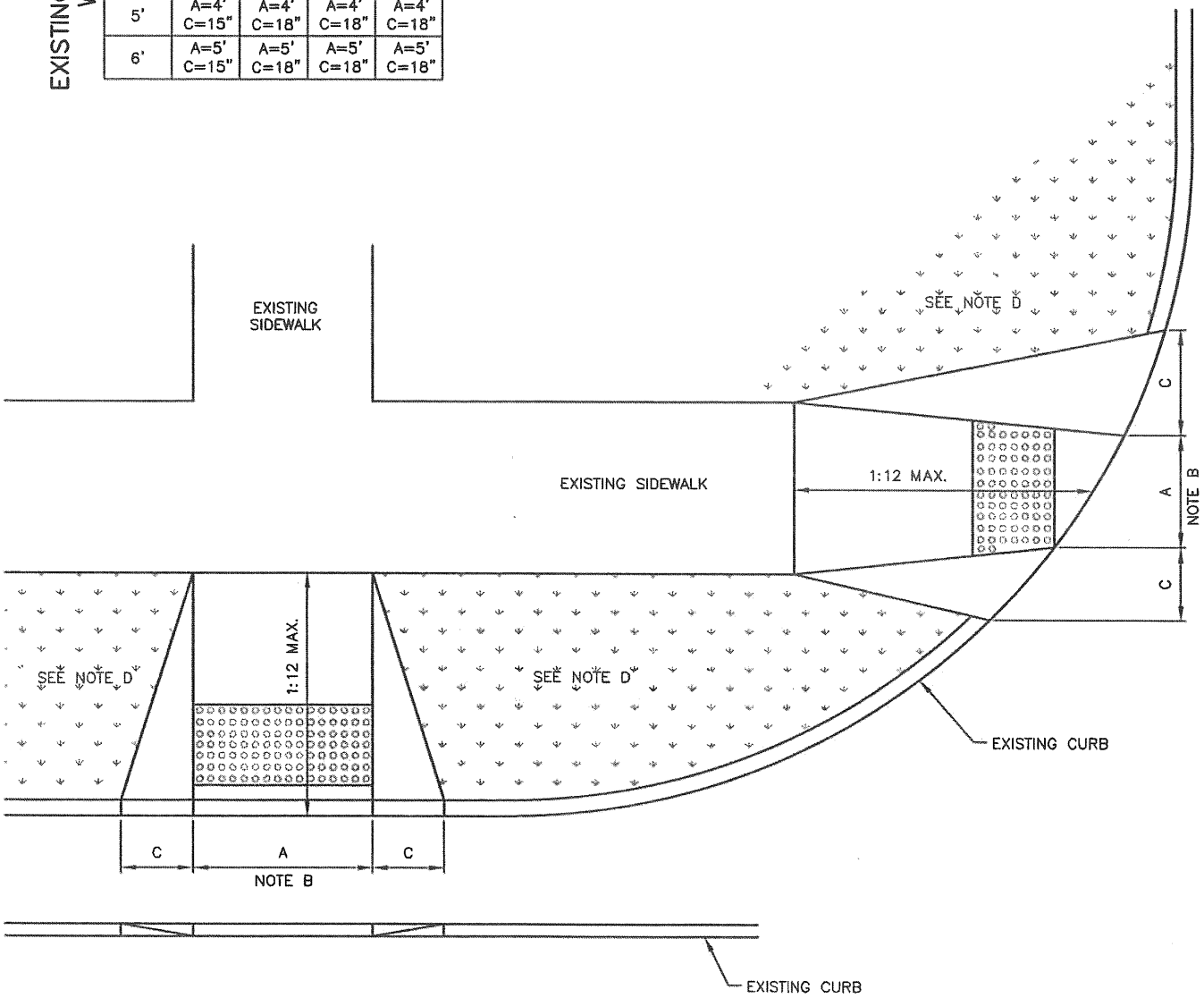

2015

IDAHO STANDARDS FOR PUBLIC WORKS CONSTRUCTION	PEDESTRIAN RAMP TYPE "F" FOR EXISTING CORNERS	STANDARD DRAWING NO. SD-712F

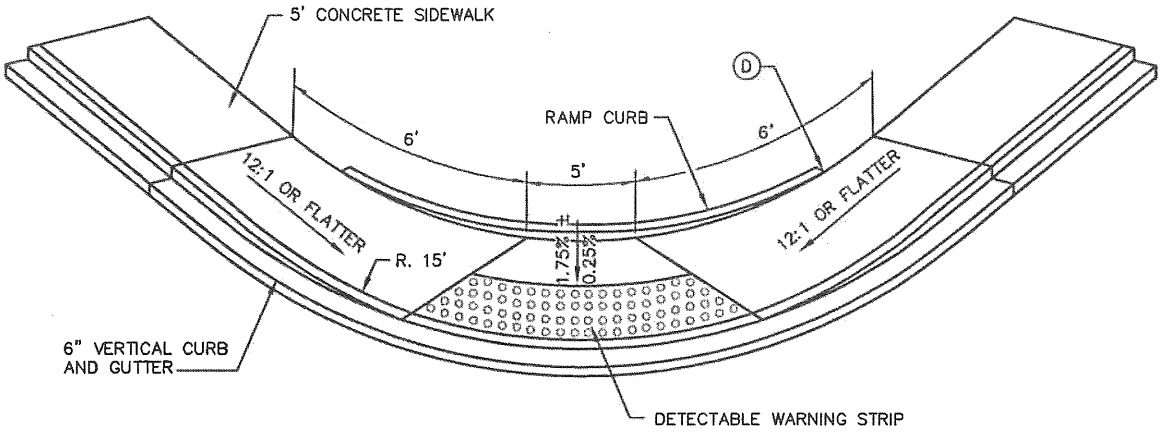

RADIUS

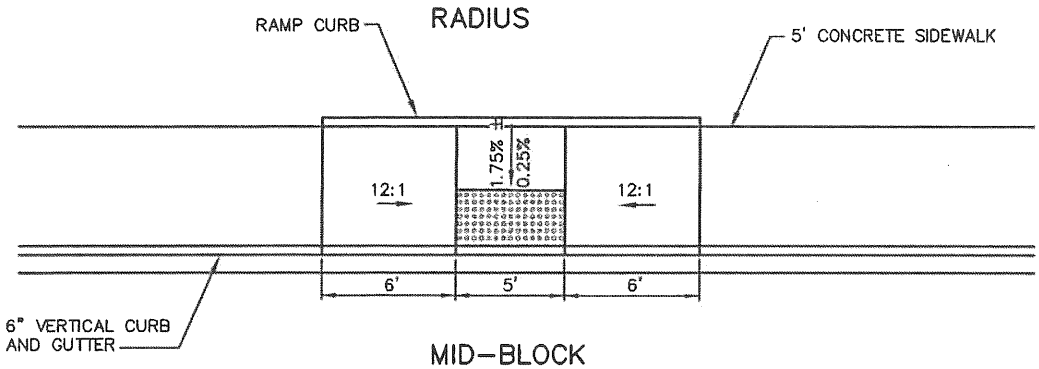

MID-BLOCK

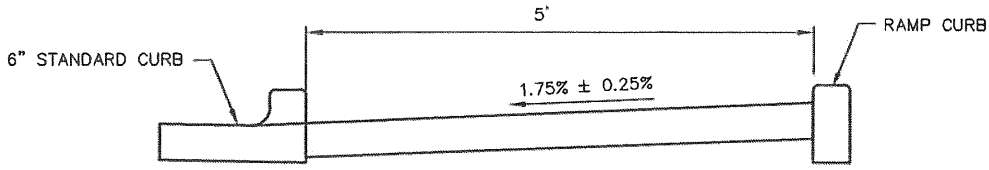

SECTION

NOTES:

(A) THIS TYPE OF RAMP MAY BE USED FOR SIDEWALKS IN AREAS THAT DO NOT HAVE ADEQUATW SPACE FOR LANDINGS REQUIRED TO MEET ADA.

(B) THROAT OF RAMP WILL BE 1.75% ± 0.25% PER ADA REQUIREMENTS.

(C) ALL SIDEWALK SURFACES SLOPING TO PEDESTRIAN RAMP MUST BE 12:1 SLOPE TO CONFORM TO ADA REQUIREMENTS.

(D) CONCRETE CURB WILL BE PLACED AT THE BACK OF THE RAMP AND ADJOINING SLOPING SIDEWALK. HEIGHT OF CURB WILL BE DETERMINED BY THE ADJACENT PROPERTY BEING TIED INTO. CURB WILL BE 0 INCHES HIGH AT THE TOP OF THE SLOPING SIDEWALK.

(E) ALL CONCRETE ADJOING THE RADIUS WITHIN AND AROUND THE RAMPS SHALL BE 5 INCHES THICK WITH 4 INCHES OF 3/4.

(F) SLOPES SHOWN ARE MAXIMUMS. THE CONTRACTOR SHOULD ACCOUNT FOR CONSTRUCTION TOLERANCES TO PREVENT EXCEEDING THE MAXIMUM SLOPES.

IDAHO STANDARDS FOR PUBLIC WORKS CONSTRUCTION	PEDESTRIAN RAMP WITH NO LANDING	STANDARD DRAWING NO. SD-712G

THIS PAGE INTENTIONALLY LEFT BLANK

Appendix F
ITD ADA Curb Ramp Program Application

THIS PAGE INTENTIONALLY LEFT BLANK

PROGRAM OVERVIEW

The Idaho Americans with Disabilities Act (ADA) Curb Ramp Program is a state-administered program that provides funding for projects to address curb ramps on the state highway system. The goal of the program is to provide accessible facilities for pedestrians with disabilities while allowing local jurisdiction flexibility in meeting the required standards. The Idaho Transportation Department (ITD) is allocating $500,000 of state funds annually for this program. Applicants can qualify for up to $60,000 in state funding to construct new or alter existing curb ramps on the state highway system to meet the requirements of the ADA. Funds can only be used for construction purposes. This program provides local communities more control over the design of pedestrian facilities in their communities and makes better economical use of dollars through the use of state funds while addressing accessibility on the state highway system. Applicants applying in 2015 should be prepared to begin construction in May, 2016.

ELIGIBILITY REQUIREMENTS

Eligible applicants include local jurisdictions (cities, counties, highway districts) and tribal governments. Eligible projects are restricted to the construction of curb ramps. Project construction must be completed within 1 year from the execution of the Cooperative Agreement. If the criteria or other requirements of this application are not met, the application will be rejected.

If selected, the applicant's project manager is required to attend the provided Curb Ramp Instruction Class (see Program Schedule for more information).

Successful applicants agree to disperse Curb Ramp Program funds in compliance with Title VI of the Civil Rights Act of 1964, the Civil Rights Restoration Act of 1987, Section 504 of the Rehabilitation Act of 1973, the Age Discrimination Act of 1975, and the Americans with Disabilities Act of 1990 (ADA), to ensure their actions and activities do not discriminate on the basis of race, color, national origin, sex, age, or disability.

SELECTION PROCESS

Project applications can include multiple curb ramp locations. Each curb ramp location will be individually evaluated by a review panel consisting of staff from the following agencies:

- Idaho Transportation Department
- Federal Highways Administration – Idaho Division
- LHTAC

Individual curb ramp improvement projects will be selected for award based on project need as described in the following sections.

PROJECT NEED

The need to improve a curb ramp will be evaluated based on the following criteria.

1. ITD Transition Plan Priority

The ITD Transition Plan prioritizes each non-compliant curb ramps based on location relative to places of interest (demand) and the physical characteristics of the ramp related to compliance. Each curb ramp in the project application will receive a score based on the priority established in the ITD Transition Plan. High priority ramp locations will receive 20 points, medium priority ramp locations will receive 10 points, and low priority ramp locations will receive 5 points. Non-compliant curb ramps on the State Highway system, not listed on the ITD Transition Plan, may be included and will receive 5 points.

2. Previous Awardee History

Applicants that have not met the requirements of prior Cooperative Agreements will be ineligible for funding.

3. New Applicants

Applicants that have not previously been awarded funds will receive preferred status.

REFERENCE MATERIALS

The following reference materials are included to aid a potential applicant in identifying and prioritizing eligible projects.

- ITD ADA Transition Plan – includes a list of non-compliant curb ramps on the State Highway system and its priority/schedule for improvement. http://itd.idaho.gov/ocr/ocrADARESOURCES.aspx
- Sample Cooperative Agreement
- Curb Ramp Standard Drawings H-1 and H-2 Series http://www.itd.idaho.gov/design/StandardDrawings/All_Standards_2014-12.pdf
- Form ITD 0288 Curb and Ramp Inspection *October 2014*

FREQUENTLY ASKED QUESTIONS

The following frequently asked questions are included to aid potential applicants in identifying and addressing potential questions or concerns.

- **When does the awardee receive funding?**
    - The awardee will receive the funds once the agreement is fully executed and they have the notice to proceed. Then a written request for funds can be submitted by the awardee to ITD.

- **How does the awardee receive the funding?**

- The awardee they will receive a check from ITD for the awarded amount after a written request has been received.

- **Are these State Funds or Federal Funds?**
  - State Funds

- **Are Davis-Bacon wages required for Contractors or if the work is completed by City forces?**
  - No. This is not a requirement of using State Funds.

- **Does the ADA Curb Ramp Program have to be bid or can a jurisdiction do some of the work with their own forces? If the jurisdiction can assist, can they use the award to pay for their services? What records does the jurisdiction need to keep?**
  - Yes, awardees can use their own forces. Keep a record of the time and resources utilized as well as all receipts and backup documentation.

- **If the construction bids come in higher than the available funds, can we build only those ramps that are within budget and put the others on hold for future funding?**
  - The awardee will be responsible for providing all funding necessary for the work over and above the funds they are awarded. In the event that there are ramps that aren't going to be completed, the awardee will be required to refund the State the amount paid under their agreement. Additionally, the completion rate will be taken into consideration during the application process. Estimates MUST be accurate as no additional monies are available after award.

- **If the project is advertised for bid and bids come in lower than expected, can the awardee use the surplus available funds to construct additional curb ramps?**
  - The awardee should notify ITD that funds remain and specify which additional curb ramps will be constructed with the surplus funds.

- **Is any additional permit(s) required for construction work?**
  - YES, Due to the associated work being within the highway right of way a form ITD2111, Right of Way Encroachment Application and Permit Other Encroachments, will require the Idaho Transportation Department approval prior to work starting.

- **How are applications submitted? Who is the contact person?**
  - Applications must be submitted via email to Jared.Holyoak@itd.idaho.gov with the subject line "ADA Curb Ramp Application". Jared can be reached at 208-334-8168.

PROGRAM SCHEDULE

Action	Description	Applicable Date / Times	Responsible Party
Call for Applications	Project applications will be made available to the public on the ITD website (www.itd.idaho.gov). Notifications will be sent via LHTAC, the Idaho Association of Idaho Cities, the Idaho Association of Counties, and the bicycle/pedestrian email database.	March 20, 2015	ITD Curb Ramp Grant Officer
Submit applications to ITD	Only electronic copies will be accepted. Send to: jared.holyoak@itd.idaho.gov	April 24, 2015	Applicant
Eligible Applications provided to Review Panel	Ineligible applications will be returned to applicants for potential re-submittal the following year.	April 27, 2015	ITD
Eligible applications reviewed and scored	See Selection Process, described in the previous section, for more detail.	April 27-28, 2015	Review Panel
Recommendations for Award presented to ITD Board	The recommendations are presented to the board for approval and inclusion into the draft ITIP.	June 2015 ITD Board meeting	ITD
ITIP Approval		September 2015	Idaho Transportation Board
Project Awards Announced	ITD will notify individual project sponsors by letter.	September 2015	ITD
Projects Design/ Engineering	Funds from this program can only be used for construction. Local project sponsors are responsible for developing their own design plans as needed.	Sept. 2015 – June 2016	Local Project Sponsor
Attend Training Workshop (REQUIRED)	Each project's project manager **must** attend this training once. The applicant may invite others involved to attend.	Sept. 2015 – Oct. 2015	Local Project Sponsor
Sign Cooperative Agreement	ITD staff will prepare a cooperative agreement for signature. This agreement outlines the responsibilities of both parties and must be approved by appropriate local official (s).	no later than May 1, 2016	ITD/ Local Project Sponsor
Funds made available to Local Project Sponsor	One hundred percent (100%) of the awarded funds will be made available to the Local Project Sponsors after July 1, 2016	July 1, 2016	ITD

Action	Description	Applicable Date / Times	Responsible Party
Project Construction	Projects must be completed within one year from execution of cooperative agreement.		Local Project Sponsor
ITD Final Review	ITD district staff may perform a final site review and inspection for compliance with ADA. Any projects not meeting ADA requirements will be required to make corrections at their own expense.	No later than May 15, 2017	District Office

PROJECT APPLICATION

Only one project application is allowed per Local Project Sponsor. An application can include multiple curb ramps.

SECTION 1 - APPLICANT INFORMATION

Project Sponsor			
Contact Name			
Title			
Phone Number		Email Address	
Address			
Proposed Project Manager/Title			
Phone Number(s):		Email Address:	

SECTION 2 - CURB RAMP APPLICATION REQUIREMENTS

Please provide the following information for each curb ramp location included in your application in the table on the next page. Attach additional pages if needed.

Location: Include the Ramp ID from the ITD ADA Transition Plan. Note that only curb ramp locations on the state highway system are eligible under this program. Off-system locations will not be considered. For ramps not listed in the ITD ADA Transition plan, these should be identified by State Route and cross-street.

Priority: List the priority shown in the ITD ADA Transition Plan or other if the ramp is not listed in the plan.

Cost: Provide the amount of funding requested from ITD for each curb ramp.

CURB RAMP LOCATIONS		
Location **(Include Ramp_ID from ITD ADA Transition Plan)**	**Priority** **(High, Medium, Low, or other)**	**Curb Ramp Cost**

Has the applicant previously been awarded funding under this program?

☐ YES ☐ No

If yes, have the requirements of the previous project's cooperative agreement been satisfied?

☐ Yes ☐ No

How will the construction work be performed?

☐ Applicant's forces ☐ Contractor

Appendix E

Methodology to Compute Level of Service

THIS PAGE INTENTIONALLY LEFT BLANK

Appendix D

Methodology to Compute Level of Service (LOS) for Planning

The following provides a more descriptive definition of roadway congestion.

a **Uncongested** Level of Service A and B are those corridors that generally operate in free-flow conditions. Ability to maneuver is not restricted or only slightly restricted.

a **Minor Congestion** Level of Service C are those corridors where speeds are at or near free flow and the freedom to easily maneuver is noticeably restricted.

a **Moderate Congestion** Level of Service D are those corridors that speeds may decline slightly and the freedom to maneuver is noticeably more limited.

a **Congested** Level of Service E are those corridors where traffic volumes have reached capacity and traffic flow is unstable; Level of Service F is where demand exceeds capacity.

Facility Type and Number of Lanes	A		B		C		D		E		F	
	Range:		*Range:*		*Range:*		*Range:*		*Range:*		*Range:*	
	ADT	V/C Ratio	ADT	V/C Ratio	ADT	V/C Ratio	ADT	V/C Ratio	ADT	V/C Ratio	ADT	V/C Ratio
Urban Collector												
Two Lanes	<4725	<0.45	4725>6300	0.45>0.60	6300>7875	0.60>0.75	7875>8925	0.75>0.85	8925>10500	0.85>1.00	10500>	1.00>
Three Lanes	<5850		5850>7800		7800>9750		9750>11050		11050>13000		13000>	
Four Lanes	<9225		9225>12300		12300>15375		15375>17425		17425>20500		20500>	
Five Lanes	<11250		11250>15000		15000>18750		18750>21250		21250>25000		25000>	
Minor Arterial												
Two Lanes	<5625	<0.45	5625>7500	0.45>0.60	7500>9375	0.60>0.75	9375>10625	0.75>0.85	10625>12500	0.85>1.00	12500>	1.00>
Three Lanes	<7200		7200>9600		9600>12000		12000>13600		13600>16000		16000>	
Four Lanes	<11700		11700>15600		15600>19500		19500>22100		22100>26000		26000>	
Five Lanes	<13950		13950>18600		18600>23250		23250>26350		26350>31000		31000>	
Principal Arterial												
Two Lanes	<6300	<0.45	6300>8400	0.45>0.60	8400>10500	0.60>0.75	10500>12600	0.75>0.90	12600>14000	0.90>1.00	14000>	1.00>
Three Lanes	<8325		8325>11100		11100>13875		13875>16650		16650>18500		18500>	
Four Lanes	<13950		13950>18600		18600>23250		23250>27900		27900>31000		31000>	
Five Lanes	<16650		16650>22200		22200>27750		27750>33300		33300>37000		37000>	
Six Lanes	<21150		21150>28200		28200>35250		35250>42300		42300>47000		47000>	
Seven Lanes	<25200		25200>33600		33600>42000		42000>50400		50400>56000		56000>	
Freeway												
Four Lanes	<29050	<0.35	29050>45650	0.35>0.55	45560>58100	0.55>0.70	58100>74700	0.70>0.90	74700>83000	0.90>1.00	83000>	1.00>
Six Lanes	<43400		43400>68200		68200>86800		86800>111600		111600>124000		124000>	

For collectors and arterials, number of lanes include the center lane/median (i.e. an odd number of lanes indicates dedicated or two-way left-turn lanes)

Example of how LOS and Volume to Capacity (V/C) ratios are determined for a roadway segment:

Woodruff Avenue - 1st Street to 12th Street

Facility Type = Minor Arterial; Number of Lanes = 5; ADT (Traffic Volume) = 23570; Capacity = 31000

LOS = D; V/C Ratio - 23570/31000 = 0.76

THIS PAGE INTENTIONALLY LEFT BLANK

Appendix F

Traffic Count Data

THIS PAGE INTENTIONALLY LEFT BLANK

Weekly 24 Hour Volume Report: 12 GEMSTNE BRDG

Info Line 1 :
Info Line 2 :
GPS Lat/Lon :

Last Connected Device Type : Apollo
Serial Number : 89891
Lanes : 2

Lane #1 Weekly 24 Hour Volume Data 05/14/2012 to 05/20/2012

Time	05/14 MON	05/15 TUE	05/16 WED	05/17 THU	05/18 FRI	Weekday Average	05/19 SAT	05/20 SUN	Weekend Average	Week Average
12 - 1			1	3	2	2	7	5	6	4
1 - 2		1	2	1	0	1	3	4	4	2
2 - 3		0	0	0	0	0	3	4	4	1
3 - 4		1	2	2	1	2	0	0	0	1
4 - 5		1	0	1	0	1	1	1	1	1
5 - 6		2	6	5	4	4	4	1	3	4
6 - 7		6	9	11	10	9	5	6	6	8
7 - 8		44	35	51	42	43	13	8	11	32
8 - 9		96	116	98	104	104	28	15	22	76
9 - 10		50	53	49	55	52	57	41	49	51
10 - 11		28	24	43	37	33	47	57	52	39
11 - 12		48	39	42	45	44	48	52	50	46
12 - 1		66	68	52	67	63	49	62	56	61
1 - 2		34	47	43	36	40	47	67	57	46
2 - 3		29	39	37	38	36	81	67	74	49
3 - 4		92	130	116	117	114	65	70	68	98
4 - 5		51	56	55	56	55	90	46	68	59
5 - 6		42	51	43	63	50	82	64	73	58
6 - 7		35	42	42	65	46	39	44	42	45
7 - 8		25	22	25	42	29	39	42	41	33
8 - 9		18	27	21	26	23	39	27	33	26
9 - 10		11	18	24	30	21	27	38	33	25
10 - 11		7	8	13	12	10	16	11	14	11
11 - 12		2	3	6	6	4	12	3	8	5
TOTALS :		689	798	783	858	786	802	735	775	**781**
% Avg Day :		93%	102%	100%	110%	101%	103%	94%	99%	
AM (12am-10am) Peak Volumes										
15 Minute :		41	52	42	44	45	17	13	14	32
One Hour :		114	122	117	124	118	57	41	50	90
P.H.F. :		0.70	0.59	0.70	0.70	0.66	0.84	0.79	0.89	0.70
PH Begins :		8:15am	8:15am	8:15am	8:30am	8:15am	9:00am	9:00am	9:00am	8:30am
Mid (10am-2pm) Peak Volumes										
15 Minute :		25	20	24	22	21	20	26	19	19
One Hour :		80	68	65	70	70	55	74	63	65
P.H.F. :		0.80	0.85	0.68	0.80	0.83	0.92	0.84	0.83	0.86
PH Begins :		11:45am	12:00pm	11:45am	11:45am	11:45am	12:30pm	12:15pm	12:15pm	11:45am
PM (2pm-12am) Peak Volumes										
15 Minute :		52	56	65	66	60	27	26	25	46
One Hour :		92	130	119	121	114	94	83	78	99
P.H.F. :		0.44	0.58	0.46	0.46	0.47	0.87	0.80	0.89	0.54
PH Begins :		3:00pm	3:00pm	3:15pm	3:30pm	3:00pm	3:45pm	2:45pm	3:15pm	3:00pm

Lane #1 Weekly 24 Hour Volume Data 05/21/2012 to 05/27/2012

Time	05/21 MON	05/22 TUE	05/23 WED	05/24 THU	05/25 FRI	Weekday Average	05/26 SAT	05/27 SUN	Weekend Average	Week Average
12 - 1	6	2	2	1	2	3	3	4	4	3
1 - 2	0	0	4	2	1	1	4	0	2	2
2 - 3	2	2	4	1	1	2	2	2	2	2
3 - 4	0	1	6	3	1	2	1	2	2	2
4 - 5	2	1	3	2	1	2	0	2	1	2
5 - 6	2	7	4	6	9	6	7	4	6	6
6 - 7	12	6	6	7	9	8	6	4	5	7
7 - 8	66	58	51	45	48	54	12	7	10	41
8 - 9	145	143	137	128	40	119	15	15	15	89
9 - 10	61	72	53	62	47	59	39	36	38	53
10 - 11	52	49	49	54	55	52	24	36	30	46
11 - 12	71	54	51	48	76	60	41	27	34	53
12 - 1	110	77	74	68	56	77	31	28	30	63
1 - 2	55	47	45	130	40	63	34	26	30	54
2 - 3	45	79	55	61	50	58	42	32	37	52
3 - 4	142	158	120	77	47	109	38	35	37	88
4 - 5	79	62	48	58	65	62	46	49	48	58
5 - 6	89	70	60	56	48	65	51	28	40	57
6 - 7	68	49	59	44	46	53	39	45	42	50
7 - 8	58	32	42	45	31	42	42	32	37	40
8 - 9	56	39	44	39	36	43	34	25	30	39
9 - 10	25	24	31	33	44	31	18	31	25	29
10 - 11	20	20	9	10	22	16	14	19	17	16
11 - 12	4	3	4	2	10	5	10	9	10	6
TOTALS :	1170	1055	961	982	785	992	553	498	532	**858**
% Avg Day :	136%	123%	112%	114%	91%	116%	64%	58%	62%	

AM (12am-10am) Peak Volumes

15 Minute :	65	59	65	49	20	47	12	14	12	35
One Hour :	156	151	143	141	50	126	39	36	39	96
P.H.F. :	0.60	0.64	0.55	0.72	0.63	0.67	0.81	0.64	0.81	0.69
PH Begins :	8:15am	8:30am	8:30am	8:15am	7:15am	8:15am	9:00am	9:00am	9:00am	8:30am

Mid (10am-2pm) Peak Volumes

15 Minute :	39	30	29	74	21	27	13	12	12	21
One Hour :	117	91	76	144	76	86	45	36	41	70
P.H.F. :	0.75	0.76	0.66	0.49	0.90	0.80	0.87	0.75	0.85	0.83
PH Begins :	11:45am	11:45am	11:45am	12:30pm	11:00am	12:30pm	11:15am	10:00am	11:15am	12:30pm

PM (2pm-12am) Peak Volumes

15 Minute :	62	71	71	23	21	47	18	17	15	37
One Hour :	142	158	120	77	65	109	58	49	48	89
P.H.F. :	0.57	0.56	0.42	0.84	0.86	0.58	0.81	0.77	0.86	0.60
PH Begins :	3:00pm	3:00pm	3:00pm	3:00pm	4:00pm	3:00pm	5:15pm	4:00pm	4:00pm	3:00pm

Lane #1 Weekly 24 Hour Volume Data 05/28/2012 to 06/03/2012

Time	05/28 MON	05/29 TUE	05/30 WED	05/31 THU	06/01 FRI	Weekday Average	06/02 SAT	06/03 SUN	Weekend Average	Week Average
12 - 1	2	3				3				3
1 - 2	5	4				5				5
2 - 3	1	3				2				2
3 - 4	0	0				0				0
4 - 5	2	2				2				2
5 - 6	1	5				3				3
6 - 7	2	12				7				7
7 - 8	5	26				16				16
8 - 9	18	17				20				20
9 - 10	29					29				29
10 - 11	38					38				38
11 - 12	35					35				35
12 - 1	55					55				55
1 - 2	36					36				36
2 - 3	55					55				55
3 - 4	51					51				51
4 - 5	47					47				47
5 - 6	37					37				37
6 - 7	37					37				37
7 - 8	35					35				35
8 - 9	30					30				30
9 - 10	18					18				18
10 - 11	30					30				30
11 - 12	12					12				12
TOTALS :	581	72				603				**603**
% Avg Day :	96%	33%				100%				

AM (12am-10am) Peak Volumes

15 Minute :	9	9	9	9
One Hour :	29	30	29	29
P.H.F. :	0.81	0.83	0.81	0.81
PH Begins :	9:00am	7:15am	9:00am	9:00am

Mid (10am-2pm) Peak Volumes

15 Minute :	19		19	19
One Hour :	60		60	60
P.H.F. :	0.79		0.79	0.79
PH Begins :	12:30pm		12:30pm	12:30pm

PM (2pm-12am) Peak Volumes

15 Minute :	20		20	20
One Hour :	58		58	58
P.H.F. :	0.81		0.81	0.81
PH Begins :	3:30pm		3:30pm	3:30pm

Lane #2 Weekly 24 Hour Volume Data 05/14/2012 to 05/20/2012

Time	05/14 MON	05/15 TUE	05/16 WED	05/17 THU	05/18 FRI	Weekday Average	05/19 SAT	05/20 SUN	Weekend Average	Week Average
12 - 1			3	1	3	2	3	4	4	3
1 - 2		1	1	0	2	1	2	3	3	2
2 - 3		1	0	0	0	0	2	2	2	1
3 - 4		1	4	1	1	2	1	2	2	2
4 - 5		0	0	0	0	0	0	0	0	0
5 - 6		0	1	2	2	1	2	1	2	1
6 - 7		4	5	4	6	5	4	0	2	4
7 - 8		37	25	22	21	26	7	3	5	19
8 - 9		61	80	77	65	71	17	3	10	51
9 - 10		19	29	15	36	25	25	12	19	23
10 - 11		24	27	28	28	27	31	9	20	25
11 - 12		46	42	39	29	39	22	9	16	31
12 - 1		50	59	48	45	51	38	11	25	42
1 - 2		41	54	40	47	46	17	12	15	35
2 - 3		48	32	35	36	38	15	12	14	30
3 - 4		78	78	90	79	81	12	8	10	58
4 - 5		54	55	49	30	47	7	7	7	34
5 - 6		49	36	32	32	37	17	19	18	31
6 - 7		45	37	46	43	43	26	13	20	35
7 - 8		42	42	39	39	41	20	14	17	33
8 - 9		29	49	33	33	36	27	19	23	32
9 - 10		28	20	26	23	24	18	15	17	22
10 - 11		9	7	12	10	10	10	2	6	8
11 - 12		5	4	7	7	6	8	1	5	5
TOTALS :		672	690	646	617	659	331	181	262	**527**
% Avg Day :		135%	131%	123%	117%	125%	63%	34%	50%	
AM (12am-10am) Peak Volumes										
15 Minute :		24	34	30	22	28	9	6	6	19
One Hour :		62	80	77	65	72	25	12	20	51
P.H.F. :		0.65	0.59	0.64	0.74	0.64	0.69	0.50	0.83	0.67
PH Begins :		8:15am	8:00am	8:00am	8:00am	8:00am	9:00am	9:00am	9:00am	8:00am
Mid (10am-2pm) Peak Volumes										
15 Minute :		18	20	16	14	16	12	5	8	13
One Hour :		56	69	53	49	54	38	14	25	43
P.H.F. :		0.78	0.86	0.88	0.88	0.84	0.79	0.70	0.78	0.83
PH Begins :		11:45am	12:15pm	11:45am	11:45am	12:30pm	12:00pm	11:45am	12:00pm	11:45am
PM (2pm-12am) Peak Volumes										
15 Minute :		25	28	29	30	26	10	10	9	18
One Hour :		84	78	90	80	81	29	21	26	57
P.H.F. :		0.84	0.70	0.78	0.67	0.78	0.72	0.53	0.72	0.79
PH Begins :		2:45pm	3:00pm	3:00pm	2:45pm	3:00pm	5:45pm	5:45pm	5:45pm	2:45pm

Lane #2 Weekly 24 Hour Volume Data 05/21/2012 to 05/27/2012

Time	05/21 MON	05/22 TUE	05/23 WED	05/24 THU	05/25 FRI	Weekday Average	05/26 SAT	05/27 SUN	Weekend Average	Week Average
12 - 1	3	2	0	3	5	3	3	2	3	3
1 - 2	0	0	0	2	2	1	3	1	2	1
2 - 3	1	0	2	1	2	1	3	1	2	1
3 - 4	0	0	1	1	0	0	2	1	2	1
4 - 5	0	0	0	0	1	0	1	6	4	1
5 - 6	0	0	2	3	1	1	1	2	2	1
6 - 7	0	4	2	4	2	2	2	1	2	2
7 - 8	9	9	19	20	23	16	5	1	3	12
8 - 9	49	37	63	74	27	50	21	5	13	39
9 - 10	12	13	18	20	21	17	15	12	14	16
10 - 11	11	20	33	33	38	27	16	20	18	24
11 - 12	22	19	44	38	28	30	42	31	37	32
12 - 1	21	35	52	70	40	44	22	32	27	39
1 - 2	17	18	25	61	55	35	30	27	29	33
2 - 3	36	14	36	51	60	39	29	27	28	36
3 - 4	58	37	76	70	49	58	37	37	37	52
4 - 5	24	32	42	44	52	39	41	22	32	37
5 - 6	20	44	53	53	53	45	45	22	34	41
6 - 7	40	45	49	49	55	48	22	14	18	39
7 - 8	25	32	33	34	40	33	31	22	27	31
8 - 9	21	30	39	46	51	37	23	32	28	35
9 - 10	17	24	33	39	26	28	21	16	19	25
10 - 11	4	17	7	16	20	13	9	15	12	13
11 - 12	2	4	4	6	16	6	8	5	7	6
TOTALS :	392	436	633	738	667	573	432	354	400	**520**
% Avg Day :	75%	84%	122%	142%	128%	110%	83%	68%	77%	
AM (12am-10am) Peak Volumes										
15 Minute :	18	17	21	29	9	18	8	5	5	13
One Hour :	50	41	63	74	30	51	25	12	15	40
P.H.F. :	0.69	0.60	0.75	0.64	0.83	0.71	0.78	0.60	0.75	0.77
PH Begins :	8:15am	8:30am	8:00am	8:00am	7:30am	8:00am	8:15am	9:00am	8:15am	8:00am
Mid (10am-2pm) Peak Volumes										
15 Minute :	8	11	20	25	17	13	15	12	11	12
One Hour :	24	35	57	82	55	46	42	37	38	42
P.H.F. :	0.86	0.80	0.71	0.82	0.86	0.88	0.70	0.77	0.86	0.88
PH Begins :	10:45am	12:00pm	11:45am	12:15pm	1:00pm	12:15pm	11:00am	12:30pm	11:00am	12:15pm
PM (2pm-12am) Peak Volumes										
15 Minute :	20	14	26	24	20	18	15	13	11	16
One Hour :	59	45	86	70	62	58	51	37	38	52
P.H.F. :	0.74	0.87	0.83	0.73	0.82	0.81	0.85	0.71	0.86	0.81
PH Begins :	2:45pm	6:00pm	2:45pm	3:00pm	2:15pm	2:45pm	4:15pm	3:00pm	3:00pm	2:45pm

Lane #2 Weekly 24 Hour Volume Data 05/28/2012 to 06/03/2012

Time	05/28 MON	05/29 TUE	05/30 WED	05/31 THU	06/01 FRI	Weekday Average	06/02 SAT	06/03 SUN	Weekend Average	Week Average
12 - 1	7	0				4				4
1 - 2	1	1				1				1
2 - 3	3	0				2				2
3 - 4	1	2				2				2
4 - 5	1	1				1				1
5 - 6	1	0				1				1
6 - 7	1	5				3				3
7 - 8	0	21				11				11
8 - 9	12	13				14				14
9 - 10	21					21				21
10 - 11	26					26				26
11 - 12	27					27				27
12 - 1	29					29				29
1 - 2	44					44				44
2 - 3	36					36				36
3 - 4	33					33				33
4 - 5	35					35				35
5 - 6	39					39				39
6 - 7	33					33				33
7 - 8	45					45				45
8 - 9	33					33				33
9 - 10	21					21				21
10 - 11	18					18				18
11 - 12	10					10				10
TOTALS :	477	43				489				**489**
% Avg Day :	98%	24%				100%				

AM (12am-10am) Peak Volumes

15 Minute :	8	8	8	8
One Hour :	21	21	21	21
P.H.F. :	0.66	0.66	0.66	0.66
PH Begins :	9:00am	7:00am	9:00am	9:00am

Mid (10am-2pm) Peak Volumes

15 Minute :	17		17	17
One Hour :	44		44	44
P.H.F. :	0.65		0.65	0.65
PH Begins :	1:00pm		1:00pm	1:00pm

PM (2pm-12am) Peak Volumes

15 Minute :	17		17	17
One Hour :	45		45	45
P.H.F. :	0.66		0.66	0.66
PH Begins :	7:00pm		7:00pm	7:00pm

Weekly 24 Hour Volume Report: 12ST BOISE BRDG

Info Line 1 :
Info Line 2 :
GPS Lat/Lon :

Last Connected Device Type : Apollo
Serial Number : 89892
Lanes : 2

Lane #1 Weekly 24 Hour Volume Data 05/14/2012 to 05/20/2012

Time	05/14 MON	05/15 TUE	05/16 WED	05/17 THU	05/18 FRI	Weekday Average	05/19 SAT	05/20 SUN	Weekend Average	Week Average
12 - 1			14	8	3	8	15	10	13	10
1 - 2		2	7	3	2	4	3	7	5	4
2 - 3		2	5	4	2	3	2	2	2	3
3 - 4		6	27	2	3	10	4	5	5	8
4 - 5		16	10	6	5	9	2	4	3	7
5 - 6		29	25	33	20	27	11	2	7	20
6 - 7		80	71	69	109	82	34	17	26	63
7 - 8		250	240	215	219	231	50	28	39	167
8 - 9		124	142	109	138	128	111	30	71	109
9 - 10		101	145	85	112	111	89	48	69	97
10 - 11		107	102	124	116	112	103	75	89	105
11 - 12		127	115	125	138	126	90	69	80	111
12 - 1		249	273	222	245	247	114	101	108	201
1 - 2		161	158	110	143	143	113	136	125	137
2 - 3		203	222	224	227	219	66	96	81	173
3 - 4		312	358	358	335	341	90	85	88	256
4 - 5		176	162	153	130	155	88	80	84	132
5 - 6		135	151	148	138	143	115	92	104	130
6 - 7		124	144	190	129	147	92	80	86	127
7 - 8		76	116	124	115	108	79	64	72	96
8 - 9		117	101	114	130	116	81	77	79	103
9 - 10		62	102	56	78	75	69	48	59	69
10 - 11		30	51	35	49	41	42	18	30	38
11 - 12		16	10	18	20	16	13	4	9	14
TOTALS :		2505	2751	2535	2606	2602	1476	1178	1334	**2180**
% Avg Day :		120%	126%	116%	120%	119%	68%	54%	61%	
AM (12am-10am) Peak Volumes										
15 Minute :		88	90	74	99	88	32	16	20	62
One Hour :		258	256	220	233	242	111	48	71	177
P.H.F. :		0.73	0.71	0.74	0.59	0.69	0.87	0.75	0.89	0.71
PH Begins :		7:15am	7:15am	7:15am	7:15am	7:15am	8:00am	9:00am	8:00am	7:15am
Mid (10am-2pm) Peak Volumes										
15 Minute :		115	141	89	116	115	40	39	39	87
One Hour :		263	290	222	259	256	118	136	126	207
P.H.F. :		0.57	0.51	0.62	0.56	0.56	0.89	0.87	0.81	0.59
PH Begins :		12:15pm	12:15pm	12:00pm	12:15pm	12:15pm	11:45am	1:00pm	1:00pm	12:15pm
PM (2pm-12am) Peak Volumes										
15 Minute :		154	202	164	176	174	37	36	30	123
One Hour :		395	457	437	432	431	115	100	105	314
P.H.F. :		0.64	0.57	0.67	0.61	0.62	0.82	0.83	0.88	0.64
PH Begins :		2:45pm	2:45pm	2:45pm	2:45pm	2:45pm	5:00pm	2:15pm	5:00pm	2:45pm

Lane #1 Weekly 24 Hour Volume Data 05/21/2012 to 05/27/2012

Time	05/21 MON	05/22 TUE	05/23 WED	05/24 THU	05/25 FRI	Weekday Average	05/26 SAT	05/27 SUN	Weekend Average	Week Average
12 - 1	5	0	2	8	9	5	8	11	10	6
1 - 2	0	4	2	1	2	2	2	13	8	3
2 - 3	4	2	2	6	4	4	2	4	3	3
3 - 4	1	0	7	0	0	2	0	10	5	3
4 - 5	14	12	9	14	9	12	3	81	42	20
5 - 6	32	25	27	24	16	25	5	6	6	19
6 - 7	82	68	70	71	52	69	15	14	15	53
7 - 8	222	241	192	169	156	196	33	20	27	148
8 - 9	128	125	174	195	139	152	43	41	42	121
9 - 10	110	122	125	99	105	112	81	52	67	99
10 - 11	105	89	140	110	116	112	81	74	78	102
11 - 12	122	112	279	283	136	186	104	90	97	161
12 - 1	254	351	135	131	230	220	103	91	97	185
1 - 2	101	146	235	145	149	155	76	120	98	139
2 - 3	225	215	253	208	157	212	89	82	86	176
3 - 4	334	319	272	289	242	291	69	72	71	228
4 - 5	147	115	110	129	118	124	81	77	79	111
5 - 6	114	150	138	173	150	145	78	72	75	125
6 - 7	166	123	151	190	124	151	59	73	66	127
7 - 8	79	95	103	79	81	87	75	70	73	83
8 - 9	102	102	116	117	65	100	108	43	76	93
9 - 10	34	74	88	63	96	71	73	40	57	67
10 - 11	30	24	50	42	58	41	35	46	41	41
11 - 12	7	10	15	14	24	14	19	37	28	18
TOTALS :	2418	2524	2695	2560	2238	2488	1242	1239	1247	**2131**
% Avg Day :	113%	118%	126%	120%	105%	117%	58%	58%	59%	
AM (12am-10am) Peak Volumes										
15 Minute :	82	89	84	79	55	73	31	75	38	53
One Hour :	226	241	268	247	185	228	81	87	68	171
P.H.F. :	0.69	0.68	0.80	0.78	0.84	0.78	0.65	0.29	0.77	0.81
PH Begins :	7:15am	7:00am	7:30am	7:30am	7:30am	7:30am	9:00am	3:30am	9:00am	7:30am
Mid (10am-2pm) Peak Volumes										
15 Minute :	116	184	137	153	93	94	44	37	33	76
One Hour :	254	382	297	302	244	235	113	120	113	200
P.H.F. :	0.55	0.52	0.54	0.49	0.66	0.63	0.64	0.81	0.86	0.66
PH Begins :	12:00pm	12:15pm	11:30am	11:30am	12:15pm	11:45am	11:45am	1:00pm	11:45am	11:45am
PM (2pm-12am) Peak Volumes										
15 Minute :	159	195	154	136	99	145	33	35	31	108
One Hour :	449	416	395	370	271	381	119	90	87	292
P.H.F. :	0.71	0.53	0.64	0.68	0.68	0.66	0.93	0.80	0.70	0.68
PH Begins :	2:45pm	2:45pm	2:45pm	2:45pm	2:45pm	2:45pm	8:15pm	2:15pm	2:00pm	2:45pm

Lane #1 Weekly 24 Hour Volume Data 05/28/2012 to 06/03/2012

Time	05/28 MON	05/29 TUE	05/30 WED	05/31 THU	06/01 FRI	Weekday Average	06/02 SAT	06/03 SUN	Weekend Average	Week Average
12 - 1	13	5				9				9
1 - 2	0	0				0				0
2 - 3	4	2				3				3
3 - 4	4	2				3				3
4 - 5	4	12				8				8
5 - 6	5	22				14				14
6 - 7	20	62				41				41
7 - 8	13	79				46				46
8 - 9	34					34				34
9 - 10	54					54				54
10 - 11	86					86				86
11 - 12	88					88				88
12 - 1	103					103				103
1 - 2	150					150				150
2 - 3	103					103				103
3 - 4	110					110				110
4 - 5	83					83				83
5 - 6	121					121				121
6 - 7	88					88				88
7 - 8	78					78				78
8 - 9	70					70				70
9 - 10	54					54				54
10 - 11	43					43				43
11 - 12	29					29				29
TOTALS :	1357	184				1418				**1418**
% Avg Day :	96%	39%				100%				

AM (12am-10am) Peak Volumes

15 Minute :	21	27	21	21
One Hour :	54	79	54	54
P.H.F. :	0.64	0.73	0.64	0.64
PH Begins :	9:00am	7:00am	9:00am	9:00am

Mid (10am-2pm) Peak Volumes

15 Minute :	46		46	46
One Hour :	150		150	150
P.H.F. :	0.82		0.82	0.82
PH Begins :	1:00pm		1:00pm	1:00pm

PM (2pm-12am) Peak Volumes

15 Minute :	45		45	45
One Hour :	121		121	121
P.H.F. :	0.67		0.67	0.67
PH Begins :	5:00pm		5:00pm	5:00pm

Lane #2 Weekly 24 Hour Volume Data 05/14/2012 to 05/20/2012

Time	05/14 MON	05/15 TUE	05/16 WED	05/17 THU	05/18 FRI	Weekday Average	05/19 SAT	05/20 SUN	Weekend Average	Week Average
12 - 1			14	14	5	11	21	16	19	14
1 - 2		7	9	3	1	5	5	7	6	5
2 - 3		1	9	2	1	3	4	1	3	3
3 - 4		5	17	3	3	7	4	3	4	6
4 - 5		12	7	2	5	7	2	1	2	5
5 - 6		9	12	11	9	10	7	0	4	8
6 - 7		53	32	38	79	51	19	11	15	39
7 - 8		270	226	256	251	251	34	26	30	177
8 - 9		107	155	99	108	117	80	27	54	96
9 - 10		69	121	69	92	88	65	37	51	76
10 - 11		88	71	98	97	89	73	72	73	83
11 - 12		139	122	99	115	119	95	56	76	104
12 - 1		224	225	196	219	216	113	114	114	182
1 - 2		169	221	139	141	168	103	111	107	147
2 - 3		136	161	144	175	154	109	103	106	138
3 - 4		230	211	268	197	227	97	110	104	186
4 - 5		170	153	160	133	154	97	99	98	135
5 - 6		167	197	191	138	173	112	121	117	154
6 - 7		130	151	183	155	155	102	91	97	135
7 - 8		101	110	120	117	112	70	70	70	98
8 - 9		100	102	87	124	103	90	81	86	97
9 - 10		60	127	65	85	84	75	50	63	77
10 - 11		36	49	45	41	43	58	26	42	43
11 - 12		22	14	22	27	21	24	7	16	19
TOTALS :		2305	2516	2314	2318	2368	1459	1240	1357	**2027**
% Avg Day :		119%	124%	114%	114%	117%	72%	61%	67%	
AM (12am-10am) Peak Volumes										
15 Minute :		119	95	106	115	109	24	15	16	75
One Hour :		279	230	256	259	256	84	37	56	182
P.H.F. :		0.59	0.61	0.60	0.56	0.59	0.88	0.62	0.88	0.61
PH Begins :		7:15am	7:15am	7:00am	7:15am	7:15am	8:15am	9:00am	8:15am	7:15am
Mid (10am-2pm) Peak Volumes										
15 Minute :		80	101	60	78	80	36	38	31	63
One Hour :		256	312	225	244	256	115	133	115	209
P.H.F. :		0.80	0.77	0.94	0.78	0.80	0.80	0.88	0.93	0.83
PH Begins :		12:15pm	12:30pm	12:15pm	12:30pm	12:30pm	11:45am	12:45pm	12:15pm	12:15pm
PM (2pm-12am) Peak Volumes										
15 Minute :		99	94	88	80	88	40	37	34	67
One Hour :		247	249	286	243	257	115	121	118	207
P.H.F. :		0.62	0.66	0.81	0.76	0.73	0.93	0.82	0.87	0.77
PH Begins :		2:45pm	2:45pm	2:45pm	2:45pm	2:45pm	5:30pm	5:00pm	5:00pm	2:45pm

Lane #2 Weekly 24 Hour Volume Data 05/21/2012 to 05/27/2012

Time	05/21 MON	05/22 TUE	05/23 WED	05/24 THU	05/25 FRI	Weekday Average	05/26 SAT	05/27 SUN	Weekend Average	Week Average
12 - 1	7	5	4	9	6	6	15	13	14	8
1 - 2	0	2	5	5	4	3	9	18	14	6
2 - 3	3	1	2	2	4	2	7	3	5	3
3 - 4	2	2	6	2	2	3	2	15	9	4
4 - 5	8	8	2	8	4	6	1	34	18	9
5 - 6	12	6	10	9	3	8	1	3	2	6
6 - 7	46	39	43	32	28	38	5	7	6	29
7 - 8	249	267	185	166	176	209	23	18	21	155
8 - 9	106	99	148	184	103	128	34	25	30	100
9 - 10	82	100	113	87	95	95	60	51	56	84
10 - 11	93	93	142	103	102	107	68	78	73	97
11 - 12	114	125	151	170	118	136	81	82	82	120
12 - 1	227	263	183	174	196	209	80	84	82	172
1 - 2	129	204	204	177	160	175	68	103	86	149
2 - 3	162	178	181	159	170	170	86	82	84	145
3 - 4	218	193	196	207	167	196	84	96	90	166
4 - 5	131	136	122	120	116	125	89	91	90	115
5 - 6	153	182	167	183	172	171	88	75	82	146
6 - 7	147	159	163	203	138	162	85	87	86	140
7 - 8	103	135	130	125	90	117	86	81	84	107
8 - 9	104	90	97	119	80	98	151	51	101	99
9 - 10	43	80	87	64	98	74	66	50	58	70
10 - 11	26	32	39	49	49	39	44	57	51	42
11 - 12	13	11	20	16	25	17	22	39	31	21
TOTALS :	2178	2410	2400	2373	2106	2294	1255	1243	1255	**1993**
% Avg Day :	109%	121%	120%	119%	106%	115%	63%	62%	63%	
AM (12am-10am) Peak Volumes										
15 Minute :	107	106	79	87	61	80	23	31	23	58
One Hour :	256	267	253	245	192	238	60	51	56	176
P.H.F. :	0.60	0.63	0.80	0.70	0.79	0.74	0.65	0.55	0.61	0.76
PH Begins :	7:15am	7:00am	7:30am	7:30am	7:15am	7:15am	9:00am	9:00am	9:00am	7:15am
Mid (10am-2pm) Peak Volumes										
15 Minute :	97	113	76	82	60	73	25	34	25	59
One Hour :	244	335	240	220	207	246	87	103	87	200
P.H.F. :	0.63	0.74	0.79	0.67	0.86	0.84	0.87	0.76	0.87	0.85
PH Begins :	12:15pm	12:15pm	12:30pm	12:30pm	12:15pm	12:30pm	10:45am	1:00pm	12:30pm	12:30pm
PM (2pm-12am) Peak Volumes										
15 Minute :	89	93	90	72	58	78	54	31	32	62
One Hour :	265	237	254	233	196	234	155	98	106	192
P.H.F. :	0.74	0.64	0.71	0.84	0.84	0.75	0.72	0.88	0.83	0.77
PH Begins :	2:45pm	2:30pm	2:30pm	2:45pm	2:30pm	2:30pm	7:45pm	2:30pm	7:45pm	2:30pm

Lane #2 Weekly 24 Hour Volume Data 05/28/2012 to 06/03/2012

Time	05/28 MON	05/29 TUE	05/30 WED	05/31 THU	06/01 FRI	Weekday Average	06/02 SAT	06/03 SUN	Weekend Average	Week Average
12 - 1	16	4				10				10
1 - 2	2	1				2				2
2 - 3	3	6				5				5
3 - 4	5	3				4				4
4 - 5	5	7				6				6
5 - 6	3	4				4				4
6 - 7	13	37				25				25
7 - 8	13	52				33				33
8 - 9	27					27				27
9 - 10	38					38				38
10 - 11	65					65				65
11 - 12	80					80				80
12 - 1	91					91				91
1 - 2	135					135				135
2 - 3	116					116				116
3 - 4	130					130				130
4 - 5	88					88				88
5 - 6	126					126				126
6 - 7	81					81				81
7 - 8	98					98				98
8 - 9	93					93				93
9 - 10	57					57				57
10 - 11	40					40				40
11 - 12	29					29				29
TOTALS :	1354	114				1383				**1383**
% Avg Day :	98%	25%				100%				

AM (12am-10am) Peak Volumes

15 Minute :	13	26	14	14
One Hour :	38	52	38	38
P.H.F. :	0.73	0.50	0.73	0.73
PH Begins :	9:00am	7:00am	9:00am	9:00am

Mid (10am-2pm) Peak Volumes

15 Minute :	48		48	48
One Hour :	135		135	135
P.H.F. :	0.70		0.70	0.70
PH Begins :	1:00pm		1:00pm	1:00pm

PM (2pm-12am) Peak Volumes

15 Minute :	43		43	43
One Hour :	137		137	137
P.H.F. :	0.86		0.86	0.86
PH Begins :	2:45pm		2:45pm	2:45pm

Weekly 24 Hour Volume Report: 2ND BOISE BRDGE

Info Line 1 :
Info Line 2 :
GPS Lat/Lon :

Last Connected Device Type : Apollo
Serial Number : 90551
Lanes : 2

Lane #1 Weekly 24 Hour Volume Data 05/13/2013 to 05/19/2013

Time	05/13 MON	05/14 TUE	05/15 WED	05/16 THU	05/17 FRI	Weekday Average	05/18 SAT	05/19 SUN	Weekend Average	Week Average
- AM -										
12 - 1					3	3	0	2	1	2
1 - 2					0	0	0	1	1	0
2 - 3					1	1	0	0	0	0
3 - 4					2	2	0	1	1	1
4 - 5				1	0	1	2	0	1	1
5 - 6				0	3	2	0	0	0	1
6 - 7				1	4	3	2	1	2	2
7 - 8				10	3	7	3	5	4	5
8 - 9				12	8	10	8	4	6	8
9 - 10				4	9	7	14	7	11	9
10 - 11				6	6	6	13	14	14	10
11 - 12				6	13	10	6	7	7	8
- PM -										
12 - 1				9	9	9	12	5	9	9
1 - 2				8	6	7	11	12	12	9
2 - 3				12	12	12	9	10	10	11
3 - 4				8	8	8	8	9	9	8
4 - 5				22	6	14	12	13	13	13
5 - 6				13	13	13	11	13	12	13
6 - 7				15	10	13	9	6	8	10
7 - 8				6	11	9	11	3	7	8
8 - 9				9	12	11	8	10	9	10
9 - 10				4	12	8	5	5	5	7
10 - 11				3	5	4	4	2	3	4
11 - 12				0	5	3	0	0	0	1
TOTALS :				149	161	163	148	130	145	**150**
% Avg Day :				119%	107%	109%	99%	87%	97%	
AM (12am-10am) Peak Volumes										
15 Minute :				5	3	4	6	3	4	3
One Hour :				13	9	11	14	7	12	9
P.H.F. :				0.65	0.75	0.69	0.88	0.58	0.75	0.75
PH Begins :				7:45am	8:45am	8:00am	9:00am	9:00am	9:00am	7:30am
Mid (10am-2pm) Peak Volumes										
15 Minute :				4	8	5	5	5	5	4
One Hour :				9	13	10	13	14	15	11
P.H.F. :				0.56	0.41	0.50	0.65	0.70	0.75	0.69
PH Begins :				11:45am	10:15am	10:15am	10:00am	10:00am	10:00am	10:15am
PM (2pm-12am) Peak Volumes										
15 Minute :				9	7	7	7	6	6	5
One Hour :				25	16	19	12	17	15	16
P.H.F. :				0.69	0.67	0.68	0.43	0.71	0.63	0.80
PH Begins :				4:30pm	2:30pm	4:30pm	3:45pm	4:30pm	4:30pm	4:30pm

Lane #1 Weekly 24 Hour Volume Data 05/20/2013 to 05/26/2013

Time	05/20 MON	05/21 TUE	05/22 WED	05/23 THU	05/24 FRI	Weekday Average	05/25 SAT	05/26 SUN	Weekend Average	Week Average
- AM -										
12 - 1	0	0	1	3	0	1				1
1 - 2	0	2	0	0	1	1				1
2 - 3	0	1	0	1	0	0				0
3 - 4	0	0	1	2	1	1				1
4 - 5	1	3	1	0	0	1				1
5 - 6	0	2	0	2	0	1				1
6 - 7	5	3	3	6		4				4
7 - 8	6	6	8	2		6				6
8 - 9	9	15	9	10		11				11
9 - 10	7	6	7	6		7				7
10 - 11	5	3	3	4		4				4
11 - 12	12	12	6	15		11				11
- PM -										
12 - 1	11	4	4	9		7				7
1 - 2	11	11	11	10		11				11
2 - 3	10	15	4	10		10				10
3 - 4	14	11	14	13		13				13
4 - 5	16	15	8	5		11				11
5 - 6	12	18	15	13		15				15
6 - 7	17	14	13	16		15				15
7 - 8	10	6	12	8		9				9
8 - 9	7	4	11	8		8				8
9 - 10	7	3	7	5		6				6
10 - 11	8	1	2	2		3				3
11 - 12	0	0	3	2		1				1
TOTALS :	168	155	143	152	2	157				**157**
% Avg Day :	107%	99%	91%	97%	5%	100%				

AM (12am-10am) Peak Volumes

15 Minute :	4	5	6	4	1	3				3
One Hour :	10	15	12	10	1	11				11
P.H.F. :	0.83	0.75	0.50	0.83	0.25	0.92				0.92
PH Begins :	7:30am	8:00am	7:30am	8:00am	0:15am	8:00am				8:00am

Mid (10am-2pm) Peak Volumes

15 Minute :	6	5	4	6		4				4
One Hour :	14	12	11	15		12				12
P.H.F. :	0.70	0.60	0.69	0.63		0.75				0.75
PH Begins :	11:45am	11:00am	1:00pm	11:00am		11:00am				11:00am

PM (2pm-12am) Peak Volumes

15 Minute :	8	11	8	7		5				5
One Hour :	19	21	16	17		15				15
P.H.F. :	0.68	0.48	0.57	0.71		0.75				0.75
PH Begins :	3:45pm	4:15pm	6:45pm	6:15pm		2:45pm				2:45pm

Lane #2 Weekly 24 Hour Volume Data 05/13/2013 to 05/19/2013

Time	05/13 MON	05/14 TUE	05/15 WED	05/16 THU	05/17 FRI	Weekday Average	05/18 SAT	05/19 SUN	Weekend Average	Week Average
- AM -										
12 - 1					0	0	3	2	3	2
1 - 2					1	1	2	0	1	1
2 - 3					0	0	1	1	1	1
3 - 4					0	0	0	3	2	1
4 - 5				0	0	0	0	0	0	0
5 - 6				0	0	0	0	0	0	0
6 - 7				0	1	1	1	1	1	1
7 - 8				7	4	6	1	1	1	3
8 - 9				7	4	6	6	3	5	5
9 - 10				7	3	5	9	1	5	5
10 - 11				7	9	8	11	14	13	10
11 - 12				12	16	14	4	10	7	11
- PM -										
12 - 1				15	9	12	4	12	8	10
1 - 2				6	12	9	11	8	10	9
2 - 3				9	18	14	9	8	9	11
3 - 4				22	21	22	13	17	15	18
4 - 5				22	13	18	11	14	13	15
5 - 6				22	11	17	17	9	13	15
6 - 7				17	18	18	6	5	6	12
7 - 8				14	4	9	14	8	11	10
8 - 9				8	12	10	7	9	8	9
9 - 10				8	8	8	8	5	7	7
10 - 11				5	8	7	3	3	3	5
11 - 12				0	3	2	2	2	2	2
TOTALS :				188	175	187	143	136	144	**163**
% Avg Day :				139%	107%	115%	88%	83%	88%	
AM (12am-10am) Peak Volumes										
15 Minute :				4	2	3	4	2	2	2
One Hour :				9	6	9	10	3	6	6
P.H.F. :				0.75	0.75	0.75	0.63	0.38	0.75	0.75
PH Begins :				7:45am	7:30am	7:45am	8:45am	2:45am	8:45am	7:30am
Mid (10am-2pm) Peak Volumes										
15 Minute :				10	8	6	5	8	6	5
One Hour :				20	17	17	12	19	15	13
P.H.F. :				0.50	0.53	0.71	0.60	0.59	0.63	0.81
PH Begins :				11:15am	10:30am	11:15am	10:15am	10:30am	10:15am	10:45am
PM (2pm-12am) Peak Volumes										
15 Minute :				8	10	7	7	7	5	5
One Hour :				27	23	22	17	17	17	19
P.H.F. :				0.84	0.64	0.92	0.61	0.61	0.85	0.95
PH Begins :				4:30pm	3:15pm	3:00pm	5:00pm	3:00pm	3:15pm	3:15pm

Lane #2 Weekly 24 Hour Volume Data 05/20/2013 to 05/26/2013

Time	05/20 MON	05/21 TUE	05/22 WED	05/23 THU	05/24 FRI	Weekday Average	05/25 SAT	05/26 SUN	Weekend Average	Week Average
- AM -										
12 - 1	0	1	0	3	0	1				1
1 - 2	0	2	1	1	1	1				1
2 - 3	0	0	0	0	1	0				0
3 - 4	0	1	2	2	2	1				1
4 - 5	0	0	2	0	1	1				1
5 - 6	0	0	0	0	0	0				0
6 - 7	2	5	1	0		2				2
7 - 8	6	3	6	4		5				5
8 - 9	5	3	6	6		5				5
9 - 10	5	12	3	5		6				6
10 - 11	5	3	5	4		4				4
11 - 12	11	6	3	12		8				8
- PM -										
12 - 1	10	3	15	11		10				10
1 - 2	10	7	9	7		8				8
2 - 3	8	22	12	11		13				13
3 - 4	19	21	21	24		21				21
4 - 5	20	7	16	11		14				14
5 - 6	8	19	12	6		11				11
6 - 7	16	12	13	15		14				14
7 - 8	9	9	16	17		13				13
8 - 9	14	9	8	11		11				11
9 - 10	12	7	9	7		9				9
10 - 11	8	2	4	2		4				4
11 - 12	4	1	3	3		3				3
TOTALS :	172	155	167	162	5	165				**165**
% Avg Day :	104%	94%	101%	98%	13%	100%				

AM (12am-10am) Peak Volumes

15 Minute :	5	6	4	4	2	3				3
One Hour :	11	12	8	9	2	8				8
P.H.F. :	0.69	0.50	0.50	0.56	0.25	0.67				0.67
PH Begins :	7:30am	9:00am	7:30am	7:45am	2:45am	7:30am				7:30am

Mid (10am-2pm) Peak Volumes

15 Minute :	6	3	6	5		4				4
One Hour :	13	7	15	16		12				12
P.H.F. :	0.65	0.58	0.63	0.80		0.75				0.75
PH Begins :	12:15pm	1:00pm	12:00pm	11:30am		11:45am				11:45am

PM (2pm-12am) Peak Volumes

15 Minute :	10	11	9	10		6				6
One Hour :	26	24	22	24		21				21
P.H.F. :	0.72	0.55	0.61	0.75		0.88				0.88
PH Begins :	3:30pm	5:30pm	2:30pm	3:00pm		3:00pm				3:00pm

Weekly 24 Hour Volume Report: 4TH BOISE BRDGE

Info Line 1 :
Info Line 2 :
GPS Lat/Lon :

Last Connected Device Type : Apollo
Serial Number :
Lanes : 2

Lane #1 Weekly 24 Hour Volume Data 05/13/2013 to 05/19/2013

Time	05/13 MON	05/14 TUE	05/15 WED	05/16 THU	05/17 FRI	Weekday Average	05/18 SAT	05/19 SUN	Weekend Average	Week Average
- AM -										
12 - 1					12	12	10	6	8	9
1 - 2					4	4	2	1	2	2
2 - 3					0	0	0	5	3	2
3 - 4					2	2	3	2	3	2
4 - 5				1	2	2	0	2	1	2
5 - 6				6	7	7	6	4	5	6
6 - 7				19	11	15	11	4	8	11
7 - 8				54	55	55	22	14	18	36
8 - 9				69	71	70	26	16	21	46
9 - 10				64	60	62	44	39	42	52
10 - 11				45	45	45	85	49	67	56
11 - 12				69	64	67	58	50	54	60
- PM -										
12 - 1				53	80	67	50	39	45	56
1 - 2				71	69	70	61	66	64	67
2 - 3				73	73	73	57	57	57	65
3 - 4				111	107	109	55	47	51	80
4 - 5				70	80	75	64	45	55	65
5 - 6				70	76	73	48	45	47	60
6 - 7				65	70	68	55	50	53	60
7 - 8				68	55	62	57	44	51	56
8 - 9				42	38	40	32	24	28	34
9 - 10				29	47	38	39	28	34	36
10 - 11				20	22	21	29	14	22	21
11 - 12				10	15	13	18	14	16	14
TOTALS :				1009	1065	1050	832	665	755	**898**
% Avg Day :				140%	119%	117%	93%	74%	84%	
AM (12am-10am) Peak Volumes										
15 Minute :				30	30	30	19	12	16	18
One Hour :				82	82	83	44	39	43	55
P.H.F. :				0.68	0.68	0.69	0.58	0.81	0.67	0.86
PH Begins :				7:45am	7:45am	7:45am	8:45am	9:00am	9:00am	8:45am
Mid (10am-2pm) Peak Volumes										
15 Minute :				22	26	22	29	20	23	17
One Hour :				71	82	72	94	66	78	67
P.H.F. :				0.81	0.79	0.82	0.81	0.83	0.85	0.99
PH Begins :				1:00pm	12:15pm	12:15pm	10:15am	1:00pm	10:15am	1:00pm
PM (2pm-12am) Peak Volumes										
15 Minute :				43	51	47	21	21	19	28
One Hour :				111	110	109	72	57	63	83
P.H.F. :				0.65	0.54	0.58	0.86	0.68	0.93	0.74
PH Begins :				3:00pm	2:30pm	3:00pm	3:30pm	2:00pm	3:30pm	3:15pm

Lane #1 Weekly 24 Hour Volume Data 05/20/2013 to 05/26/2013

Time	05/20 MON	05/21 TUE	05/22 WED	05/23 THU	05/24 FRI	Weekday Average	05/25 SAT	05/26 SUN	Weekend Average	Week Average
- AM -										
12 - 1	4	2	5	5	3	4				4
1 - 2	0	5	5	1	3	3				3
2 - 3	0	3	0	4	1	2				2
3 - 4	0	3	1	2	3	2				2
4 - 5	3	1	3	1	1	2				2
5 - 6	12	10	13	11	5	10				10
6 - 7	13	13	14	15		14				14
7 - 8	46	57	45	40		47				47
8 - 9	63	70	65	61		65				65
9 - 10	56	49	41	45		48				48
10 - 11	56	44	41	59		50				50
11 - 12	58	71	52	53		59				59
- PM -										
12 - 1	57	64	84	58		66				66
1 - 2	66	60	75	75		69				69
2 - 3	66	69	61	68		66				66
3 - 4	108	108	91	96		101				101
4 - 5	65	89	78	76		77				77
5 - 6	72	60	58	80		68				68
6 - 7	60	73	84	67		71				71
7 - 8	43	55	58	69		56				56
8 - 9	59	45	39	39		46				46
9 - 10	27	32	40	32		33				33
10 - 11	16	29	20	29		24				24
11 - 12	9	10	19	12		13				13
TOTALS :	959	1022	992	998	16	996				**996**
% Avg Day :	96%	103%	100%	100%	6%	100%				
				AM (12am-10am) Peak Volumes						
15 Minute :	28	30	27	26	2	28				28
One Hour :	75	83	80	71	5	78				78
P.H.F. :	0.67	0.69	0.74	0.68	0.63	0.70				0.70
PH Begins :	7:45am	7:45am	7:45am	7:45am	5:00am	7:45am				7:45am
				Mid (10am-2pm) Peak Volumes						
15 Minute :	26	22	29	22		22				22
One Hour :	66	73	86	75		70				70
P.H.F. :	0.63	0.83	0.74	0.85		0.80				0.80
PH Begins :	1:00pm	12:15pm	12:15pm	1:00pm		12:15pm				12:15pm
				PM (2pm-12am) Peak Volumes						
15 Minute :	56	47	38	45		47				47
One Hour :	119	114	93	97		104				104
P.H.F. :	0.53	0.61	0.61	0.54		0.55				0.55
PH Begins :	2:45pm	3:15pm	2:45pm	3:15pm		3:15pm				3:15pm

Lane #2 Weekly 24 Hour Volume Data 05/13/2013 to 05/19/2013

Time	05/13 MON	05/14 TUE	05/15 WED	05/16 THU	05/17 FRI	Weekday Average	05/18 SAT	05/19 SUN	Weekend Average	Week Average
- AM -										
12 - 1					6	6	12	8	10	9
1 - 2					3	3	3	5	4	4
2 - 3					3	3	0	8	4	4
3 - 4					4	4	2	4	3	3
4 - 5				0	1	1	2	2	2	2
5 - 6				3	6	5	3	3	3	4
6 - 7				6	5	6	5	4	5	5
7 - 8				39	44	42	13	11	12	27
8 - 9				43	68	56	28	8	18	37
9 - 10				48	51	50	34	20	27	38
10 - 11				28	46	37	66	39	53	45
11 - 12				45	49	47	52	37	45	46
- PM -										
12 - 1				69	78	74	83	63	73	73
1 - 2				90	60	75	69	54	62	68
2 - 3				73	93	83	66	62	64	74
3 - 4				103	81	92	61	49	55	74
4 - 5				72	100	86	62	60	61	74
5 - 6				78	106	92	62	58	60	76
6 - 7				67	77	72	59	52	56	64
7 - 8				70	77	74	55	43	49	61
8 - 9				61	52	57	46	37	42	49
9 - 10				43	56	50	50	29	40	45
10 - 11				26	46	36	31	23	27	32
11 - 12				14	23	19	21	20	21	20
TOTALS :				978	1135	1070	885	699	796	**934**
% Avg Day :				131%	122%	115%	95%	75%	85%	
AM (12am-10am) Peak Volumes										
15 Minute :				22	32	26	12	7	8	15
One Hour :				55	83	70	41	20	30	43
P.H.F. :				0.63	0.65	0.67	0.85	0.71	0.94	0.72
PH Begins :				7:15am	7:45am	7:45am	8:45am	9:00am	8:45am	7:45am
Mid (10am-2pm) Peak Volumes										
15 Minute :				28	29	27	26	26	26	22
One Hour :				90	80	84	83	67	75	78
P.H.F. :				0.80	0.69	0.78	0.80	0.64	0.72	0.89
PH Begins :				1:00pm	12:15pm	12:30pm	12:00pm	12:45pm	12:45pm	12:15pm
PM (2pm-12am) Peak Volumes										
15 Minute :				47	36	39	30	24	24	26
One Hour :				110	115	112	66	66	65	87
P.H.F. :				0.59	0.93	0.72	0.55	0.75	0.68	0.84
PH Begins :				3:15pm	2:30pm	2:30pm	2:00pm	5:15pm	2:00pm	2:30pm

Lane #2 Weekly 24 Hour Volume Data 05/20/2013 to 05/26/2013

Time	05/20 MON	05/21 TUE	05/22 WED	05/23 THU	05/24 FRI	Weekday Average	05/25 SAT	05/26 SUN	Weekend Average	Week Average
- AM -										
12 - 1	10	5	10	5	3	7				7
1 - 2	1	6	9	6	2	5				5
2 - 3	0	2	0	5	0	1				1
3 - 4	2	2	3	1	5	3				3
4 - 5	0	1	1	1	3	1				1
5 - 6	8	6	5	5	4	6				6
6 - 7	12	6	12	17		12				12
7 - 8	40	44	37	33		39				39
8 - 9	62	54	58	70		61				61
9 - 10	29	38	39	38		36				36
10 - 11	49	39	45	37		43				43
11 - 12	57	53	45	39		49				49
- PM -										
12 - 1	62	71	47	60		60				60
1 - 2	59	85	72	81		74				74
2 - 3	55	59	65	76		64				64
3 - 4	103	105	81	88		94				94
4 - 5	70	74	84	82		78				78
5 - 6	82	91	93	105		93				93
6 - 7	67	78	90	64		75				75
7 - 8	69	62	57	59		62				62
8 - 9	62	63	71	50		62				62
9 - 10	39	42	69	65		54				54
10 - 11	35	41	28	37		35				35
11 - 12	22	11	20	27		20				20
TOTALS :	995	1038	1041	1051	17	1034				**1034**
% Avg Day :	96%	100%	101%	102%	7%	100%				

AM (12am-10am) Peak Volumes										
15 Minute :	36	32	32	27	2	32				32
One Hour :	77	74	75	77	5	75				75
P.H.F. :	0.53	0.58	0.59	0.71	0.63	0.59				0.59
PH Begins :	7:45am	7:15am	7:30am	7:45am	2:45am	7:45am				7:45am
Mid (10am-2pm) Peak Volumes										
15 Minute :	21	25	22	26		21				21
One Hour :	67	85	72	81		75				75
P.H.F. :	0.80	0.85	0.82	0.78		0.89				0.89
PH Begins :	11:45am	1:00pm	1:00pm	1:00pm		1:00pm				1:00pm
PM (2pm-12am) Peak Volumes										
15 Minute :	36	39	35	31		35				35
One Hour :	103	105	93	105		96				96
P.H.F. :	0.72	0.67	0.78	0.85		0.69				0.69
PH Begins :	3:00pm	3:00pm	5:00pm	5:00pm		2:45pm				2:45pm

Weekly 24 Hour Volume Report: 600BLOCK E 4TH

Info Line 1 :
Info Line 2 :
GPS Lat/Lon :

Last Connected Device Type : Apollo
Serial Number : 90553
Lanes : 2

Lane #1 Weekly 24 Hour Volume Data 05/13/2013 to 05/19/2013

Time	05/13 MON	05/14 TUE	05/15 WED	05/16 THU	05/17 FRI	Weekday Average	05/18 SAT	05/19 SUN	Weekend Average	Week Average
- AM -										
12 - 1					3	3	2	2	2	2
1 - 2					0	0	0	1	1	0
2 - 3					0	0	1	0	1	0
3 - 4					4	4	2	1	2	2
4 - 5					2	2	1	3	2	2
5 - 6					6	6	3	5	4	5
6 - 7					19	19	10	10	10	13
7 - 8				69	60	65	14	6	10	37
8 - 9				57	52	55	25	18	22	38
9 - 10				55	46	51	48	37	43	47
10 - 11				38	45	42	59	54	57	49
11 - 12				63	58	61	62	43	53	57
- PM -										
12 - 1				58	66	62	54	57	56	59
1 - 2				61	41	51	40	43	42	46
2 - 3				45	60	53	51	93	72	62
3 - 4				80	72	76	40	51	46	61
4 - 5				77	73	75	46	42	44	60
5 - 6				59	85	72	66	54	60	66
6 - 7				50	71	61	49	37	43	52
7 - 8				39	49	44	41	37	39	42
8 - 9				49	47	48	35	23	29	39
9 - 10				20	23	22	26	30	28	25
10 - 11				13	19	16	27	15	21	19
11 - 12				4	7	6	13	1	7	6
TOTALS :				837	908	894	715	663	694	**789**
% Avg Day :				150%	115%	113%	91%	84%	88%	
				AM (12am-10am) Peak Volumes						
15 Minute :				25	31	28	16	14	15	17
One Hour :				77	78	77	48	37	43	48
P.H.F. :				0.77	0.63	0.69	0.75	0.66	0.72	0.71
PH Begins :				7:15am	7:30am	7:30am	9:00am	9:00am	9:00am	8:45am
				Mid (10am-2pm) Peak Volumes						
15 Minute :				24	21	20	21	22	19	17
One Hour :				66	66	65	73	61	64	61
P.H.F. :				0.83	0.79	0.81	0.87	0.69	0.84	0.90
PH Begins :				12:15pm	12:00pm	12:15pm	10:30am	12:15pm	10:30am	12:15pm
				PM (2pm-12am) Peak Volumes						
15 Minute :				33	30	31	20	55	35	24
One Hour :				89	85	84	72	93	73	72
P.H.F. :				0.67	0.71	0.68	0.90	0.42	0.52	0.75
PH Begins :				3:30pm	5:00pm	3:15pm	5:15pm	2:00pm	2:00pm	2:30pm

Lane #1 Weekly 24 Hour Volume Data 05/20/2013 to 05/26/2013

Time	05/20 MON	05/21 TUE	05/22 WED	05/23 THU	05/24 FRI	Weekday Average	05/25 SAT	05/26 SUN	Weekend Average	Week Average
- AM -										
12 - 1	5	4	6	2	4	4				4
1 - 2	0	0	2	1	0	1				1
2 - 3	0	3	2	2	4	2				2
3 - 4	2	2	3	0	0	1				1
4 - 5	4	5	5	4	1	4				4
5 - 6	9	9	7	4	8	7				7
6 - 7	21	19	17	21	2	19				19
7 - 8	68	57	66	60		63				63
8 - 9	47	50	60	76		58				58
9 - 10	40	58	44	42		46				46
10 - 11	45	49	50	42		47				47
11 - 12	61	48	47	49		51				51
- PM -										
12 - 1	52	58	66	58		59				59
1 - 2	72	53	52	54		58				58
2 - 3	59	53	46	58		54				54
3 - 4	79	74	72	88		78				78
4 - 5	75	72	67	80		74				74
5 - 6	71	64	53	65		63				63
6 - 7	62	59	56	62		60				60
7 - 8	46	48	67	65		57				57
8 - 9	55	28	45	36		41				41
9 - 10	30	23	27	37		29				29
10 - 11	20	12	22	15		17				17
11 - 12	5	8	4	7		6				6
TOTALS :	928	856	886	928	19	899				**899**
% Avg Day :	103%	95%	99%	103%	8%	100%				
				AM (12am-10am) Peak Volumes						
15 Minute :	31	22	28	29	3	28				28
One Hour :	80	72	78	82	8	75				75
P.H.F. :	0.65	0.82	0.70	0.71	0.67	0.67				0.67
PH Begins :	7:15am	7:15am	7:30am	7:45am	5:00am	7:15am				7:15am
				Mid (10am-2pm) Peak Volumes						
15 Minute :	25	23	17	19		19				19
One Hour :	72	67	66	64		64				64
P.H.F. :	0.72	0.73	0.97	0.84		0.84				0.84
PH Begins :	12:45pm	11:30am	11:45am	11:45am		11:45am				11:45am
				PM (2pm-12am) Peak Volumes						
15 Minute :	29	31	28	38		31				31
One Hour :	86	75	76	94		80				80
P.H.F. :	0.74	0.60	0.68	0.62		0.65				0.65
PH Begins :	2:30pm	3:30pm	3:30pm	2:30pm		2:30pm				2:30pm

Lane #2 Weekly 24 Hour Volume Data 05/13/2013 to 05/19/2013

Time	05/13 MON	05/14 TUE	05/15 WED	05/16 THU	05/17 FRI	Weekday Average	05/18 SAT	05/19 SUN	Weekend Average	Week Average
- AM -										
12 - 1					1	1	5	6	6	4
1 - 2					2	2	4	3	4	3
2 - 3					0	0	0	3	2	1
3 - 4					0	0	2	7	5	3
4 - 5					1	1	3	2	3	2
5 - 6					2	2	1	1	1	1
6 - 7					7	7	6	7	7	7
7 - 8				41	47	44	11	6	9	26
8 - 9				66	54	60	18	17	18	39
9 - 10				43	47	45	53	22	38	41
10 - 11				42	29	36	43	53	48	42
11 - 12				47	43	45	46	61	54	49
- PM -										
12 - 1				62	70	66	53	50	52	59
1 - 2				66	54	60	44	48	46	53
2 - 3				58	62	60	58	48	53	57
3 - 4				102	95	99	57	52	55	77
4 - 5				68	83	76	52	60	56	66
5 - 6				65	91	78	46	39	43	60
6 - 7				74	68	71	55	41	48	60
7 - 8				73	52	63	36	36	36	49
8 - 9				44	53	49	41	29	35	42
9 - 10				40	56	48	42	40	41	45
10 - 11				21	14	18	27	22	25	21
11 - 12				9	16	13	9	6	8	10
TOTALS :				921	947	944	712	659	693	**817**
% Avg Day :				159%	116%	116%	87%	81%	85%	
AM (12am-10am) Peak Volumes										
15 Minute :				21	29	23	22	9	16	15
One Hour :				68	76	74	53	25	39	45
P.H.F. :				0.81	0.66	0.80	0.60	0.69	0.61	0.75
PH Begins :				7:30am	7:30am	7:30am	9:00am	8:45am	8:45am	8:45am
Mid (10am-2pm) Peak Volumes										
15 Minute :				20	19	19	19	25	18	18
One Hour :				73	70	70	57	78	65	62
P.H.F. :				0.91	0.92	0.92	0.75	0.78	0.90	0.86
PH Begins :				12:45pm	12:00pm	12:15pm	11:45am	10:30am	10:30am	12:15pm
PM (2pm-12am) Peak Volumes										
15 Minute :				30	43	34	17	19	16	25
One Hour :				108	106	108	61	63	57	81
P.H.F. :				0.90	0.62	0.79	0.90	0.83	0.89	0.81
PH Begins :				3:15pm	3:15pm	3:15pm	2:15pm	3:45pm	3:45pm	3:15pm

Lane #2 Weekly 24 Hour Volume Data 05/20/2013 to 05/26/2013

Time	05/20 MON	05/21 TUE	05/22 WED	05/23 THU	05/24 FRI	Weekday Average	05/25 SAT	05/26 SUN	Weekend Average	Week Average
- AM -										
12 - 1	3	3	4	2	2	3				3
1 - 2	0	0	1	1	1	1				1
2 - 3	0	2	0	1	0	1				1
3 - 4	2	0	1	0	0	1				1
4 - 5	1	2	1	2	1	1				1
5 - 6	5	2	4	4	4	4				4
6 - 7	6	5	11	7	0	7				7
7 - 8	47	44	44	49		46				46
8 - 9	39	54	49	52		49				49
9 - 10	35	36	31	39		35				35
10 - 11	29	36	38	40		36				36
11 - 12	57	72	47	46		56				56
- PM -										
12 - 1	48	64	71	58		60				60
1 - 2	63	50	59	59		58				58
2 - 3	63	68	66	61		65				65
3 - 4	80	88	84	95		87				87
4 - 5	90	76	70	80		79				79
5 - 6	82	81	78	74		79				79
6 - 7	65	62	74	65		67				67
7 - 8	67	56	67	50		60				60
8 - 9	51	50	54	46		50				50
9 - 10	57	32	46	59		49				49
10 - 11	20	20	15	29		21				21
11 - 12	10	9	8	7		9				9
TOTALS :	920	912	923	926	8	924				**924**
% Avg Day :	100%	99%	100%	100%	3%	100%				
AM (12am-10am) Peak Volumes										
15 Minute :	22	21	24	31	2	24				24
One Hour :	67	65	68	72	4	68				68
P.H.F. :	0.76	0.77	0.71	0.58	0.50	0.71				0.71
PH Begins :	7:30am	7:45am	7:30am	7:30am	5:00am	7:30am				7:30am
Mid (10am-2pm) Peak Volumes										
15 Minute :	18	22	24	20		19				19
One Hour :	63	78	83	63		66				66
P.H.F. :	0.88	0.89	0.86	0.93		0.87				0.87
PH Begins :	1:00pm	11:30am	12:15pm	12:15pm		12:15pm				12:15pm
PM (2pm-12am) Peak Volumes										
15 Minute :	37	35	35	29		31				31
One Hour :	102	107	101	102		103				103
P.H.F. :	0.69	0.76	0.72	0.88		0.83				0.83
PH Begins :	3:15pm	3:15pm	3:15pm	3:15pm		3:15pm				3:15pm

Weekly 24 Hour Volume Report: 12 BOISE BRDGE

Info Line 1 :
Info Line 2 :
GPS Lat/Lon :

Last Connected Device Type : Apollo
Serial Number : 90551
Lanes : 2

Lane #1 Weekly 24 Hour Volume Data 05/06/2013 to 05/12/2013

Time	05/06 MON	05/07 TUE	05/08 WED	05/09 THU	05/10 FRI	Weekday Average	05/11 SAT	05/12 SUN	Weekend Average	Week Average
12 - 1							15	10	13	13
1 - 2							1	9	5	5
2 - 3					0	0	4	7	6	4
3 - 4					2	2	4	7	6	4
4 - 5					4	4	3	22	13	10
5 - 6					33	33	12	6	9	17
6 - 7					87	87	43	6	25	45
7 - 8					254	254	42	30	36	109
8 - 9					146	146	108	45	77	100
9 - 10					113	113	131	67	99	104
10 - 11					119	119	128	110	119	119
11 - 12					216	216	127	106	117	150
12 - 1					162	162	150	121	136	144
1 - 2					155	155	123	126	125	135
2 - 3					214	214	106	96	101	139
3 - 4					325	325	125	95	110	182
4 - 5					176	176	81	85	83	114
5 - 6					213	213	128	101	115	147
6 - 7					246	246	129	94	112	156
7 - 8					190	190	90	71	81	117
8 - 9					381	381	93	47	70	174
9 - 10					123	123	100	53	77	92
10 - 11					55	55	69	18	44	47
11 - 12					21	21	55	7	31	28
TOTALS :					3235	3235	1867	1339	1610	**2155**
% Avg Day :					164%	164%	87%	62%	75%	

AM (12am-10am) Peak Volumes

15 Minute :	106	106	39	20	30	40
One Hour :	267	267	131	67	100	121
P.H.F. :	0.63	0.63	0.84	0.84	0.83	0.76
PH Begins :	7:15am	7:15am	9:00am	9:00am	9:00am	7:15am

Mid (10am-2pm) Peak Volumes

15 Minute :	120	120	45	44	42	61
One Hour :	256	256	157	134	138	177
P.H.F. :	0.53	0.53	0.87	0.76	0.82	0.73
PH Begins :	11:30am	11:30am	11:45am	12:45pm	11:15am	11:30am

PM (2pm-12am) Peak Volumes

15 Minute :	173	173	39	38	33	76
One Hour :	417	417	140	110	116	208
P.H.F. :	0.60	0.60	0.90	0.72	0.91	0.68
PH Begins :	2:30pm	2:30pm	5:45pm	3:15pm	3:15pm	2:30pm

Lane #1 Weekly 24 Hour Volume Data 05/13/2013 to 05/19/2013

Time	05/13 MON	05/14 TUE	05/15 WED	05/16 THU	05/17 FRI	Weekday Average	05/18 SAT	05/19 SUN	Weekend Average	Week Average
12 - 1	5	4	17	17		11				11
1 - 2	0	3	19	0		6				6
2 - 3	0	6	13			6				6
3 - 4	4	6	9			6				6
4 - 5	17	8	14			13				13
5 - 6	29	26	43			33				33
6 - 7	71	61	118			83				83
7 - 8	235	235	257			242				242
8 - 9	110	113	157			127				127
9 - 10	105	112	118			112				112
10 - 11	99	112	97			103				103
11 - 12	169	169	125			154				154
12 - 1	143	136	225			168				168
1 - 2	148	161	145			151				151
2 - 3	182	180	203			188				188
3 - 4	324	320	310			318				318
4 - 5	136	167	158			154				154
5 - 6	116	177	116			136				136
6 - 7	110	167	161			146				146
7 - 8	108	113	72			98				98
8 - 9	99	172	154			142				142
9 - 10	53	94	97			81				81
10 - 11	22	75	34			44				44
11 - 12	15	44	4			21				21
TOTALS :	2300	2661	2666	17		2543				**2543**
% Avg Day :	90%	105%	105%	11%		100%				

AM (12am-10am) Peak Volumes

15 Minute :	110	87	101	6		93				93
One Hour :	235	245	273	17		250				250
P.H.F. :	0.53	0.70	0.68	0.71		0.67				0.67
PH Begins :	7:00am	7:15am	7:15am	12:00am		7:15am				7:15am

Mid (10am-2pm) Peak Volumes

15 Minute :	85	74	79			69				69
One Hour :	228	193	230			211				211
P.H.F. :	0.67	0.65	0.73			0.76				0.76
PH Begins :	11:30am	11:15am	11:45am			11:30am				11:30am

PM (2pm-12am) Peak Volumes

15 Minute :	158	164	124			149				149
One Hour :	410	390	368			389				389
P.H.F. :	0.65	0.59	0.74			0.65				0.65
PH Begins :	2:45pm	2:45pm	2:45pm			2:45pm				2:45pm

Lane #2 Weekly 24 Hour Volume Data 05/06/2013 to 05/12/2013

Time	05/06 MON	05/07 TUE	05/08 WED	05/09 THU	05/10 FRI	Weekday Average	05/11 SAT	05/12 SUN	Weekend Average	Week Average
12 - 1							26	8	17	17
1 - 2							12	5	9	9
2 - 3					2	2	10	6	8	6
3 - 4					2	2	10	8	9	7
4 - 5					5	5	1	14	8	7
5 - 6					13	13	8	5	7	9
6 - 7					68	68	30	5	18	34
7 - 8					257	257	39	22	31	106
8 - 9					127	127	73	34	54	78
9 - 10					105	105	146	61	104	104
10 - 11					90	90	126	106	116	107
11 - 12					149	149	123	78	101	117
12 - 1					198	198	148	116	132	154
1 - 2					141	141	132	123	128	132
2 - 3					198	198	113	116	115	142
3 - 4					267	267	143	85	114	165
4 - 5					228	228	102	98	100	143
5 - 6					252	252	151	97	124	167
6 - 7					265	265	116	91	104	157
7 - 8					169	169	120	69	95	119
8 - 9					233	233	111	77	94	140
9 - 10					110	110	99	54	77	88
10 - 11					63	63	81	31	56	58
11 - 12					26	26	47	12	30	28
TOTALS :					2968	2968	1967	1321	1651	**2094**
% Avg Day :					155%	155%	94%	63%	79%	
AM (12am-10am) Peak Volumes										
15 Minute :					108	108	39	23	31	42
One Hour :					257	257	146	61	104	112
P.H.F. :					0.59	0.59	0.94	0.66	0.84	0.67
PH Begins :					7:00am	7:00am	9:00am	9:00am	9:00am	7:15am
Mid (10am-2pm) Peak Volumes										
15 Minute :					72	72	45	39	38	46
One Hour :					232	232	150	131	138	157
P.H.F. :					0.81	0.81	0.83	0.84	0.91	0.85
PH Begins :					11:45am	11:45am	12:15pm	12:45pm	12:45pm	11:30am
PM (2pm-12am) Peak Volumes										
15 Minute :					91	91	47	39	36	47
One Hour :					296	296	152	116	126	172
P.H.F. :					0.86	0.86	0.93	0.85	0.93	0.91
PH Begins :					2:45pm	2:45pm	5:15pm	2:00pm	5:15pm	2:45pm

Lane #2 Weekly 24 Hour Volume Data 05/13/2013 to 05/19/2013

Time	05/13 MON	05/14 TUE	05/15 WED	05/16 THU	05/17 FRI	Weekday Average	05/18 SAT	05/19 SUN	Weekend Average	Week Average
12 - 1	9	6	19	15		12				12
1 - 2	3	4	20	2		8				8
2 - 3	0	3	4			2				2
3 - 4	3	5	5			4				4
4 - 5	6	1	11			6				6
5 - 6	7	13	17			12				12
6 - 7	35	29	58			41				41
7 - 8	219	258	265			247				247
8 - 9	110	95	169			125				125
9 - 10	76	97	107			93				93
10 - 11	88	115	82			95				95
11 - 12	129	118	116			121				121
12 - 1	172	188	211			190				190
1 - 2	128	148	145			140				140
2 - 3	145	161	158			155				155
3 - 4	221	186	204			204				204
4 - 5	147	161	154			154				154
5 - 6	165	204	148			172				172
6 - 7	126	208	179			171				171
7 - 8	130	121	154			135				135
8 - 9	97	129	119			115				115
9 - 10	68	128	85			94				94
10 - 11	30	132	37			66				66
11 - 12	16	46	10			24				24
TOTALS :	2130	2556	2477	17		2386				**2386**
% Avg Day :	89%	107%	104%	11%		100%				

AM (12am-10am) Peak Volumes

15 Minute :	101	94	88	5	94	94
One Hour :	219	262	269	15	247	247
P.H.F. :	0.54	0.70	0.76	0.75	0.66	0.66
PH Begins :	7:00am	7:15am	7:15am	12:00am	7:00am	7:00am

Mid (10am-2pm) Peak Volumes

15 Minute :	74	56	71		59	59
One Hour :	202	188	211		195	195
P.H.F. :	0.68	0.84	0.74		0.83	0.83
PH Begins :	11:30am	12:00pm	12:00pm		11:45am	11:45am

PM (2pm-12am) Peak Volumes

15 Minute :	83	72	75		77	77
One Hour :	249	223	228		232	232
P.H.F. :	0.75	0.77	0.76		0.75	0.75
PH Begins :	2:45pm	2:30pm	2:45pm		2:45pm	2:45pm

Weekly 24 Hour Volume Report: 12 GEMSTNE BRDG

Info Line 1 :
Info Line 2 :
GPS Lat/Lon :

Last Connected Device Type : Apollo
Serial Number :
Lanes : 2

Lane #1 Weekly 24 Hour Volume Data 05/06/2013 to 05/12/2013

Time	05/06 MON	05/07 TUE	05/08 WED	05/09 THU	05/10 FRI	Weekday Average	05/11 SAT	05/12 SUN	Weekend Average	Week Average
12 - 1							7	4	6	6
1 - 2							3	0	2	2
2 - 3					0	0	0	1	1	0
3 - 4					0	0	1	0	1	0
4 - 5					1	1	1	0	1	1
5 - 6					2	2	0	0	0	1
6 - 7					7	7	3	4	4	5
7 - 8					25	25	8	7	8	13
8 - 9					46	46	17	7	12	23
9 - 10					105	105	32	24	28	54
10 - 11					41	41	28	32	30	34
11 - 12					28	28	33	35	34	32
12 - 1					52	52	36	30	33	39
1 - 2					41	41	31	34	33	35
2 - 3					35	35	20	21	21	25
3 - 4					65	65	26	26	26	39
4 - 5					77	77	24	24	24	42
5 - 6					43	43	34	32	33	36
6 - 7					43	43	27	34	31	35
7 - 8					35	35	19	22	21	25
8 - 9					33	33	35	27	31	32
9 - 10					25	25	25	22	24	24
10 - 11					16	16	20	9	15	15
11 - 12					7	7	13	4	9	8
TOTALS :					727	727	443	399	428	**526**
% Avg Day :					156%	151%	84%	76%	81%	
AM (12am-10am) Peak Volumes										
15 Minute :					45	45	10	9	10	20
One Hour :					111	111	32	24	29	54
P.H.F. :					0.62	0.62	0.80	0.67	0.73	0.68
PH Begins :					8:45am	8:45am	9:00am	9:00am	9:00am	8:45am
Mid (10am-2pm) Peak Volumes										
15 Minute :					20	20	13	15	12	14
One Hour :					58	58	40	39	38	44
P.H.F. :					0.73	0.73	0.77	0.65	0.79	0.79
PH Begins :					12:15pm	12:15pm	11:45am	12:15pm	12:15pm	12:15pm
PM (2pm-12am) Peak Volumes										
15 Minute :					43	43	13	13	13	17
One Hour :					95	95	35	41	35	48
P.H.F. :					0.55	0.55	0.67	0.79	0.67	0.71
PH Begins :					3:15pm	3:15pm	8:00pm	5:30pm	5:15pm	3:30pm

Lane #1 Weekly 24 Hour Volume Data 05/13/2013 to 05/19/2013

Time	05/13 MON	05/14 TUE	05/15 WED	05/16 THU	05/17 FRI	Weekday Average	05/18 SAT	05/19 SUN	Weekend Average	Week Average
12 - 1	3	2	5	6		4				4
1 - 2	0	3	2	1		2				2
2 - 3	0	1	1			1				1
3 - 4	1	0	0			0				0
4 - 5	0	1	2			1				1
5 - 6	2	1	2			2				2
6 - 7	12	12	7			10				10
7 - 8	28	24	31			28				28
8 - 9	45	36	65			49				49
9 - 10	123	116	123			121				121
10 - 11	35	37	36			36				36
11 - 12	33	33	35			34				34
12 - 1	53	56	66			58				58
1 - 2	40	45	29			38				38
2 - 3	25	42	42			36				36
3 - 4	55	60	42			52				52
4 - 5	93	86	92			90				90
5 - 6	37	32	50			40				40
6 - 7	35	51	59			48				48
7 - 8	24	39	46			36				36
8 - 9	24	24	28			25				25
9 - 10	16	25	17			19				19
10 - 11	8	22	5			12				12
11 - 12	1	4	4			3				3
TOTALS :	693	752	789	7		745				**745**
% Avg Day :	93%	101%	106%	15%		100%				

AM (12am-10am) Peak Volumes										
15 Minute :	50	51	56	3		50				50
One Hour :	133	117	136	6		129				129
P.H.F. :	0.67	0.57	0.61	0.50		0.65				0.65
PH Begins :	8:45am	8:45am	8:30am	12:00am		8:45am				8:45am
Mid (10am-2pm) Peak Volumes										
15 Minute :	21	21	24			22				22
One Hour :	53	57	66			58				58
P.H.F. :	0.63	0.68	0.69			0.66				0.66
PH Begins :	12:00pm	12:15pm	12:00pm			12:00pm				12:00pm
PM (2pm-12am) Peak Volumes										
15 Minute :	52	48	57			52				52
One Hour :	99	98	106			100				100
P.H.F. :	0.48	0.51	0.46			0.48				0.48
PH Begins :	3:30pm	3:45pm	3:30pm			3:30pm				3:30pm

Lane #2 Weekly 24 Hour Volume Data 05/06/2013 to 05/12/2013

Time	05/06 MON	05/07 TUE	05/08 WED	05/09 THU	05/10 FRI	Weekday Average	05/11 SAT	05/12 SUN	Weekend Average	Week Average
12 - 1							4	3	4	4
1 - 2							6	2	4	4
2 - 3					0	0	0	2	1	1
3 - 4					0	0	1	2	2	1
4 - 5					3	3	0	1	1	1
5 - 6					3	3	2	4	3	3
6 - 7					9	9	1	0	1	3
7 - 8					15	15	5	1	3	7
8 - 9					53	53	13	14	14	27
9 - 10					74	74	27	16	22	39
10 - 11					21	21	33	20	27	25
11 - 12					37	37	33	31	32	34
12 - 1					52	52	38	36	37	42
1 - 2					45	45	43	38	41	42
2 - 3					35	35	32	29	31	32
3 - 4					87	87	30	31	31	49
4 - 5					43	43	47	27	37	39
5 - 6					52	52	36	40	38	43
6 - 7					41	41	38	36	37	38
7 - 8					48	48	25	32	29	35
8 - 9					54	54	36	38	37	43
9 - 10					25	25	26	18	22	23
10 - 11					16	16	19	13	16	16
11 - 12					16	16	20	5	13	14
TOTALS :					729	729	515	439	483	**565**
% Avg Day :					146%	141%	91%	78%	85%	
AM (12am-10am) Peak Volumes										
15 Minute :					32	32	9	7	8	14
One Hour :					89	89	27	16	23	41
P.H.F. :					0.70	0.70	0.75	0.57	0.72	0.73
PH Begins :					8:45am	8:45am	9:00am	9:00am	9:00am	8:45am
Mid (10am-2pm) Peak Volumes										
15 Minute :					19	19	13	14	13	12
One Hour :					55	55	43	41	42	44
P.H.F. :					0.76	0.76	0.83	0.73	0.81	0.92
PH Begins :					12:45pm	12:45pm	1:00pm	12:30pm	1:00pm	12:30pm
PM (2pm-12am) Peak Volumes										
15 Minute :					33	33	18	16	12	17
One Hour :					93	93	50	42	41	55
P.H.F. :					0.70	0.70	0.69	0.66	0.85	0.81
PH Begins :					3:15pm	3:15pm	3:45pm	5:30pm	5:30pm	3:15pm

Lane #2 Weekly 24 Hour Volume Data 05/13/2013 to 05/19/2013

Time	05/13 MON	05/14 TUE	05/15 WED	05/16 THU	05/17 FRI	Weekday Average	05/18 SAT	05/19 SUN	Weekend Average	Week Average
12 - 1	6	4	2	2		4				4
1 - 2	2	2	4	2		3				3
2 - 3	0	1	2			1				1
3 - 4	1	0	1			1				1
4 - 5	1	0	1			1				1
5 - 6	3	2	1			2				2
6 - 7	8	7	6			7				7
7 - 8	18	16	17			17				17
8 - 9	60	48	53			54				54
9 - 10	67	72	70			70				70
10 - 11	28	20	27			25				25
11 - 12	31	39	33			34				34
12 - 1	50	56	56			54				54
1 - 2	40	44	33			39				39
2 - 3	33	33	40			35				35
3 - 4	78	73	74			75				75
4 - 5	42	60	54			52				52
5 - 6	59	58	62			60				60
6 - 7	30	62	47			46				46
7 - 8	33	47	52			44				44
8 - 9	33	36	41			37				37
9 - 10	28	33	38			33				33
10 - 11	7	15	17			13				13
11 - 12	4	7	5			5				5
TOTALS :	662	735	736	4		712				**712**
% Avg Day :	93%	103%	103%	9%		100%				

AM (12am-10am) Peak Volumes

15 Minute :	37	33	28	1	31	31
One Hour :	89	85	79	3	83	83
P.H.F. :	0.60	0.64	0.71	0.75	0.67	0.67
PH Begins :	8:30am	8:30am	8:45am	0:30am	8:30am	8:30am

Mid (10am-2pm) Peak Volumes

15 Minute :	16	21	16		17	17
One Hour :	50	56	56		54	54
P.H.F. :	0.78	0.67	0.88		0.79	0.79
PH Begins :	12:00pm	12:00pm	12:00pm		12:00pm	12:00pm

PM (2pm-12am) Peak Volumes

15 Minute :	28	30	30		29	29
One Hour :	86	83	88		84	84
P.H.F. :	0.77	0.69	0.73		0.72	0.72
PH Begins :	3:15pm	3:30pm	3:15pm		3:15pm	3:15pm

Weekly 24 Hour Volume Report: HIWAY 52 SHELL

Info Line 1 :
Info Line 2 :
GPS Lat/Lon :

Last Connected Device Type : Apollo
Serial Number : 90552
Lanes : 2

Lane #1 Weekly 24 Hour Volume Data 05/13/2013 to 05/19/2013

Time	05/13 MON	05/14 TUE	05/15 WED	05/16 THU	05/17 FRI	Weekday Average	05/18 SAT	05/19 SUN	Weekend Average	Week Average
- AM -										
12 - 1					15	15	27	33	30	25
1 - 2					7	7	11	17	14	12
2 - 3					14	14	15	13	14	14
3 - 4					27	27	8	4	6	13
4 - 5				8	33	33	16	13	15	22
5 - 6				94	83	89	33	14	24	56
6 - 7				201	170	186	80	50	65	125
7 - 8				252	220	236	123	75	99	168
8 - 9				227	268	248	202	130	166	207
9 - 10				288	306	297	282	179	231	264
10 - 11				280	318	299	345	258	302	300
11 - 12				367	383	375	417	280	349	362
- PM -										
12 - 1				381	417	399	454	348	401	400
1 - 2				388	384	386	382	368	375	381
2 - 3				361	349	355	405	284	345	350
3 - 4				356	382	369	361	265	313	341
4 - 5				349	425	387	329	247	288	338
5 - 6				358	353	356	321	222	272	314
6 - 7				290	289	290	268	200	234	262
7 - 8				251	229	240	172	175	174	207
8 - 9				194	189	192	205	157	181	186
9 - 10				121	176	149	204	124	164	156
10 - 11				65	108	87	115	59	87	87
11 - 12				20	56	38	52	22	37	38
TOTALS :				4851	5201	5074	4827	3537	4186	**4628**
% Avg Day :				131%	112%	110%	104%	76%	90%	
AM (12am-10am) Peak Volumes										
15 Minute :				79	95	86	85	47	66	68
One Hour :				292	325	309	282	179	231	264
P.H.F. :				0.92	0.86	0.90	0.83	0.95	0.88	0.97
PH Begins :				8:45am	8:45am	8:45am	9:00am	9:00am	9:00am	9:00am
Mid (10am-2pm) Peak Volumes										
15 Minute :				116	115	110	130	100	105	105
One Hour :				411	422	410	461	368	402	401
P.H.F. :				0.89	0.92	0.93	0.89	0.92	0.96	0.95
PH Begins :				11:30am	11:45am	11:30am	11:30am	1:00pm	12:00pm	12:00pm
PM (2pm-12am) Peak Volumes										
15 Minute :				100	137	109	122	76	93	93
One Hour :				376	432	388	433	284	354	360
P.H.F. :				0.94	0.79	0.89	0.89	0.93	0.95	0.97
PH Begins :				2:30pm	4:15pm	4:15pm	2:15pm	2:00pm	2:15pm	2:30pm

Lane #1 Weekly 24 Hour Volume Data 05/20/2013 to 05/26/2013

Time	05/20 MON	05/21 TUE	05/22 WED	05/23 THU	05/24 FRI	Weekday Average	05/25 SAT	05/26 SUN	Weekend Average	Week Average
- AM -										
12 - 1	26	8	13	10	14	14				14
1 - 2	3	8	9	10	19	10				10
2 - 3	10	10	9	22	20	14				14
3 - 4	26	27	22	26	18	24				24
4 - 5	30	32	35	16	18	29				29
5 - 6	90	88	88	91		89				89
6 - 7	172	186	155	190		176				176
7 - 8	234	238	240	216		232				232
8 - 9	262	251	233	253		250				250
9 - 10	289	287	291	274		285				285
10 - 11	300	336	289	299		306				306
11 - 12	322	361	357	336		344				344
- PM -										
12 - 1	404	413	418	406		410				410
1 - 2	356	402	377	366		375				375
2 - 3	347	339	364	363		353				353
3 - 4	379	364	381	362		372				372
4 - 5	368	347	345	347		352				352
5 - 6	314	370	377	353		354				354
6 - 7	229	260	267	323		270				270
7 - 8	228	240	258	245		243				243
8 - 9	167	168	210	225		193				193
9 - 10	155	135	153	178		155				155
10 - 11	77	63	70	80		73				73
11 - 12	26	32	28	30		29				29
TOTALS :	4814	4965	4989	5021	89	4952				**4952**
% Avg Day :	97%	100%	101%	101%	10%	100%				
AM (12am-10am) Peak Volumes										
15 Minute :	81	82	91	80	13	76				76
One Hour :	293	287	306	281	30	289				289
P.H.F. :	0.90	0.88	0.84	0.88	0.75	0.95				0.95
PH Begins :	8:45am	9:00am	8:45am	8:45am	3:30am	8:45am				8:45am
Mid (10am-2pm) Peak Volumes										
15 Minute :	116	120	125	113		113				113
One Hour :	404	421	418	406		411				411
P.H.F. :	0.87	0.88	0.84	0.90		0.91				0.91
PH Begins :	11:45am	11:45am	11:45am	12:00pm		12:00pm				12:00pm
PM (2pm-12am) Peak Volumes										
15 Minute :	106	109	114	107		102				102
One Hour :	402	390	385	370		371				371
P.H.F. :	0.95	0.89	0.84	0.86		0.91				0.91
PH Begins :	3:45pm	4:45pm	4:30pm	3:45pm		3:00pm				3:00pm

Lane #2 Weekly 24 Hour Volume Data 05/13/2013 to 05/19/2013

Time	05/13 MON	05/14 TUE	05/15 WED	05/16 THU	05/17 FRI	Weekday Average	05/18 SAT	05/19 SUN	Weekend Average	Week Average
- AM -										
12 - 1					39	39	49	58	54	49
1 - 2					20	20	35	36	36	30
2 - 3					13	13	9	25	17	16
3 - 4					11	11	14	17	16	14
4 - 5				3	21	19	13	16	15	16
5 - 6				39	38	39	30	26	28	33
6 - 7				101	77	89	57	36	47	68
7 - 8				208	221	215	123	65	94	154
8 - 9				307	306	307	247	142	195	251
9 - 10				265	339	302	341	184	263	282
10 - 11				325	361	343	382	269	326	334
11 - 12				377	440	409	482	261	372	390
- PM -										
12 - 1				468	486	477	510	359	435	456
1 - 2				462	502	482	503	371	437	460
2 - 3				427	393	410	419	319	369	390
3 - 4				441	471	456	351	309	330	393
4 - 5				427	525	476	352	301	327	401
5 - 6				517	567	542	446	364	405	474
6 - 7				443	485	464	402	278	340	402
7 - 8				360	373	367	310	199	255	311
8 - 9				266	280	273	249	180	215	244
9 - 10				195	257	226	184	161	173	199
10 - 11				113	157	135	190	126	158	147
11 - 12				46	88	67	97	35	66	67
TOTALS :				5790	6470	6181	5795	4137	4973	**5581**
% Avg Day :				129%	116%	111%	104%	74%	89%	
AM (12am-10am) Peak Volumes										
15 Minute :				80	91	85	94	52	70	76
One Hour :				307	339	307	341	192	264	282
P.H.F. :				0.96	0.93	0.97	0.91	0.92	0.94	0.93
PH Begins :				8:00am	9:00am	8:00am	9:00am	8:45am	9:00am	9:00am
Mid (10am-2pm) Peak Volumes										
15 Minute :				142	134	132	143	105	118	122
One Hour :				492	502	485	511	376	444	463
P.H.F. :				0.87	0.94	0.92	0.94	0.90	0.94	0.95
PH Begins :				12:15pm	1:00pm	12:45pm	11:30am	12:15pm	12:15pm	12:15pm
PM (2pm-12am) Peak Volumes										
15 Minute :				153	166	160	121	117	112	136
One Hour :				525	567	544	446	364	405	474
P.H.F. :				0.86	0.85	0.85	0.94	0.78	0.90	0.87
PH Begins :				5:15pm	5:00pm	5:15pm	5:00pm	5:00pm	5:00pm	5:00pm

Lane #2 Weekly 24 Hour Volume Data 05/20/2013 to 05/26/2013

Time	05/20 MON	05/21 TUE	05/22 WED	05/23 THU	05/24 FRI	Weekday Average	05/25 SAT	05/26 SUN	Weekend Average	Week Average
- AM -										
12 - 1	26	30	53	37	50	39				39
1 - 2	18	17	7	14	18	15				15
2 - 3	8	10	6	20	16	12				12
3 - 4	15	13	17	16	18	16				16
4 - 5	15	14	10	7	6	12				12
5 - 6	41	34	30	24		32				32
6 - 7	74	102	85	87		87				87
7 - 8	199	180	189	220		197				197
8 - 9	258	319	253	320		288				288
9 - 10	298	329	317	282		307				307
10 - 11	353	324	319	325		330				330
11 - 12	368	415	371	365		380				380
- PM -										
12 - 1	507	562	489	512		518				518
1 - 2	415	499	448	445		452				452
2 - 3	461	412	413	428		429				429
3 - 4	412	434	432	457		434				434
4 - 5	518	439	485	485		482				482
5 - 6	482	515	490	492		495				495
6 - 7	422	463	419	485		447				447
7 - 8	302	345	342	355		336				336
8 - 9	224	234	248	290		249				249
9 - 10	193	180	203	220		199				199
10 - 11	153	109	131	125		130				130
11 - 12	42	54	64	54		54				54
TOTALS :	5804	6033	5821	6065	108	5940				**5940**
% Avg Day :	98%	102%	98%	102%	10%	100%				
				AM (12am-10am) Peak Volumes						
15 Minute :	83	96	86	94	17	80				80
One Hour :	298	350	317	321	50	308				308
P.H.F. :	0.93	0.91	0.92	0.85	0.74	0.96				0.96
PH Begins :	9:00am	8:45am	9:00am	7:45am	12:00am	8:45am				8:45am
				Mid (10am-2pm) Peak Volumes						
15 Minute :	139	159	138	142		139				139
One Hour :	507	573	489	529		518				518
P.H.F. :	0.91	0.90	0.89	0.93		0.93				0.93
PH Begins :	12:00pm	12:15pm	12:00pm	12:15pm		12:00pm				12:00pm
				PM (2pm-12am) Peak Volumes						
15 Minute :	157	151	136	135		132				132
One Hour :	550	515	499	504		510				510
P.H.F. :	0.88	0.85	0.92	0.93		0.97				0.97
PH Begins :	4:15pm	5:00pm	4:45pm	4:45pm		4:45pm				4:45pm

Weekly 24 Hour Volume Report: JOHNS AT DEWEY

Info Line 1 :
Info Line 2 :
GPS Lat/Lon :

Last Connected Device Type : Apollo
Serial Number : 89892
Lanes : 2

Lane #1 Weekly 24 Hour Volume Data 05/13/2013 to 05/19/2013

Time	05/13 MON	05/14 TUE	05/15 WED	05/16 THU	05/17 FRI	Weekday Average	05/18 SAT	05/19 SUN	Weekend Average	Week Average
- AM -										
12 - 1					7	7	3	3	3	4
1 - 2					2	2	1	5	3	3
2 - 3					2	2	1	1	1	1
3 - 4					1	1	6	1	4	3
4 - 5					2	2	2	2	2	2
5 - 6				9	9	10	8	6	7	9
6 - 7				12	20	16	7	10	9	12
7 - 8				44	36	40	22	12	17	29
8 - 9				43	51	47	53	21	37	42
9 - 10				59	46	53	61	21	41	47
10 - 11				63	52	58	59	32	46	52
11 - 12				54	48	51	69	39	54	53
- PM -										
12 - 1				63	67	65	69	58	64	64
1 - 2				84	85	85	76	46	61	73
2 - 3				68	65	67	54	42	48	57
3 - 4				75	65	70	41	40	41	55
4 - 5				78	70	74	41	39	40	57
5 - 6				65	61	63	37	28	33	48
6 - 7				49	57	53	48	33	41	47
7 - 8				51	46	49	37	30	34	41
8 - 9				29	24	27	24	30	27	27
9 - 10				34	21	28	28	20	24	26
10 - 11				19	16	18	15	16	16	17
11 - 12				7	8	8	9	4	7	7
TOTALS :				906	861	896	771	539	660	**776**
% Avg Day :				149%	111%	115%	99%	69%	85%	
AM (12am-10am) Peak Volumes										
15 Minute :				20	17	19	18	10	11	15
One Hour :				59	51	54	64	22	43	48
P.H.F. :				0.74	0.80	0.71	0.89	0.55	0.98	0.80
PH Begins :				8:45am	8:00am	9:00am	8:45am	7:30am	8:45am	9:00am
Mid (10am-2pm) Peak Volumes										
15 Minute :				26	23	25	27	18	19	20
One Hour :				84	85	85	77	58	65	73
P.H.F. :				0.81	0.92	0.85	0.80	0.91	0.86	0.91
PH Begins :				12:30pm	1:00pm	1:00pm	11:15am	12:00pm	12:00pm	1:00pm
PM (2pm-12am) Peak Volumes										
15 Minute :				29	22	24	18	13	15	17
One Hour :				85	72	80	54	44	49	61
P.H.F. :				0.73	0.82	0.83	0.75	0.85	0.82	0.90
PH Begins :				3:30pm	3:30pm	3:30pm	2:00pm	2:45pm	2:00pm	3:30pm

Lane #1 Weekly 24 Hour Volume Data 05/20/2013 to 05/26/2013

Time	05/20 MON	05/21 TUE	05/22 WED	05/23 THU	05/24 FRI	Weekday Average	05/25 SAT	05/26 SUN	Weekend Average	Week Average
- AM -										
12 - 1	3	4	1	0	4	2				2
1 - 2	2	4	1	1	0	2				2
2 - 3	1	4	2	1	1	2				2
3 - 4	0	1	1	1	0	1				1
4 - 5	2	1	2	0	3	2				2
5 - 6	8	5	5	11	4	7				7
6 - 7	18	10	21	14		16				16
7 - 8	45	37	24	28		34				34
8 - 9	40	38	42	35		39				39
9 - 10	60	53	57	42		53				53
10 - 11	44	55	48	68		54				54
11 - 12	64	50	37	57		52				52
- PM -										
12 - 1	73	58	73	67		68				68
1 - 2	67	74	79	67		72				72
2 - 3	62	63	52	61		60				60
3 - 4	75	100	68	67		78				78
4 - 5	73	90	63	57		71				71
5 - 6	59	92	81	64		74				74
6 - 7	63	65	38	59		56				56
7 - 8	44	45	63	50		51				51
8 - 9	48	42	34	41		41				41
9 - 10	24	27	26	34		28				28
10 - 11	13	16	17	17		16				16
11 - 12	6	6	8	8		7				7
TOTALS :	894	940	843	850	12	886				**886**
% Avg Day :	101%	106%	95%	96%	6%	100%				
AM (12am-10am) Peak Volumes										
15 Minute :	19	17	16	15	2	16				16
One Hour :	60	57	57	43	6	53				53
P.H.F. :	0.79	0.84	0.89	0.72	0.75	0.83				0.83
PH Begins :	9:00am	8:45am	9:00am	8:45am	4:45am	9:00am				9:00am
Mid (10am-2pm) Peak Volumes										
15 Minute :	27	22	23	24		22				22
One Hour :	77	74	79	73		72				72
P.H.F. :	0.71	0.84	0.86	0.76		0.82				0.82
PH Begins :	12:45pm	1:00pm	1:00pm	12:45pm		12:45pm				12:45pm
PM (2pm-12am) Peak Volumes										
15 Minute :	21	27	23	22		21				21
One Hour :	77	100	81	70		80				80
P.H.F. :	0.92	0.96	0.88	0.80		0.95				0.95
PH Begins :	3:15pm	3:00pm	5:00pm	3:15pm		3:15pm				3:15pm

Lane #2 Weekly 24 Hour Volume Data 05/13/2013 to 05/19/2013

Time	05/13 MON	05/14 TUE	05/15 WED	05/16 THU	05/17 FRI	Weekday Average	05/18 SAT	05/19 SUN	Weekend Average	Week Average
- AM -										
12 - 1					9	9	2	4	3	5
1 - 2					0	0	3	1	2	1
2 - 3					2	2	3	2	3	2
3 - 4					1	1	0	2	1	1
4 - 5					2	2	0	2	1	1
5 - 6				5	8	7	2	3	3	5
6 - 7				24	24	24	13	12	13	18
7 - 8				36	23	30	20	13	17	23
8 - 9				43	61	52	43	17	30	41
9 - 10				66	44	55	74	27	51	53
10 - 11				50	70	60	86	36	61	61
11 - 12				64	74	69	72	40	56	63
- PM -										
12 - 1				70	64	67	72	59	66	66
1 - 2				69	73	71	92	46	69	70
2 - 3				76	69	73	66	44	55	64
3 - 4				78	83	81	66	63	65	73
4 - 5				92	71	82	39	59	49	65
5 - 6				78	66	72	43	36	40	56
6 - 7				56	53	55	43	29	36	45
7 - 8				50	35	43	27	24	26	34
8 - 9				34	34	34	37	22	30	32
9 - 10				27	21	24	39	22	31	27
10 - 11				15	13	14	18	17	18	16
11 - 12				8	11	10	8	10	9	9
TOTALS :				941	911	937	868	590	735	**831**
% Avg Day :				145%	110%	113%	104%	71%	88%	
AM (12am-10am) Peak Volumes										
15 Minute :				21	20	16	26	11	18	16
One Hour :				66	61	57	74	27	52	52
P.H.F. :				0.79	0.76	0.89	0.71	0.61	0.72	0.81
PH Begins :				9:00am	8:00am	8:45am	9:00am	9:00am	9:00am	9:00am
Mid (10am-2pm) Peak Volumes										
15 Minute :				21	24	22	29	21	21	19
One Hour :				70	78	73	93	61	76	71
P.H.F. :				0.83	0.81	0.83	0.80	0.73	0.90	0.93
PH Begins :				12:00pm	11:15am	11:30am	12:30pm	12:15pm	12:15pm	12:15pm
PM (2pm-12am) Peak Volumes										
15 Minute :				28	25	26	23	31	21	23
One Hour :				93	84	85	73	72	66	73
P.H.F. :				0.83	0.88	0.82	0.79	0.58	0.79	0.79
PH Begins :				3:45pm	3:15pm	3:30pm	2:15pm	3:45pm	3:00pm	3:15pm

Lane #2 Weekly 24 Hour Volume Data 05/20/2013 to 05/26/2013

Time	05/20 MON	05/21 TUE	05/22 WED	05/23 THU	05/24 FRI	Weekday Average	05/25 SAT	05/26 SUN	Weekend Average	Week Average
- AM -										
12 - 1	3	3	1	1	4	2				2
1 - 2	1	3	0	1	4	2				2
2 - 3	2	2	0	3	3	2				2
3 - 4	0	0	1	0	0	0				0
4 - 5	4	2	2	1	1	2				2
5 - 6	9	5	7	6	4	7				7
6 - 7	23	20	22	26		23				23
7 - 8	38	28	21	25		28				28
8 - 9	46	35	34	33		37				37
9 - 10	47	48	58	43		49				49
10 - 11	50	48	46	59		51				51
11 - 12	64	50	59	60		58				58
- PM -										
12 - 1	67	66	59	59		63				63
1 - 2	72	68	63	70		68				68
2 - 3	88	64	60	59		68				68
3 - 4	64	96	85	67		78				78
4 - 5	72	97	60	66		74				74
5 - 6	60	68	60	63		63				63
6 - 7	55	83	47	59		61				61
7 - 8	43	52	59	58		53				53
8 - 9	30	29	25	28		28				28
9 - 10	35	26	30	38		32				32
10 - 11	19	8	15	4		12				12
11 - 12	5	5	6	9		6				6
TOTALS :	897	906	820	838	16	867				**867**
% Avg Day :	103%	104%	95%	97%	8%	100%				
				AM (12am-10am) Peak Volumes						
15 Minute :	15	14	21	14	3	15				15
One Hour :	51	50	58	43	6	50				50
P.H.F. :	0.85	0.89	0.69	0.77	0.75	0.83				0.83
PH Begins :	8:30am	8:45am	9:00am	9:00am	0:30am	9:00am				9:00am
				Mid (10am-2pm) Peak Volumes						
15 Minute :	25	26	21	26		20				20
One Hour :	74	76	71	71		69				69
P.H.F. :	0.88	0.73	0.89	0.81		0.86				0.86
PH Begins :	11:30am	12:30pm	12:30pm	10:30am		1:00pm				1:00pm
				PM (2pm-12am) Peak Volumes						
15 Minute :	34	32	24	31		27				27
One Hour :	88	103	85	82		84				84
P.H.F. :	0.65	0.80	0.89	0.66		0.78				0.78
PH Begins :	2:00pm	3:30pm	2:45pm	3:15pm		3:15pm				3:15pm

Weekly 24 Hour Volume Report: LOCUST AT MAPLE

Info Line 1 :
Info Line 2 :
GPS Lat/Lon :

Last Connected Device Type : Apollo
Serial Number : 89891
Lanes : 2

Lane #1 Weekly 24 Hour Volume Data 05/13/2013 to 05/19/2013

Time	05/13 MON	05/14 TUE	05/15 WED	05/16 THU	05/17 FRI	Weekday Average	05/18 SAT	05/19 SUN	Weekend Average	Week Average
- AM -										
12 - 1					12	12	3	5	4	7
1 - 2					1	1	5	0	3	2
2 - 3					2	2	2	2	2	2
3 - 4					2	2	0	1	1	1
4 - 5					4	4	0	2	1	2
5 - 6					10	10	3	4	4	6
6 - 7				13	32	30	15	18	17	22
7 - 8				58	41	50	27	16	22	36
8 - 9				81	72	77	64	31	48	62
9 - 10				75	65	70	95	33	64	67
10 - 11				68	85	77	108	55	82	79
11 - 12				106	97	102	104	42	73	87
- PM -										
12 - 1				108	89	99	103	59	81	90
1 - 2				105	87	96	110	53	82	89
2 - 3				106	94	100	84	55	70	85
3 - 4				84	92	88	66	51	59	73
4 - 5				120	93	107	58	67	63	85
5 - 6				95	85	90	50	44	47	69
6 - 7				70	62	66	61	45	53	60
7 - 8				58	43	51	41	40	41	46
8 - 9				33	50	42	61	27	44	43
9 - 10				43	31	37	43	29	36	37
10 - 11				19	21	20	22	20	21	21
11 - 12				12	13	13	9	9	9	11
TOTALS :				1254	1183	1246	1134	708	927	**1082**
% Avg Day :				159%	109%	115%	105%	65%	86%	

AM (12am-10am) Peak Volumes							
15 Minute :	25	23	22	31	10	19	20
One Hour :	86	72	78	97	36	67	69
P.H.F. :	0.86	0.78	0.89	0.78	0.90	0.88	0.86
PH Begins :	8:15am	8:00am	8:00am	8:45am	8:45am	8:45am	8:45am
Mid (10am-2pm) Peak Volumes							
15 Minute :	35	32	32	36	20	27	27
One Hour :	112	110	111	123	61	93	93
P.H.F. :	0.90	0.86	0.87	0.88	0.80	0.89	0.86
PH Begins :	10:45am	11:15am	11:15am	12:30pm	12:15pm	12:30pm	12:30pm
PM (2pm-12am) Peak Volumes							
15 Minute :	40	30	31	27	21	19	25
One Hour :	120	98	108	84	67	70	86
P.H.F. :	0.75	0.91	0.87	0.78	0.80	0.92	0.93
PH Begins :	4:00pm	4:15pm	3:30pm	2:00pm	4:00pm	2:00pm	2:00pm

Lane #1 Weekly 24 Hour Volume Data 05/20/2013 to 05/26/2013

Time	05/20 MON	05/21 TUE	05/22 WED	05/23 THU	05/24 FRI	Weekday Average	05/25 SAT	05/26 SUN	Weekend Average	Week Average
- AM -										
12 - 1	4	3	3	3	3	3				3
1 - 2	2	3	2	3	3	3				3
2 - 3	3	4	2	3	2	3				3
3 - 4	1	0	1	1	1	1				1
4 - 5	3	3	2	4	3	3				3
5 - 6	15	6	9	10	5	9				9
6 - 7	32	28	30	31		30				30
7 - 8	51	61	45	46		51				51
8 - 9	67	60	60	52		60				60
9 - 10	74	60	80	61		69				69
10 - 11	66	90	59	82		74				74
11 - 12	87	74	87	92		85				85
- PM -										
12 - 1	82	83	77	89		83				83
1 - 2	88	85	84	90		87				87
2 - 3	95	92	95	80		91				91
3 - 4	98	124	108	90		105				105
4 - 5	93	120	86	72		93				93
5 - 6	107	101	91	82		95				95
6 - 7	68	98	57	67		73				73
7 - 8	54	63	48	50		54				54
8 - 9	36	42	33	43		39				39
9 - 10	46	37	41	51		44				44
10 - 11	22	17	19	9		17				17
11 - 12	10	6	8	9		8				8
TOTALS :	1204	1260	1127	1120	17	1180				**1180**
% Avg Day :	102%	107%	96%	95%	6%	100%				

AM (12am-10am) Peak Volumes

15 Minute :	25	25	24	19	3	18				18
One Hour :	74	69	80	61	5	68				68
P.H.F. :	0.74	0.82	0.83	0.90	0.63	0.94				0.94
PH Begins :	9:00am	8:45am	9:00am	9:00am	4:45am	8:45am				8:45am

Mid (10am-2pm) Peak Volumes

15 Minute :	29	32	26	27		26				26
One Hour :	92	90	94	98		88				88
P.H.F. :	0.79	0.70	0.90	0.91		0.85				0.85
PH Begins :	11:45am	10:00am	11:15am	11:30am		11:30am				11:30am

PM (2pm-12am) Peak Volumes

15 Minute :	36	39	36	27		30				30
One Hour :	115	136	110	95		108				108
P.H.F. :	0.80	0.87	0.76	0.91		0.90				0.90
PH Begins :	3:30pm	3:30pm	2:45pm	3:15pm		3:30pm				3:30pm

Lane #2 Weekly 24 Hour Volume Data 05/13/2013 to 05/19/2013

Time	05/13 MON	05/14 TUE	05/15 WED	05/16 THU	05/17 FRI	Weekday Average	05/18 SAT	05/19 SUN	Weekend Average	Week Average
- AM -										
12 - 1					9	9	5	8	7	7
1 - 2					1	1	3	7	5	4
2 - 3					2	2	1	3	2	2
3 - 4					1	1	4	1	3	2
4 - 5					3	3	2	4	3	3
5 - 6					13	13	11	12	12	12
6 - 7				7	26	22	10	10	10	15
7 - 8				66	51	59	30	12	21	40
8 - 9				71	54	63	88	30	59	61
9 - 10				68	62	65	87	28	58	61
10 - 11				71	68	70	80	51	66	68
11 - 12				72	71	72	76	35	56	64
- PM -										
12 - 1				84	88	86	69	74	72	79
1 - 2				107	101	104	75	48	62	83
2 - 3				91	93	92	64	61	63	77
3 - 4				107	83	95	61	58	60	77
4 - 5				104	98	101	63	44	54	77
5 - 6				69	81	75	58	47	53	64
6 - 7				64	75	70	63	40	52	61
7 - 8				59	49	54	50	36	43	49
8 - 9				38	39	39	35	37	36	37
9 - 10				41	27	34	41	31	36	35
10 - 11				21	26	24	24	22	23	23
11 - 12				12	11	12	12	6	9	10
TOTALS :				1152	1132	1166	1012	705	865	**1011**
% Avg Day :				156%	112%	115%	100%	70%	86%	
AM (12am-10am) Peak Volumes										
15 Minute :				25	19	20	28	11	18	18
One Hour :				74	62	67	97	30	64	64
P.H.F. :				0.74	0.82	0.84	0.87	0.68	0.89	0.89
PH Begins :				8:15am	9:00am	8:45am	8:15am	8:00am	8:30am	8:30am
Mid (10am-2pm) Peak Volumes										
15 Minute :				30	28	29	24	24	23	23
One Hour :				109	101	104	86	74	73	83
P.H.F. :				0.91	0.90	0.90	0.90	0.77	0.91	0.94
PH Begins :				12:45pm	1:00pm	12:45pm	11:15am	12:00pm	12:00pm	12:45pm
PM (2pm-12am) Peak Volumes										
15 Minute :				42	35	32	23	19	20	24
One Hour :				113	102	109	72	61	65	84
P.H.F. :				0.67	0.73	0.94	0.78	0.80	0.81	0.95
PH Begins :				3:30pm	3:45pm	3:45pm	2:30pm	2:00pm	2:30pm	3:45pm

Lane #2 Weekly 24 Hour Volume Data 05/20/2013 to 05/26/2013

Time	05/20 MON	05/21 TUE	05/22 WED	05/23 THU	05/24 FRI	Weekday Average	05/25 SAT	05/26 SUN	Weekend Average	Week Average
- AM -										
12 - 1	2	5	2	2	2	3				3
1 - 2	2	4	0	4	1	2				2
2 - 3	1	3	2	1	2	2				2
3 - 4	0	1	0	0	1	0				0
4 - 5	3	2	2	1	3	2				2
5 - 6	12	10	9	14	3	10				10
6 - 7	31	18	30	22		25				25
7 - 8	56	53	36	45		48				48
8 - 9	56	60	53	46		54				54
9 - 10	82	68	68	58		69				69
10 - 11	60	67	62	82		68				68
11 - 12	75	67	59	77		70				70
- PM -										
12 - 1	102	70	84	88		86				86
1 - 2	83	107	99	83		93				93
2 - 3	79	92	73	77		80				80
3 - 4	92	116	87	78		93				93
4 - 5	96	111	66	75		87				87
5 - 6	85	104	81	81		88				88
6 - 7	69	68	58	65		65				65
7 - 8	52	67	59	59		59				59
8 - 9	63	52	57	50		56				56
9 - 10	38	44	31	38		38				38
10 - 11	20	21	27	19		22				22
11 - 12	5	8	12	8		8				8
TOTALS :	1164	1218	1057	1073	12	1128				**1128**
% Avg Day :	103%	108%	94%	95%	4%	100%				

AM (12am-10am) Peak Volumes

15 Minute :	31	21	20	19	2	21				21
One Hour :	82	77	68	58	4	69				69
P.H.F. :	0.66	0.92	0.85	0.76	0.50	0.82				0.82
PH Begins :	9:00am	8:30am	9:00am	9:00am	4:30am	9:00am				9:00am

Mid (10am-2pm) Peak Volumes

15 Minute :	31	31	31	25		26				26
One Hour :	102	107	99	88		93				93
P.H.F. :	0.82	0.86	0.80	0.88		0.89				0.89
PH Begins :	12:00pm	1:00pm	1:00pm	12:00pm		1:00pm				1:00pm

PM (2pm-12am) Peak Volumes

15 Minute :	28	34	32	28		29				29
One Hour :	105	128	87	88		97				97
P.H.F. :	0.94	0.94	0.73	0.79		0.93				0.93
PH Begins :	3:30pm	3:30pm	3:00pm	4:30pm		3:15pm				3:15pm

Weekly 24 Hour Volume Report: SUBSTATION 12TH

Info Line 1 :
Info Line 2 :
GPS Lat/Lon :

Last Connected Device Type : Apollo
Serial Number : 89892
Lanes : 2

Lane #1 Weekly 24 Hour Volume Data 05/06/2013 to 05/12/2013

Time	05/06 MON	05/07 TUE	05/08 WED	05/09 THU	05/10 FRI	Weekday Average	05/11 SAT	05/12 SUN	Weekend Average	Week Average
12 - 1							30	10	20	20
1 - 2							13	7	10	10
2 - 3					3	12	8	5	7	7
3 - 4					5	5	7	1	4	4
4 - 5					2	2	5	2	4	3
5 - 6					11	11	10	3	7	8
6 - 7					35	35	20	2	11	19
7 - 8					72	72	43	4	24	40
8 - 9					141	141	85	9	47	78
9 - 10					119	119	101	15	58	78
10 - 11					87	87	130	19	75	79
11 - 12					129	129	138	11	75	93
12 - 1					119	119	128	17	73	88
1 - 2					151	151	163	23	93	112
2 - 3					172	172	148	28	88	116
3 - 4					212	212	190	34	112	145
4 - 5					188	188	185	37	111	137
5 - 6					233	233	109	36	73	126
6 - 7					222	222	27	28	28	92
7 - 8					163	163	27	27	27	72
8 - 9					136	136	23	32	28	64
9 - 10					117	117	44	27	36	63
10 - 11					101	101	28	30	29	53
11 - 12					36	36	15	13	14	21
TOTALS :					2454	2463	1677	420	1054	**1528**
% Avg Day :					181%	176%	110%	27%	69%	

AM (12am-10am) Peak Volumes

15 Minute :	48	48	30	5	17	27
One Hour :	158	158	107	15	61	90
P.H.F. :	0.82	0.82	0.89	0.75	0.90	0.83
PH Begins :	8:30am	8:30am	8:45am	9:00am	8:45am	8:30am

Mid (10am-2pm) Peak Volumes

15 Minute :	42	42	50	10	25	29
One Hour :	151	151	163	26	94	112
P.H.F. :	0.90	0.90	0.82	0.93	0.94	0.97
PH Begins :	12:45pm	12:45pm	1:00pm	12:30pm	1:00pm	1:00pm

PM (2pm-12am) Peak Volumes

15 Minute :	74	74	55	14	33	41
One Hour :	241	241	190	41	113	145
P.H.F. :	0.81	0.81	0.86	0.73	0.94	0.88
PH Begins :	5:30pm	5:30pm	3:00pm	4:45pm	4:00pm	3:00pm

Lane #1 Weekly 24 Hour Volume Data 05/13/2013 to 05/19/2013

Time	05/13 MON	05/14 TUE	05/15 WED	05/16 THU	05/17 FRI	Weekday Average	05/18 SAT	05/19 SUN	Weekend Average	Week Average
12 - 1	5	10	21	10		12				12
1 - 2	1	9	6			5				5
2 - 3	0	7	5			4				4
3 - 4	3	0	5			3				3
4 - 5	0	4	3			2				2
5 - 6	4	9	10			8				8
6 - 7	10	18	38			22				22
7 - 8	20	42	85			49				49
8 - 9	44	104	141			96				96
9 - 10	39	98	107			81				81
10 - 11	50	98	92			80				80
11 - 12	39	103	90			77				77
12 - 1	32	107	122			87				87
1 - 2	52	139	103			98				98
2 - 3	120	142	141			134				134
3 - 4	115	221	217			184				184
4 - 5	87	220	201			169				169
5 - 6	77	233	229			180				180
6 - 7	96	205	248			183				183
7 - 8	76	162	154			131				131
8 - 9	80	103	116			100				100
9 - 10	62	101	111			91				91
10 - 11	35	67	61			54				54
11 - 12	31	26	29			29				29
TOTALS :	1078	2228	2335	10		1879				**1879**
% Avg Day :	57%	119%	124%	13%		100%				

AM (12am-10am) Peak Volumes						
15 Minute :	14	31	40	4	28	28
One Hour :	44	112	147	10	101	101
P.H.F. :	0.79	0.90	0.92	0.63	0.90	0.90
PH Begins :	8:00am	8:15am	8:15am	12:00am	8:15am	8:15am
Mid (10am-2pm) Peak Volumes						
15 Minute :	23	40	34		27	27
One Hour :	53	142	127		98	98
P.H.F. :	0.74	0.89	0.93		0.91	0.91
PH Begins :	12:30pm	12:45pm	11:45am		12:30pm	12:30pm
PM (2pm-12am) Peak Volumes						
15 Minute :	40	67	77		53	53
One Hour :	120	233	279		203	203
P.H.F. :	0.88	0.92	0.91		0.96	0.96
PH Begins :	2:00pm	5:00pm	5:30pm		5:30pm	5:30pm

Lane #2 Weekly 24 Hour Volume Data 05/06/2013 to 05/12/2013

Time	05/06 MON	05/07 TUE	05/08 WED	05/09 THU	05/10 FRI	Weekday Average	05/11 SAT	05/12 SUN	Weekend Average	Week Average
12 - 1							11	34	23	23
1 - 2							10	19	15	15
2 - 3					0	0	4	11	8	7
3 - 4					7	7	5	2	4	5
4 - 5					23	23	7	6	7	12
5 - 6					61	61	19	29	24	36
6 - 7					149	149	87	34	61	90
7 - 8					188	188	94	91	93	124
8 - 9					169	169	132	138	135	146
9 - 10					184	184	176	179	178	180
10 - 11					110	110	141	255	198	169
11 - 12					118	118	154	244	199	172
12 - 1					135	135	166	318	242	206
1 - 2					116	116	155	301	228	191
2 - 3					134	134	117	327	222	193
3 - 4					211	211	131	311	221	218
4 - 5					179	179	138	318	228	212
5 - 6					152	152	169	279	224	200
6 - 7					126	126	259	230	245	205
7 - 8					95	95	206	171	189	157
8 - 9					71	71	185	185	185	147
9 - 10					71	71	146	132	139	116
10 - 11					38	38	95	56	76	63
11 - 12					18	18	60	25	43	34
TOTALS :					2355	2355	2667	3695	3187	**2921**
% Avg Day :					91%	88%	91%	126%	109%	
AM (12am-10am) Peak Volumes										
15 Minute :					62	62	56	50	46	51
One Hour :					204	204	176	186	179	183
P.H.F. :					0.82	0.82	0.79	0.93	0.97	0.90
PH Begins :					8:30am	8:30am	8:30am	8:45am	9:00am	8:30am
Mid (10am-2pm) Peak Volumes										
15 Minute :					43	43	48	97	70	59
One Hour :					145	145	169	318	244	206
P.H.F. :					0.84	0.84	0.96	0.82	0.87	0.87
PH Begins :					11:45am	11:45am	12:30pm	12:00pm	12:30pm	12:00pm
PM (2pm-12am) Peak Volumes										
15 Minute :					66	66	72	99	65	65
One Hour :					222	222	259	339	246	227
P.H.F. :					0.84	0.84	0.90	0.86	0.95	0.87
PH Begins :					3:30pm	3:30pm	6:00pm	2:15pm	6:00pm	3:30pm

Lane #2 Weekly 24 Hour Volume Data 05/13/2013 to 05/19/2013

Time	05/13 MON	05/14 TUE	05/15 WED	05/16 THU	05/17 FRI	Weekday Average	05/18 SAT	05/19 SUN	Weekend Average	Week Average
12 - 1	15	10	7	3		9				9
1 - 2	8	5	4			6				6
2 - 3	5	7	4			5				5
3 - 4	8	12	7			9				9
4 - 5	26	21	25			24				24
5 - 6	81	96	74			84				84
6 - 7	191	200	186			192				192
7 - 8	234	272	195			234				234
8 - 9	270	253	156			226				226
9 - 10	229	203	154			195				195
10 - 11	187	118	110			138				138
11 - 12	183	112	123			139				139
12 - 1	247	114	131			164				164
1 - 2	208	104	118			143				143
2 - 3	167	109	107			128				128
3 - 4	312	155	172			213				213
4 - 5	294	154	147			198				198
5 - 6	349	159	145			218				218
6 - 7	302	120	133			185				185
7 - 8	199	78	85			121				121
8 - 9	147	58	76			94				94
9 - 10	102	72	45			73				73
10 - 11	54	38	27			40				40
11 - 12	19	14	5			13				13
TOTALS :	3837	2484	2236	3		2851				**2851**
% Avg Day :	135%	87%	78%	3%		100%				

AM (12am-10am) Peak Volumes

15 Minute :	83	94	62	3		76				76
One Hour :	281	279	211	3		242				242
P.H.F. :	0.85	0.74	0.85	0.25		0.80				0.80
PH Begins :	8:15am	8:30am	6:15am	12:00am		8:30am				8:30am

Mid (10am-2pm) Peak Volumes

15 Minute :	69	41	41			43				43
One Hour :	250	125	138			163				163
P.H.F. :	0.91	0.76	0.84			0.95				0.95
PH Begins :	12:15pm	10:15am	11:30am			12:00pm				12:00pm

PM (2pm-12am) Peak Volumes

15 Minute :	103	48	53			59				59
One Hour :	355	164	173			217				217
P.H.F. :	0.86	0.89	0.82			0.92				0.92
PH Begins :	4:45pm	5:15pm	3:15pm			4:45pm				4:45pm

Weekly 24 Hour Volume Report: SUBSTATION BRDG

Info Line 1 :
Info Line 2 :
GPS Lat/Lon :

Last Connected Device Type : Apollo
Serial Number : 90552
Lanes : 2

Lane #1 Weekly 24 Hour Volume Data 05/06/2013 to 05/12/2013

Time	05/06 MON	05/07 TUE	05/08 WED	05/09 THU	05/10 FRI	Weekday Average	05/11 SAT	05/12 SUN	Weekend Average	Week Average
12 - 1							13	20	17	17
1 - 2							9	10	10	10
2 - 3							5	2	4	4
3 - 4					8	8	8	3	6	6
4 - 5					20	20	7	4	6	10
5 - 6					50	50	20	18	19	29
6 - 7					127	127	61	27	44	72
7 - 8					158	158	84	47	66	96
8 - 9					197	197	109	73	91	126
9 - 10					138	138	143	94	119	125
10 - 11					106	106	117	123	120	115
11 - 12					113	113	134	129	132	125
12 - 1					130	130	148	167	158	148
1 - 2					119	119	134	120	127	124
2 - 3					130	130	109	160	135	133
3 - 4					201	201	113	174	144	163
4 - 5					174	174	114	146	130	145
5 - 6					142	142	126	148	137	139
6 - 7					121	121	124	117	121	121
7 - 8					100	100	82	95	89	92
8 - 9					73	73	72	106	89	84
9 - 10					75	75	67	70	69	71
10 - 11					40	40	54	40	47	45
11 - 12					22	22	32	15	24	23
TOTALS :					2244	2244	1885	1908	1904	**2023**
% Avg Day :					127%	127%	93%	94%	94%	
AM (12am-10am) Peak Volumes										
15 Minute :					69	69	42	32	37	42
One Hour :					207	207	143	107	123	144
P.H.F. :					0.75	0.75	0.85	0.84	0.83	0.86
PH Begins :					8:30am	8:30am	9:00am	8:45am	8:45am	8:30am
Mid (10am-2pm) Peak Volumes										
15 Minute :					46	46	44	61	50	49
One Hour :					149	149	150	167	159	156
P.H.F. :					0.81	0.81	0.85	0.68	0.80	0.80
PH Begins :					11:30am	11:30am	11:45am	11:45am	11:45am	11:45am
PM (2pm-12am) Peak Volumes										
15 Minute :					65	65	38	50	40	47
One Hour :					206	206	132	178	147	163
P.H.F. :					0.79	0.79	0.89	0.89	0.92	0.87
PH Begins :					3:15pm	3:15pm	4:30pm	2:15pm	2:15pm	3:00pm

Lane #1 Weekly 24 Hour Volume Data 05/13/2013 to 05/19/2013

Time	05/13 MON	05/14 TUE	05/15 WED	05/16 THU	05/17 FRI	Weekday Average	05/18 SAT	05/19 SUN	Weekend Average	Week Average
12 - 1	10	6	6	4		7				7
1 - 2	5	4	2			4				4
2 - 3	1	3	3			2				2
3 - 4	9	9	9			9				9
4 - 5	16	20	23			20				20
5 - 6	67	74	65			69				69
6 - 7	135	144	159			146				146
7 - 8	159	184	173			172				172
8 - 9	192	196	196			195				195
9 - 10	149	156	134			146				146
10 - 11	114	114	107			112				112
11 - 12	117	117	118			117				117
12 - 1	133	132	130			132				132
1 - 2	112	104	118			111				111
2 - 3	76	103	101			93				93
3 - 4	169	172	185			175				175
4 - 5	165	140	142			149				149
5 - 6	146	162	175			161				161
6 - 7	119	124	134			126				126
7 - 8	99	81	94			91				91
8 - 9	78	68	89			78				78
9 - 10	55	76	54			62				62
10 - 11	28	39	27			31				31
11 - 12	9	13	10			11				11
TOTALS :	2163	2241	2254	4		2219				**2219**
% Avg Day :	97%	101%	102%	6%		100%				

AM (12am-10am) Peak Volumes

15 Minute :	66	75	68	3	70	70
One Hour :	210	221	209	4	210	210
P.H.F. :	0.80	0.74	0.77	0.33	0.75	0.75
PH Begins :	8:15am	8:30am	8:15am	12:00am	8:15am	8:15am

Mid (10am-2pm) Peak Volumes

15 Minute :	48	38	40		36	36
One Hour :	141	139	130		132	132
P.H.F. :	0.73	0.91	0.81		0.92	0.92
PH Begins :	11:30am	12:15pm	11:15am		12:15pm	12:15pm

PM (2pm-12am) Peak Volumes

15 Minute :	48	54	51		47	47
One Hour :	177	172	185		175	175
P.H.F. :	0.94	0.80	0.91		0.93	0.93
PH Begins :	4:30pm	3:00pm	3:00pm		3:00pm	3:00pm

Lane #2 Weekly 24 Hour Volume Data 05/06/2013 to 05/12/2013

Time	05/06 MON	05/07 TUE	05/08 WED	05/09 THU	05/10 FRI	Weekday Average	05/11 SAT	05/12 SUN	Weekend Average	Week Average
12 - 1							28	29	29	29
1 - 2							14	14	14	14
2 - 3							5	15	10	10
3 - 4					5	5	7	0	4	4
4 - 5					4	4	3	6	5	4
5 - 6					13	13	10	6	8	10
6 - 7					39	39	20	6	13	22
7 - 8					91	91	43	39	41	58
8 - 9					144	144	102	81	92	109
9 - 10					110	110	103	89	96	101
10 - 11					91	91	141	136	139	123
11 - 12					122	122	132	112	122	122
12 - 1					131	131	111	154	133	132
1 - 2					146	146	168	171	170	162
2 - 3					157	157	126	186	156	156
3 - 4					201	201	166	144	155	170
4 - 5					189	189	167	148	158	168
5 - 6					216	216	129	126	128	157
6 - 7					207	207	140	119	130	155
7 - 8					152	152	128	121	125	134
8 - 9					116	116	109	110	110	112
9 - 10					112	112	84	69	77	88
10 - 11					82	82	69	40	55	64
11 - 12					33	33	39	21	30	31
TOTALS :					2361	2361	2044	1942	2000	**2135**
% Avg Day :					126%	126%	96%	91%	94%	
AM (12am-10am) Peak Volumes										
15 Minute :					53	53	37	32	35	41
One Hour :					159	159	114	102	108	124
P.H.F. :					0.75	0.75	0.77	0.80	0.77	0.76
PH Begins :					8:30am	8:30am	8:45am	8:30am	8:30am	8:30am
Mid (10am-2pm) Peak Volumes										
15 Minute :					42	42	48	48	48	44
One Hour :					146	146	168	171	171	161
P.H.F. :					0.87	0.87	0.88	0.91	0.89	0.91
PH Begins :					1:00pm	1:00pm	1:00pm	1:00pm	1:00pm	1:00pm
PM (2pm-12am) Peak Volumes										
15 Minute :					65	65	50	50	43	47
One Hour :					216	216	170	186	161	173
P.H.F. :					0.95	0.95	0.85	0.93	0.96	0.92
PH Begins :					5:00pm	5:00pm	3:45pm	2:00pm	2:15pm	3:45pm

Lane #2 Weekly 24 Hour Volume Data 05/13/2013 to 05/19/2013

Time	05/13 MON	05/14 TUE	05/15 WED	05/16 THU	05/17 FRI	Weekday Average	05/18 SAT	05/19 SUN	Weekend Average	Week Average
12 - 1	10	12	17	9		13				13
1 - 2	5	3	6			5				5
2 - 3	1	9	4			5				5
3 - 4	5	3	5			4				4
4 - 5	6	7	6			6				6
5 - 6	12	18	11			14				14
6 - 7	33	37	44			38				38
7 - 8	84	107	103			98				98
8 - 9	123	142	135			133				133
9 - 10	131	105	111			116				116
10 - 11	114	101	97			104				104
11 - 12	93	127	98			106				106
12 - 1	124	132	131			129				129
1 - 2	133	141	107			127				127
2 - 3	136	125	119			127				127
3 - 4	203	210	224			212				212
4 - 5	178	219	195			197				197
5 - 6	255	231	227			238				238
6 - 7	201	224	231			219				219
7 - 8	143	132	146			140				140
8 - 9	103	97	119			106				106
9 - 10	75	102	102			93				93
10 - 11	39	44	53			45				45
11 - 12	26	21	27			25				25
TOTALS :	2233	2349	2318	9		2300				**2300**
% Avg Day :	97%	102%	101%	13%		100%				

AM (12am-10am) Peak Volumes

15 Minute :	45	53	48	4		45				45
One Hour :	136	151	137	9		139				139
P.H.F. :	0.77	0.71	0.71	0.56		0.77				0.77
PH Begins :	8:30am	8:15am	8:15am	12:00am		8:15am				8:15am

Mid (10am-2pm) Peak Volumes

15 Minute :	38	47	40			36				36
One Hour :	139	151	131			138				138
P.H.F. :	0.91	0.80	0.82			0.96				0.96
PH Begins :	12:30pm	12:30pm	12:00pm			12:30pm				12:30pm

PM (2pm-12am) Peak Volumes

15 Minute :	71	65	74			64				64
One Hour :	255	236	261			243				243
P.H.F. :	0.90	0.91	0.93			0.95				0.95
PH Begins :	5:00pm	4:45pm	5:30pm			5:15pm				5:15pm

Weekly 24 Hour Volume Report: WASHINGTON 1ST

Info Line 1 :
Info Line 2 :
GPS Lat/Lon :

Last Connected Device Type : Apollo
Serial Number : 89894
Lanes : 2

Lane #1 Weekly 24 Hour Volume Data 06/04/2012 to 06/10/2012

Time	06/04 MON	06/05 TUE	06/06 WED	06/07 THU	06/08 FRI	Weekday Average	06/09 SAT	06/10 SUN	Weekend Average	Week Average
12 - 1					24	24	26	20	23	23
1 - 2					5	5	16	20	18	14
2 - 3					10	10	14	17	16	14
3 - 4				15	27	21	7	13	10	16
4 - 5				32	21	27	15	12	14	20
5 - 6				75	87	81	33	16	25	53
6 - 7				163	163	163	58	45	52	107
7 - 8				196	186	191	114	60	87	139
8 - 9				263	269	266	206	110	158	212
9 - 10				320	364	342	253	187	220	281
10 - 11				390	411	401	340	264	302	351
11 - 12				382	473	428	402	240	321	374
12 - 1				458	510	484	387	398	393	438
1 - 2				424	481	453	407	321	364	408
2 - 3				371	488	430	383	325	354	392
3 - 4				368	408	388	338	285	312	350
4 - 5				409	405	407	351	306	329	368
5 - 6				336	362	349	287	294	291	320
6 - 7				314	317	316	256	212	234	275
7 - 8				212	262	237	211	205	208	223
8 - 9				190	217	204	164	169	167	185
9 - 10				129	146	138	147	124	136	137
10 - 11				61	97	79	101	73	87	83
11 - 12				28	52	40	38	27	33	36
TOTALS :				5136	5785	5484	4554	3743	4154	**4819**
% Avg Day :				122%	120%	114%	95%	78%	86%	
AM (12am-10am) Peak Volumes										
15 Minute :				102	109	95	72	68	70	82
One Hour :				342	364	343	253	187	221	281
P.H.F. :				0.84	0.83	0.90	0.88	0.69	0.79	0.86
PH Begins :				8:45am	9:00am	9:00am	9:00am	9:00am	9:00am	9:00am
Mid (10am-2pm) Peak Volumes										
15 Minute :				134	132	132	124	123	109	117
One Hour :				467	510	489	414	398	395	441
P.H.F. :				0.87	0.97	0.93	0.88	0.81	0.91	0.94
PH Begins :				11:45am	12:00pm	11:45am	11:45am	12:00pm	11:45am	11:45am
PM (2pm-12am) Peak Volumes										
15 Minute :				112	139	117	113	91	95	106
One Hour :				414	488	430	383	325	355	392
P.H.F. :				0.92	0.88	0.92	0.85	0.96	0.93	0.92
PH Begins :				4:15pm	2:00pm	2:00pm	2:00pm	2:00pm	2:00pm	2:00pm

Lane #1 Weekly 24 Hour Volume Data 06/11/2012 to 06/17/2012

Time	06/11 MON	06/12 TUE	06/13 WED	06/14 THU	06/15 FRI	Weekday Average	06/16 SAT	06/17 SUN	Weekend Average	Week Average
12 - 1	19	21	13	25	15	19				19
1 - 2	13	11	11	10	15	12				12
2 - 3	11	17	19	15		16				16
3 - 4	18	22	18	14		18				18
4 - 5	23	33	23	25		26				26
5 - 6	89	80	74	82		81				81
6 - 7	151	173	164	174		166				166
7 - 8	189	193	198	200		195				195
8 - 9	242	236	285	269		258				258
9 - 10	308	335	324	335		326				326
10 - 11	392	394	405	381		393				393
11 - 12	364	448	446	426		421				421
12 - 1	429	461	459	439		447				447
1 - 2	430	460	466	465		455				455
2 - 3	357	489	415	434		424				424
3 - 4	362	413	396	412		396				396
4 - 5	361	388	416	399		391				391
5 - 6	349	405	360	378		373				373
6 - 7	310	325	311	311		314				314
7 - 8	290	262	256	275		271				271
8 - 9	181	209	226	249		216				216
9 - 10	169	181	222	264		209				209
10 - 11	85	114	181	236		154				154
11 - 12	34	39	78	73		56				56
TOTALS :	5176	5709	5766	5891	30	5637				**5637**
% Avg Day :	92%	101%	102%	105%	6%	100%				
				AM (12am-10am) Peak Volumes						
15 Minute :	91	100	95	105	7	93				93
One Hour :	308	335	324	347	15	326				326
P.H.F. :	0.85	0.84	0.85	0.83	0.54	0.88				0.88
PH Begins :	9:00am	9:00am	9:00am	8:45am	12:00am	9:00am				9:00am
				Mid (10am-2pm) Peak Volumes						
15 Minute :	131	133	129	128		127				127
One Hour :	439	469	484	466		461				461
P.H.F. :	0.84	0.88	0.94	0.91		0.95				0.95
PH Begins :	12:15pm	11:30am	12:45pm	11:30am		11:30am				11:30am
				PM (2pm-12am) Peak Volumes						
15 Minute :	112	131	115	119		109				109
One Hour :	408	489	416	439		424				424
P.H.F. :	0.91	0.93	0.91	0.95		0.97				0.97
PH Begins :	4:30pm	2:00pm	4:00pm	3:30pm		2:00pm				2:00pm

Lane #2 Weekly 24 Hour Volume Data 06/04/2012 to 06/10/2012

Time	06/04 MON	06/05 TUE	06/06 WED	06/07 THU	06/08 FRI	Weekday Average	06/09 SAT	06/10 SUN	Weekend Average	Week Average
12 - 1					23	23	39	35	37	32
1 - 2					18	18	27	18	23	21
2 - 3					7	7	20	19	20	15
3 - 4				16	18	17	6	10	8	13
4 - 5				12	10	11	8	12	10	11
5 - 6				29	22	26	16	8	12	19
6 - 7				67	60	64	31	25	28	46
7 - 8				127	125	126	91	45	68	97
8 - 9				218	240	229	148	117	133	181
9 - 10				312	282	297	202	158	180	239
10 - 11				347	353	350	301	209	255	303
11 - 12				373	397	385	354	240	297	341
12 - 1				367	437	402	349	283	316	359
1 - 2				381	421	401	337	316	327	364
2 - 3				398	443	421	328	277	303	362
3 - 4				396	427	412	354	319	337	374
4 - 5				400	411	406	298	234	266	336
5 - 6				439	427	433	269	243	256	345
6 - 7				336	393	365	286	204	245	305
7 - 8				242	280	261	227	188	208	234
8 - 9				188	237	213	176	147	162	187
9 - 10				144	190	167	132	135	134	150
10 - 11				86	143	115	102	75	89	102
11 - 12				33	65	49	81	36	59	54
TOTALS :				4911	5429	5198	4182	3353	3773	**4490**
% Avg Day :				125%	121%	116%	93%	75%	84%	
				AM (12am-10am) Peak Volumes						
15 Minute :				104	101	103	57	50	50	76
One Hour :				312	282	299	202	160	181	239
P.H.F. :				0.75	0.70	0.73	0.89	0.80	0.91	0.79
PH Begins :				9:00am	9:00am	9:00am	9:00am	8:45am	9:00am	9:00am
				Mid (10am-2pm) Peak Volumes						
15 Minute :				103	115	106	99	88	88	97
One Hour :				392	437	407	354	320	338	372
P.H.F. :				0.95	0.95	0.96	0.95	0.91	0.96	0.96
PH Begins :				10:30am	12:00pm	12:30pm	11:00am	12:30pm	12:30pm	12:30pm
				PM (2pm-12am) Peak Volumes						
15 Minute :				131	126	118	102	87	95	99
One Hour :				457	453	438	354	324	339	375
P.H.F. :				0.87	0.90	0.93	0.87	0.93	0.89	0.95
PH Begins :				4:30pm	2:15pm	4:30pm	3:00pm	2:45pm	2:45pm	2:45pm

Lane #2 Weekly 24 Hour Volume Data 06/11/2012 to 06/17/2012

Time	06/11 MON	06/12 TUE	06/13 WED	06/14 THU	06/15 FRI	Weekday Average	06/16 SAT	06/17 SUN	Weekend Average	Week Average
12 - 1	36	44	30	30	28	34				34
1 - 2	9	13	13	17	10	12				12
2 - 3	9	13	12	9		11				11
3 - 4	3	13	16	11		11				11
4 - 5	13	15	16	13		14				14
5 - 6	27	35	27	37		32				32
6 - 7	64	73	71	73		70				70
7 - 8	97	135	141	139		128				128
8 - 9	199	197	235	243		219				219
9 - 10	281	250	332	296		290				290
10 - 11	341	353	393	382		367				367
11 - 12	396	395	466	438		424				424
12 - 1	390	400	483	473		437				437
1 - 2	401	461	459	466		447				447
2 - 3	362	433	421	426		411				411
3 - 4	405	464	423	430		431				431
4 - 5	424	481	493	466		466				466
5 - 6	427	434	447	456		441				441
6 - 7	347	394	420	414		394				394
7 - 8	230	252	304	320		277				277
8 - 9	250	229	241	285		251				251
9 - 10	182	188	177	205		188				188
10 - 11	113	139	132	160		136				136
11 - 12	39	45	77	72		58				58
TOTALS :	5045	5456	5829	5861	38	5549				**5549**
% Avg Day :	91%	98%	105%	106%	8%	100%				

AM (12am-10am) Peak Volumes

15 Minute :	82	70	100	84	11	78	78
One Hour :	281	250	332	296	28	290	290
P.H.F. :	0.86	0.89	0.83	0.88	0.64	0.93	0.93
PH Begins :	9:00am	9:00am	9:00am	9:00am	12:00am	9:00am	9:00am

Mid (10am-2pm) Peak Volumes

15 Minute :	126	125	132	136		122	122
One Hour :	429	461	509	492		457	457
P.H.F. :	0.85	0.92	0.96	0.90		0.94	0.94
PH Begins :	12:30pm	1:00pm	11:30am	12:45pm		12:45pm	12:45pm

PM (2pm-12am) Peak Volumes

15 Minute :	133	130	137	139		124	124
One Hour :	451	487	493	506		481	481
P.H.F. :	0.85	0.94	0.90	0.91		0.97	0.97
PH Begins :	4:45pm	3:45pm	4:00pm	4:15pm		4:15pm	4:15pm

Weekly 24 Hour Volume Report: WASHINGTON PARK

Info Line 1 :
Info Line 2 :
GPS Lat/Lon :

Last Connected Device Type : Apollo
Serial Number : 90552
Lanes : 2

Lane #1 Weekly 24 Hour Volume Data 06/04/2012 to 06/10/2012

Time	06/04 MON	06/05 TUE	06/06 WED	06/07 THU	06/08 FRI	Weekday Average	06/09 SAT	06/10 SUN	Weekend Average	Week Average
12 - 1					26	26	50	44	47	40
1 - 2					13	13	27	24	26	21
2 - 3				6	5	6	21	22	22	14
3 - 4				17	19	18	4	7	6	12
4 - 5				18	12	15	5	12	9	12
5 - 6				23	22	23	15	9	12	17
6 - 7				43	50	47	25	22	24	35
7 - 8				115	118	117	66	43	55	86
8 - 9				206	216	211	143	117	130	171
9 - 10				267	253	260	192	151	172	216
10 - 11				337	328	333	279	222	251	292
11 - 12				345	321	333	310	196	253	293
12 - 1				339	416	378	301	290	296	337
1 - 2				363	351	357	325	278	302	329
2 - 3				354	398	376	285	268	277	326
3 - 4				349	353	351	287	260	274	312
4 - 5				359	352	356	288	212	250	303
5 - 6				421	378	400	258	216	237	318
6 - 7				355	350	353	272	206	239	296
7 - 8				214	267	241	198	194	196	218
8 - 9				163	206	185	181	143	162	173
9 - 10				139	161	150	112	129	121	135
10 - 11				91	134	113	108	78	93	103
11 - 12				38	59	49	67	33	50	49
TOTALS :				4562	4808	4711	3819	3176	3504	**4108**
% Avg Day :				121%	117%	115%	93%	77%	85%	
AM (12am-10am) Peak Volumes										
15 Minute :				80	76	77	57	45	51	64
One Hour :				267	256	262	192	151	173	216
P.H.F. :				0.83	0.84	0.85	0.84	0.84	0.85	0.84
PH Begins :				9:00am	8:45am	9:00am	9:00am	9:00am	9:00am	9:00am
Mid (10am-2pm) Peak Volumes										
15 Minute :				105	111	101	92	95	86	88
One Hour :				363	416	384	345	297	321	344
P.H.F. :				0.90	0.94	0.95	0.94	0.78	0.93	0.98
PH Begins :				12:45pm	12:00pm	12:15pm	12:30pm	12:30pm	12:30pm	12:15pm
PM (2pm-12am) Peak Volumes										
15 Minute :				112	112	106	85	78	75	86
One Hour :				421	398	401	311	273	277	327
P.H.F. :				0.94	0.89	0.95	0.91	0.88	0.94	0.96
PH Begins :				5:00pm	2:00pm	5:00pm	3:30pm	2:15pm	2:00pm	2:00pm

Lane #1 Weekly 24 Hour Volume Data 06/11/2012 to 06/17/2012

Time	06/11 MON	06/12 TUE	06/13 WED	06/14 THU	06/15 FRI	Weekday Average	06/16 SAT	06/17 SUN	Weekend Average	Week Average
12 - 1	35	26	26	34	32	31				31
1 - 2	7	11	13	19	15	13				13
2 - 3	7	8	13	11	7	10				10
3 - 4	7	7	11	13		10				10
4 - 5	12	12	11	13		12				12
5 - 6	20	34	27	25		27				27
6 - 7	53	62	59	66		60				60
7 - 8	116	146	186	155		151				151
8 - 9	202	189	221	225		209				209
9 - 10	251	243	274	279		262				262
10 - 11	340	297	330	316		321				321
11 - 12	339	333	370	365		352				352
12 - 1	323	355	388	379		361				361
1 - 2	367	401	395	406		392				392
2 - 3	357	372	352	342		356				356
3 - 4	343	417	387	348		374				374
4 - 5	355	387	390	384		379				379
5 - 6	425	412	434	427		425				425
6 - 7	350	381	327	347		351				351
7 - 8	241	260	253	269		256				256
8 - 9	236	198	232	218		221				221
9 - 10	174	207	166	177		181				181
10 - 11	120	127	120	193		140				140
11 - 12	40	46	88	92		67				67
TOTALS :	4720	4931	5073	5103	54	4961				**4961**
% Avg Day :	95%	99%	102%	103%	10%	100%				
AM (12am-10am) Peak Volumes										
15 Minute :	71	80	78	82	11	70				70
One Hour :	255	243	274	279	32	261				261
P.H.F. :	0.90	0.76	0.88	0.85	0.73	0.93				0.93
PH Begins :	8:45am	9:00am	9:00am	9:00am	12:00am	9:00am				9:00am
Mid (10am-2pm) Peak Volumes										
15 Minute :	106	126	118	119		104				104
One Hour :	367	401	420	406		392				392
P.H.F. :	0.90	0.80	0.89	0.85		0.94				0.94
PH Begins :	1:00pm	1:00pm	12:30pm	1:00pm		1:00pm				1:00pm
PM (2pm-12am) Peak Volumes										
15 Minute :	124	116	118	124		112				112
One Hour :	445	424	434	429		425				425
P.H.F. :	0.90	0.95	0.92	0.86		0.95				0.95
PH Begins :	5:15pm	4:45pm	5:00pm	5:15pm		5:00pm				5:00pm

Lane #2 Weekly 24 Hour Volume Data 06/04/2012 to 06/10/2012

Time	06/04 MON	06/05 TUE	06/06 WED	06/07 THU	06/08 FRI	Weekday Average	06/09 SAT	06/10 SUN	Weekend Average	Week Average
12 - 1					18	18	28	17	23	21
1 - 2					6	6	18	17	18	14
2 - 3				11	5	8	13	11	12	10
3 - 4				10	16	13	5	6	6	9
4 - 5				28	14	21	8	13	11	16
5 - 6				59	77	68	30	11	21	44
6 - 7				136	130	133	42	39	41	87
7 - 8				196	178	187	83	54	69	128
8 - 9				229	249	239	197	102	150	194
9 - 10				315	289	302	241	145	193	248
10 - 11				314	307	311	287	253	270	290
11 - 12				299	371	335	291	196	244	289
12 - 1				346	407	377	317	347	332	354
1 - 2				375	367	371	325	265	295	333
2 - 3				325	377	351	309	264	287	319
3 - 4				330	321	326	300	247	274	300
4 - 5				337	304	321	288	264	276	298
5 - 6				305	296	301	251	240	246	273
6 - 7				281	274	278	214	196	205	241
7 - 8				206	219	213	186	166	176	194
8 - 9				131	175	153	146	178	162	158
9 - 10				114	110	112	110	100	105	109
10 - 11				58	88	73	115	67	91	82
11 - 12				27	43	35	44	28	36	36
TOTALS :				4432	4641	4552	3848	3226	3543	**4047**
% Avg Day :				119%	115%	112%	95%	80%	88%	
AM (12am-10am) Peak Volumes										
15 Minute :				93	87	90	61	51	56	71
One Hour :				315	289	303	241	145	193	248
P.H.F. :				0.85	0.83	0.84	0.99	0.71	0.86	0.87
PH Begins :				9:00am	9:00am	9:00am	9:00am	9:00am	9:00am	9:00am
Mid (10am-2pm) Peak Volumes										
15 Minute :				103	110	97	94	107	95	94
One Hour :				375	412	380	327	371	348	363
P.H.F. :				0.91	0.94	0.98	0.97	0.87	0.92	0.97
PH Begins :				1:00pm	12:15pm	12:30pm	12:30pm	12:15pm	12:15pm	12:15pm
PM (2pm-12am) Peak Volumes										
15 Minute :				97	107	95	86	80	77	83
One Hour :				344	377	353	309	275	292	319
P.H.F. :				0.89	0.88	0.93	0.90	0.86	0.95	0.96
PH Begins :				4:15pm	2:00pm	2:00pm	2:00pm	3:30pm	2:15pm	2:00pm

Lane #2 Weekly 24 Hour Volume Data 06/11/2012 to 06/17/2012

Time	06/11 MON	06/12 TUE	06/13 WED	06/14 THU	06/15 FRI	Weekday Average	06/16 SAT	06/17 SUN	Weekend Average	Week Average
12 - 1	23	14	12	29	17	19				19
1 - 2	10	10	10	16	9	11				11
2 - 3	10	9	11	14	7	11				11
3 - 4	13	17	19	11		15				15
4 - 5	24	26	17	25		23				23
5 - 6	70	62	68	64		66				66
6 - 7	129	142	139	148		140				140
7 - 8	177	177	180	200		184				184
8 - 9	212	222	296	243		243				243
9 - 10	293	308	319	293		303				303
10 - 11	327	317	359	350		338				338
11 - 12	306	347	386	388		357				357
12 - 1	326	354	405	385		368				368
1 - 2	338	343	396	389		367				367
2 - 3	326	391	372	373		366				366
3 - 4	309	342	350	325		332				332
4 - 5	293	326	341	312		318				318
5 - 6	316	341	317	321		324				324
6 - 7	267	273	268	299		277				277
7 - 8	174	223	196	213		202				202
8 - 9	148	154	167	166		159				159
9 - 10	136	117	143	158		139				139
10 - 11	87	110	88	114		100				100
11 - 12	33	38	54	45		43				43
TOTALS :	4347	4663	4913	4881	33	4705				**4705**
% Avg Day :	92%	99%	104%	104%	7%	100%				

AM (12am-10am) Peak Volumes

15 Minute :	89	83	91	93	6	87				87
One Hour :	293	308	319	299	17	303				303
P.H.F. :	0.82	0.93	0.88	0.80	0.71	0.87				0.87
PH Begins :	9:00am	9:00am	9:00am	8:45am	12:00am	9:00am				9:00am

Mid (10am-2pm) Peak Volumes

15 Minute :	96	103	124	119		106				106
One Hour :	341	374	428	424		379				379
P.H.F. :	0.94	0.91	0.86	0.89		0.89				0.89
PH Begins :	11:45am	10:45am	11:30am	11:45am		11:30am				11:30am

PM (2pm-12am) Peak Volumes

15 Minute :	95	107	112	110		98				98
One Hour :	338	391	372	373		367				367
P.H.F. :	0.89	0.91	0.83	0.85		0.94				0.94
PH Begins :	4:30pm	2:00pm	2:00pm	2:00pm		2:00pm				2:00pm

McDonalds

Weekly 24 Hour Volume Report: WASHINGTON MC D

Info Line 1 :
Info Line 2 :
GPS Lat/Lon :

Last Connected Device Type : Apollo
Serial Number : 89894
Lanes : 2

Lane #1 Weekly 24 Hour Volume Data 05/28/2012 to 06/03/2012

Time	05/28 MON	05/29 TUE	05/30 WED	05/31 THU	06/01 FRI	Weekday Average	06/02 SAT	06/03 SUN	Weekend Average	Week Average
12 - 1							66	58	62	62
1 - 2							31	23	27	27
2 - 3					3	12	27	19	23	22
3 - 4					13	13	12	19	16	15
4 - 5					14	14	12	5	9	10
5 - 6					48	48	21	10	16	26
6 - 7					84	84	51	42	47	59
7 - 8					194	194	138	75	107	136
8 - 9					305	305	219	164	192	229
9 - 10					329	329	302	214	258	282
10 - 11					363	363	413	263	338	346
11 - 12					470	470	443	302	373	405
12 - 1					559	559	503	352	428	471
1 - 2					478	478	477	322	400	426
2 - 3					478	478	423	318	371	406
3 - 4					474	474	352	306	329	377
4 - 5					509	509	359	299	329	389
5 - 6					569	569	379	284	332	411
6 - 7					463	463	365	277	321	368
7 - 8					372	372	281	193	237	282
8 - 9					289	289	243	205	224	246
9 - 10					245	245	206	150	178	200
10 - 11					148	148	132	129	131	136
11 - 12					124	124	100	27	64	84
TOTALS :					6531	6540	5555	4056	4812	**5415**
% Avg Day :					136%	132%	103%	75%	89%	

AM (12am-10am) Peak Volumes

15 Minute :	118	118	83	72	75	82
One Hour :	358	358	302	214	259	281
P.H.F. :	0.76	0.76	0.91	0.74	0.86	0.86
PH Begins :	8:45am	8:45am	9:00am	9:00am	9:00am	8:45am

Mid (10am-2pm) Peak Volumes

15 Minute :	158	158	142	99	117	131
One Hour :	559	559	510	360	428	472
P.H.F. :	0.88	0.88	0.90	0.91	0.91	0.90
PH Begins :	12:00pm	12:00pm	12:30pm	12:45pm	12:00pm	12:00pm

PM (2pm-12am) Peak Volumes

15 Minute :	157	157	112	96	97	108
One Hour :	569	569	423	318	372	411
P.H.F. :	0.91	0.91	0.94	0.94	0.96	0.95
PH Begins :	5:00pm	5:00pm	2:00pm	2:00pm	2:00pm	5:00pm

Lane #1 Weekly 24 Hour Volume Data 06/04/2012 to 06/10/2012

Time	06/04 MON	06/05 TUE	06/06 WED	06/07 THU	06/08 FRI	Weekday Average	06/09 SAT	06/10 SUN	Weekend Average	Week Average
12 - 1	25	19	31	30		26				26
1 - 2	16	13	26	13		18				18
2 - 3	7	5	14			9				9
3 - 4	10	15	10			12				12
4 - 5	13	13	21			16				16
5 - 6	22	30	23			25				25
6 - 7	72	61	60			64				64
7 - 8	140	145	147			144				144
8 - 9	217	210	265			231				231
9 - 10	309	294	298			300				300
10 - 11	313	380	294			329				329
11 - 12	374	418	374			389				389
12 - 1	443	455	442			447				447
1 - 2	421	450	442			438				438
2 - 3	428	379	434			414				414
3 - 4	414	412	428			418				418
4 - 5	425	496	505			475				475
5 - 6	509	424	527			487				487
6 - 7	415	433	418			422				422
7 - 8	306	285	294			295				295
8 - 9	230	217	216			221				221
9 - 10	132	146	162			147				147
10 - 11	92	83	105			93				93
11 - 12	32	42	48			41				41
TOTALS :	5365	5425	5584	43		5461				**5461**
% Avg Day :	98%	99%	102%	11%		100%				

AM (12am-10am) Peak Volumes

15 Minute :	87	98	87	17	85	85
One Hour :	309	294	298	30	300	300
P.H.F. :	0.89	0.75	0.86	0.44	0.88	0.88
PH Begins :	9:00am	9:00am	9:00am	12:00am	9:00am	9:00am

Mid (10am-2pm) Peak Volumes

15 Minute :	129	137	125	128	128
One Hour :	457	486	450	457	457
P.H.F. :	0.89	0.89	0.95	0.89	0.89
PH Begins :	12:15pm	12:30pm	12:15pm	12:15pm	12:15pm

PM (2pm-12am) Peak Volumes

15 Minute :	150	134	160	139	139
One Hour :	509	496	527	486	486
P.H.F. :	0.85	0.93	0.82	0.87	0.87
PH Begins :	5:00pm	4:00pm	5:00pm	5:00pm	5:00pm

Lane #2 Weekly 24 Hour Volume Data 05/28/2012 to 06/03/2012

Time	05/28 MON	05/29 TUE	05/30 WED	05/31 THU	06/01 FRI	Weekday Average	06/02 SAT	06/03 SUN	Weekend Average	Week Average
12 - 1							44	40	42	42
1 - 2							28	22	25	25
2 - 3					1	4	23	18	21	19
3 - 4					25	25	15	11	13	17
4 - 5					34	34	16	15	16	22
5 - 6					91	91	33	16	25	47
6 - 7					171	171	75	53	64	100
7 - 8					183	183	124	58	91	122
8 - 9					232	232	230	100	165	187
9 - 10					326	326	294	179	237	266
10 - 11					367	367	322	223	273	304
11 - 12					371	371	366	245	306	327
12 - 1					402	402	413	339	376	385
1 - 2					400	400	401	376	389	392
2 - 3					409	409	387	278	333	358
3 - 4					355	355	370	275	323	333
4 - 5					348	348	292	239	266	293
5 - 6					375	375	290	242	266	302
6 - 7					315	315	298	212	255	275
7 - 8					259	259	225	161	193	215
8 - 9					205	205	239	166	203	203
9 - 10					189	189	198	103	151	163
10 - 11					124	124	117	86	102	109
11 - 12					42	42	59	35	47	45
TOTALS :					5224	5227	4859	3492	4182	**4551**
% Avg Day :					130%	125%	107%	77%	92%	
AM (12am-10am) Peak Volumes										
15 Minute :					90	90	82	51	61	71
One Hour :					326	326	294	179	237	267
P.H.F. :					0.91	0.91	0.90	0.88	0.97	0.94
PH Begins :					9:00am	9:00am	8:45am	9:00am	9:00am	9:00am
Mid (10am-2pm) Peak Volumes										
15 Minute :					121	121	116	108	112	115
One Hour :					409	409	416	376	393	397
P.H.F. :					0.85	0.85	0.90	0.87	0.88	0.86
PH Begins :					12:30pm	12:30pm	12:45pm	1:00pm	12:30pm	12:30pm
PM (2pm-12am) Peak Volumes										
15 Minute :					108	108	117	82	87	93
One Hour :					409	409	387	285	334	358
P.H.F. :					0.96	0.96	0.83	0.87	0.96	0.96
PH Begins :					2:00pm	2:00pm	2:00pm	2:15pm	2:15pm	2:00pm

Lane #2 Weekly 24 Hour Volume Data 06/04/2012 to 06/10/2012

Time	06/04 MON	06/05 TUE	06/06 WED	06/07 THU	06/08 FRI	Weekday Average	06/09 SAT	06/10 SUN	Weekend Average	Week Average
12 - 1	16	14	23	16		17				17
1 - 2	12	12	18	8		13				13
2 - 3	23	16	14			18				18
3 - 4	19	21	21			20				20
4 - 5	36	35	42			38				38
5 - 6	88	88	101			92				92
6 - 7	170	175	190			178				178
7 - 8	201	192	192			195				195
8 - 9	229	214	211			218				218
9 - 10	282	261	281			275				275
10 - 11	344	355	280			326				326
11 - 12	319	402	331			351				351
12 - 1	370	416	393			393				393
1 - 2	377	339	382			366				366
2 - 3	345	343	361			350				350
3 - 4	318	327	328			324				324
4 - 5	336	359	335			343				343
5 - 6	304	319	343			322				322
6 - 7	258	274	266			266				266
7 - 8	221	185	213			206				206
8 - 9	164	142	199			168				168
9 - 10	123	108	139			123				123
10 - 11	47	52	56			52				52
11 - 12	22	22	42			29				29
TOTALS :	4624	4671	4761	24		4683				**4683**
% Avg Day :	99%	100%	102%	7%		100%				

AM (12am-10am) Peak Volumes

15 Minute :	80	78	79	10	77	77
One Hour :	282	261	281	16	275	275
P.H.F. :	0.88	0.84	0.89	0.40	0.89	0.89
PH Begins :	9:00am	9:00am	9:00am	12:00am	9:00am	9:00am

Mid (10am-2pm) Peak Volumes

15 Minute :	103	125	108		112	112
One Hour :	384	430	393		394	394
P.H.F. :	0.93	0.86	0.91		0.88	0.88
PH Begins :	12:45pm	11:30am	12:00pm		11:30am	11:30am

PM (2pm-12am) Peak Volumes

15 Minute :	96	100	104		99	99
One Hour :	345	369	364		350	350
P.H.F. :	0.90	0.92	0.98		0.88	0.88
PH Begins :	2:00pm	4:15pm	2:30pm		2:00pm	2:00pm

Weekly 24 Hour Volume Report: WASHINGTONMOTEL

Info Line 1 :
Info Line 2 :
GPS Lat/Lon :

Last Connected Device Type : Apollo
Serial Number : 90552
Lanes : 2

Lane #1 Weekly 24 Hour Volume Data 05/28/2012 to 06/03/2012

Time	05/28 MON	05/29 TUE	05/30 WED	05/31 THU	06/01 FRI	Weekday Average	06/02 SAT	06/03 SUN	Weekend Average	Week Average
12 - 1							41	35	38	38
1 - 2							30	32	31	31
2 - 3							23	13	18	18
3 - 4					15	20	11	13	12	14
4 - 5					32	32	14	13	14	20
5 - 6					72	72	28	15	22	38
6 - 7					178	178	71	44	58	98
7 - 8					204	204	139	59	99	134
8 - 9					268	268	225	111	168	201
9 - 10					367	367	346	182	264	298
10 - 11					427	427	370	269	320	355
11 - 12					449	449	433	292	363	391
12 - 1					467	467	457	420	439	448
1 - 2					461	461	474	386	430	440
2 - 3					471	471	475	301	388	416
3 - 4					437	437	405	312	359	385
4 - 5					406	406	389	301	345	365
5 - 6					460	460	336	280	308	359
6 - 7					352	352	321	247	284	307
7 - 8					312	312	273	212	243	266
8 - 9					261	261	294	198	246	251
9 - 10					248	248	218	132	175	199
10 - 11					148	148	151	86	119	128
11 - 12					47	47	74	35	55	52
TOTALS :					6082	6087	5598	3988	4798	**5252**
% Avg Day :					134%	132%	107%	76%	91%	
AM (12am-10am) Peak Volumes										
15 Minute :					100	100	94	53	69	79
One Hour :					367	367	346	182	265	298
P.H.F. :					0.92	0.92	0.92	0.86	0.96	0.94
PH Begins :					9:00am	9:00am	9:00am	9:00am	9:00am	9:00am
Mid (10am-2pm) Peak Volumes										
15 Minute :					134	134	130	131	122	125
One Hour :					471	471	477	461	470	464
P.H.F. :					0.90	0.90	0.92	0.88	0.96	0.93
PH Begins :					11:30am	11:30am	12:30pm	12:30pm	12:30pm	12:30pm
PM (2pm-12am) Peak Volumes										
15 Minute :					136	136	136	89	104	109
One Hour :					477	477	476	316	390	416
P.H.F. :					0.88	0.88	0.88	0.96	0.94	0.95
PH Begins :					4:30pm	4:30pm	2:15pm	3:45pm	2:15pm	2:00pm

Lane #1 Weekly 24 Hour Volume Data 06/04/2012 to 06/10/2012

Time	06/04 MON	06/05 TUE	06/06 WED	06/07 THU	06/08 FRI	Weekday Average	06/09 SAT	06/10 SUN	Weekend Average	Week Average
12 - 1	26	12	16	23		19				19
1 - 2	7	14	15	3		12				12
2 - 3	21	14	11			15				15
3 - 4	17	17	19			18				18
4 - 5	32	34	39			35				35
5 - 6	72	64	86			74				74
6 - 7	169	178	173			173				173
7 - 8	211	217	209			212				212
8 - 9	253	249	230			244				244
9 - 10	321	323	308			317				317
10 - 11	407	399	320			375				375
11 - 12	365	434	395			398				398
12 - 1	423	497	487			469				469
1 - 2	425	422	425			424				424
2 - 3	422	374	401			399				399
3 - 4	366	377	392			378				378
4 - 5	377	410	402			396				396
5 - 6	405	399	413			406				406
6 - 7	314	330	333			326				326
7 - 8	311	251	277			280				280
8 - 9	222	160	232			205				205
9 - 10	150	146	210			169				169
10 - 11	68	93	72			78				78
11 - 12	29	31	30			30				30
TOTALS :	5413	5445	5495	26		5452				**5452**
% Avg Day :	99%	100%	101%	9%		100%				

AM (12am-10am) Peak Volumes

15 Minute :	84	87	84	14	84	84
One Hour :	321	323	308	23	317	317
P.H.F. :	0.96	0.93	0.92	0.41	0.94	0.94
PH Begins :	9:00am	9:00am	9:00am	12:00am	9:00am	9:00am

Mid (10am-2pm) Peak Volumes

15 Minute :	124	148	148		140	140
One Hour :	448	497	487		470	470
P.H.F. :	0.90	0.84	0.82		0.84	0.84
PH Begins :	12:15pm	12:00pm	12:00pm		12:15pm	12:15pm

PM (2pm-12am) Peak Volumes

15 Minute :	118	124	118		117	117
One Hour :	422	430	442		419	419
P.H.F. :	0.96	0.87	0.98		0.90	0.90
PH Begins :	2:00pm	4:30pm	4:45pm		4:30pm	4:30pm

Lane #2 Weekly 24 Hour Volume Data 05/28/2012 to 06/03/2012

Time	05/28 MON	05/29 TUE	05/30 WED	05/31 THU	06/01 FRI	Weekday Average	06/02 SAT	06/03 SUN	Weekend Average	Week Average
12 - 1							66	53	60	60
1 - 2							31	24	28	28
2 - 3							19	18	19	19
3 - 4					8	11	12	17	15	13
4 - 5					11	11	11	5	8	9
5 - 6					30	30	11	7	9	16
6 - 7					61	61	34	28	31	41
7 - 8					153	153	109	52	81	105
8 - 9					291	291	188	122	155	200
9 - 10					335	335	285	184	235	268
10 - 11					377	377	414	238	326	343
11 - 12					431	431	440	249	345	373
12 - 1					531	531	483	296	390	437
1 - 2					500	500	472	301	387	424
2 - 3					470	470	420	292	356	394
3 - 4					473	473	372	317	345	387
4 - 5					499	499	376	265	321	380
5 - 6					534	534	360	290	325	395
6 - 7					455	455	367	235	301	352
7 - 8					350	350	276	207	242	278
8 - 9					282	282	217	179	198	226
9 - 10					260	260	195	131	163	195
10 - 11					143	143	139	87	113	123
11 - 12					106	106	90	43	67	80
TOTALS :					6300	6303	5387	3640	4520	**5146**
% Avg Day :					142%	140%	105%	71%	88%	
AM (12am-10am) Peak Volumes										
15 Minute :					90	90	85	48	65	72
One Hour :					337	337	285	184	236	268
P.H.F. :					0.94	0.94	0.84	0.96	0.91	0.93
PH Begins :					8:45am	8:45am	9:00am	9:00am	9:00am	9:00am
Mid (10am-2pm) Peak Volumes										
15 Minute :					146	146	144	87	106	114
One Hour :					537	537	496	314	405	447
P.H.F. :					0.92	0.92	0.86	0.90	0.96	0.98
PH Begins :					12:15pm	12:15pm	12:45pm	12:15pm	12:15pm	12:15pm
PM (2pm-12am) Peak Volumes										
15 Minute :					155	155	126	87	95	110
One Hour :					543	543	420	317	356	398
P.H.F. :					0.88	0.88	0.83	0.91	0.94	0.90
PH Begins :					5:15pm	5:15pm	2:00pm	3:00pm	2:00pm	4:30pm

Lane #2 Weekly 24 Hour Volume Data 06/04/2012 to 06/10/2012

Time	06/04 MON	06/05 TUE	06/06 WED	06/07 THU	06/08 FRI	Weekday Average	06/09 SAT	06/10 SUN	Weekend Average	Week Average
12 - 1	26	19	27	29		25				25
1 - 2	11	14	24	1		15				15
2 - 3	9	4	12			8				8
3 - 4	9	13	10			11				11
4 - 5	12	12	21			15				15
5 - 6	14	20	21			18				18
6 - 7	55	55	47			52				52
7 - 8	112	115	122			116				116
8 - 9	201	192	231			208				208
9 - 10	300	287	294			294				294
10 - 11	340	405	309			351				351
11 - 12	394	388	356			379				379
12 - 1	424	425	446			432				432
1 - 2	410	481	469			453				453
2 - 3	432	395	440			422				422
3 - 4	408	422	415			415				415
4 - 5	456	494	490			480				480
5 - 6	488	427	497			471				471
6 - 7	434	430	446			437				437
7 - 8	311	283	281			292				292
8 - 9	226	202	234			221				221
9 - 10	159	161	151			157				157
10 - 11	106	81	109			99				99
11 - 12	34	47	58			46				46
TOTALS :	5371	5372	5510	30		5417				**5417**
% Avg Day :	99%	99%	102%	11%		100%				

AM (12am-10am) Peak Volumes

15 Minute :	89	79	82	11	77	77
One Hour :	300	287	294	29	294	294
P.H.F. :	0.84	0.91	0.90	0.66	0.95	0.95
PH Begins :	9:00am	9:00am	9:00am	12:00am	9:00am	9:00am

Mid (10am-2pm) Peak Volumes

15 Minute :	115	140	132		124	124
One Hour :	439	504	483		466	466
P.H.F. :	0.95	0.90	0.91		0.94	0.94
PH Begins :	12:30pm	12:45pm	12:45pm		12:45pm	12:45pm

PM (2pm-12am) Peak Volumes

15 Minute :	133	143	139		127	127
One Hour :	500	505	526		490	490
P.H.F. :	0.94	0.88	0.95		0.96	0.96
PH Begins :	5:15pm	4:15pm	4:30pm		4:30pm	4:30pm

Weekly 24 Hour Volume Report: 1000BLOCK JOHNS

Info Line 1 :
Info Line 2 :
GPS Lat/Lon :

Last Connected Device Type : Apollo
Serial Number : 90552
Lanes : 2

Lane #1 Weekly 24 Hour Volume Data 09/24/2012 to 09/30/2012

Time	09/24 MON	09/25 TUE	09/26 WED	09/27 THU	09/28 FRI	Weekday Average	09/29 SAT	09/30 SUN	Weekend Average	Week Average
12 - 1					16	16	13	28	21	19
1 - 2					5	5	13	27	20	15
2 - 3					2	2	9	16	13	9
3 - 4					6	6	5	5	5	5
4 - 5					5	5	4	2	3	4
5 - 6					12	12	9	4	7	8
6 - 7					29	29	18	16	17	21
7 - 8					88	88	34	19	27	47
8 - 9					108	108	63	56	60	76
9 - 10					144	144	125	112	119	127
10 - 11					126	126	148	115	132	130
11 - 12					159	159	139	129	134	142
12 - 1					183	183	183	136	160	167
1 - 2					190	190	162	144	153	165
2 - 3					180	180	179	132	156	164
3 - 4					213	213	197	151	174	187
4 - 5					217	217	203	131	167	184
5 - 6					220	220	162	133	148	172
6 - 7					221	221	155	129	142	168
7 - 8					159	159	118	117	118	131
8 - 9				87	103	109	138	101	120	114
9 - 10				76	89	83	86	53	70	76
10 - 11				46	58	52	47	27	37	45
11 - 12				18	32	25	33	17	25	25
TOTALS :				227	2565	2552	2243	1800	2028	**2201**
% Avg Day :				66%	117%	116%	102%	82%	92%	
AM (12am-10am) Peak Volumes										
15 Minute :					41	41	36	46	38	39
One Hour :					146	146	125	112	120	127
P.H.F. :					0.89	0.89	0.87	0.61	0.79	0.81
PH Begins :					8:45am	8:45am	9:00am	8:45am	9:00am	9:00am
Mid (10am-2pm) Peak Volumes										
15 Minute :					59	59	53	43	46	46
One Hour :					196	196	183	152	161	169
P.H.F. :					0.83	0.83	0.86	0.88	0.88	0.92
PH Begins :					12:15pm	12:15pm	12:00pm	12:30pm	12:00pm	12:15pm
PM (2pm-12am) Peak Volumes										
15 Minute :				37	62	62	60	46	51	54
One Hour :				112	237	237	207	155	175	187
P.H.F. :				0.76	0.97	0.97	0.86	0.84	0.86	0.92
PH Begins :				8:15pm	5:45pm	5:45pm	4:30pm	3:15pm	2:45pm	3:00pm

Lane #1 Weekly 24 Hour Volume Data 10/01/2012 to 10/07/2012

Time	10/01 MON	10/02 TUE	10/03 WED	10/04 THU	10/05 FRI	Weekday Average	10/06 SAT	10/07 SUN	Weekend Average	Week Average
12 - 1	12	11	9	8	12	10	28	13	21	13
1 - 2	4	6	7	4	9	6	9	7	8	7
2 - 3	3	2	1	6	5	3	10	6	8	5
3 - 4	4	5	3	4	3	4	4	7	6	4
4 - 5	8	7	2	2	1	4	2	5	4	4
5 - 6	7	10	9	9	9	9	6	4	5	8
6 - 7	27	24	31	30	23	27	12	16	14	23
7 - 8	98	100	101	52	52	81	33	19	26	65
8 - 9	110	120	112	79	71	98	72	43	58	87
9 - 10	132	124	133	92	100	116	108	74	91	109
10 - 11	118	112	126	114	148	124	126	100	113	121
11 - 12	168	153	187	152	181	168	176	125	151	163
12 - 1	172	169	189	177	174	176	168	123	146	167
1 - 2	172	177	208	171	183	182	158	144	151	173
2 - 3	169	195	190	167	198	184	161	139	150	174
3 - 4	240	229	223	177	191	212	184	134	159	197
4 - 5	196	244	201	191	202	207	153	141	147	190
5 - 6	237	264	221	218	251	238	166	159	163	217
6 - 7	223	233	213	196	201	213	149	128	139	192
7 - 8	166	188	158	161	152	165	134	112	123	153
8 - 9	108	126	116	108	121	116	97	85	91	109
9 - 10	105	77	80	90	71	85	84	64	74	82
10 - 11	36	46	45	56	68	50	62	27	45	49
11 - 12	18	15	16	25	34	22	29	16	23	22
TOTALS :	2533	2637	2581	2289	2460	2500	2131	1691	1916	**2334**
% Avg Day :	109%	113%	111%	98%	105%	107%	91%	72%	82%	

AM (12am-10am) Peak Volumes										
15 Minute :	44	40	41	34	32	37	36	27	32	33
One Hour :	140	132	146	92	100	120	108	74	93	109
P.H.F. :	0.80	0.82	0.89	0.72	0.78	0.81	0.75	0.69	0.73	0.83
PH Begins :	8:30am	8:15am	8:45am	9:00am	9:00am	8:45am	9:00am	9:00am	9:00am	8:45am
Mid (10am-2pm) Peak Volumes										
15 Minute :	54	52	64	53	58	53	54	41	46	48
One Hour :	183	187	215	191	200	190	186	144	155	176
P.H.F. :	0.85	0.90	0.85	0.90	0.86	0.95	0.86	0.88	0.84	0.92
PH Begins :	11:30am	12:45pm	12:30pm	12:30pm	11:30am	12:45pm	11:45am	1:00pm	12:30pm	12:30pm
PM (2pm-12am) Peak Volumes										
15 Minute :	84	80	69	64	75	69	54	48	51	61
One Hour :	253	272	247	227	251	249	184	159	164	223
P.H.F. :	0.82	0.85	0.89	0.89	0.95	0.90	0.85	0.92	0.80	0.91
PH Begins :	5:45pm	5:30pm	5:30pm	5:30pm	5:00pm	5:30pm	3:00pm	5:00pm	2:30pm	5:30pm

Lane #1 Weekly 24 Hour Volume Data 10/08/2012 to 10/14/2012

Time	10/08 MON	10/09 TUE	10/10 WED	10/11 THU	10/12 FRI	Weekday Average	10/13 SAT	10/14 SUN	Weekend Average	Week Average
12 - 1	12	9				11				11
1 - 2	3	5				4				4
2 - 3	2	5				4				4
3 - 4	0	1				1				1
4 - 5	7	5				6				6
5 - 6	9	11				10				10
6 - 7	18	27				23				23
7 - 8	92	89				91				91
8 - 9	84	49				76				76
9 - 10	119					119				119
10 - 11	131					131				131
11 - 12	122					122				122
12 - 1	180					180				180
1 - 2	149					149				149
2 - 3	150					150				150
3 - 4	206					206				206
4 - 5	214					214				214
5 - 6	213					213				213
6 - 7	189					189				189
7 - 8	132					132				132
8 - 9	98					98				98
9 - 10	55					55				55
10 - 11	35					35				35
11 - 12	24					24				24
TOTALS :	2244	201				2243				**2243**
% Avg Day :	100%	25%				100%				

AM (12am-10am) Peak Volumes

15 Minute :	40	36				40				40
One Hour :	121	100				121				121
P.H.F. :	0.76	0.69				0.76				0.76
PH Begins :	8:45am	7:15am				8:45am				8:45am

Mid (10am-2pm) Peak Volumes

15 Minute :	49					49				49
One Hour :	180					180				180
P.H.F. :	0.92					0.92				0.92
PH Begins :	12:00pm					12:00pm				12:00pm

PM (2pm-12am) Peak Volumes

15 Minute :	75					75				75
One Hour :	232					232				232
P.H.F. :	0.77					0.77				0.77
PH Begins :	3:15pm					3:15pm				3:15pm

Lane #2 Weekly 24 Hour Volume Data 09/24/2012 to 09/30/2012

Time	09/24 MON	09/25 TUE	09/26 WED	09/27 THU	09/28 FRI	Weekday Average	09/29 SAT	09/30 SUN	Weekend Average	Week Average
12 - 1					9	9	15	11	13	12
1 - 2					1	1	5	14	10	7
2 - 3					4	4	5	8	7	6
3 - 4					10	10	9	8	9	9
4 - 5					7	7	3	6	5	5
5 - 6					50	50	18	11	15	26
6 - 7					80	80	33	19	26	44
7 - 8					144	144	31	33	32	69
8 - 9					100	100	80	45	63	75
9 - 10					135	135	139	72	106	115
10 - 11					155	155	194	126	160	158
11 - 12					175	175	158	128	143	154
12 - 1					168	168	173	178	176	173
1 - 2					178	178	166	123	145	156
2 - 3					172	172	184	135	160	164
3 - 4					212	212	152	109	131	158
4 - 5					193	193	153	102	128	149
5 - 6					195	195	127	126	127	149
6 - 7					145	145	114	109	112	123
7 - 8					107	107	115	95	105	106
8 - 9				61	97	90	94	93	94	92
9 - 10				54	76	65	63	44	54	59
10 - 11				26	57	42	37	22	30	36
11 - 12				21	28	25	27	15	21	23
TOTALS :				162	2498	2462	2095	1632	1872	**2068**
% Avg Day :				50%	121%	119%	101%	79%	91%	
AM (12am-10am) Peak Volumes										
15 Minute :					52	52	40	22	31	30
One Hour :					148	148	139	72	107	115
P.H.F. :					0.71	0.71	0.87	0.82	0.86	0.96
PH Begins :					7:30am	7:30am	9:00am	9:00am	9:00am	9:00am
Mid (10am-2pm) Peak Volumes										
15 Minute :					52	52	56	51	50	46
One Hour :					182	182	194	178	178	173
P.H.F. :					0.97	0.97	0.93	0.87	0.89	0.94
PH Begins :					12:30pm	12:30pm	10:00am	12:00pm	11:45am	11:45am
PM (2pm-12am) Peak Volumes										
15 Minute :				24	58	58	52	47	46	47
One Hour :				73	216	216	184	137	161	171
P.H.F. :				0.76	0.93	0.93	0.88	0.73	0.88	0.91
PH Begins :				8:15pm	2:45pm	2:45pm	2:00pm	2:45pm	2:00pm	2:45pm

Lane #2 Weekly 24 Hour Volume Data 10/01/2012 to 10/07/2012

Time	10/01 MON	10/02 TUE	10/03 WED	10/04 THU	10/05 FRI	Weekday Average	10/06 SAT	10/07 SUN	Weekend Average	Week Average
12 - 1	7	5	2	10	8	6	21	14	18	10
1 - 2	2	2	2	5	5	3	6	10	8	5
2 - 3	5	4	4	4	2	4	4	3	4	4
3 - 4	7	7	8	7	5	7	4	5	5	6
4 - 5	16	15	11	9	6	11	6	5	6	10
5 - 6	49	45	49	47	34	45	16	10	13	36
6 - 7	72	88	71	87	77	79	20	19	20	62
7 - 8	132	160	152	88	84	123	34	22	28	96
8 - 9	147	112	119	98	80	111	83	51	67	99
9 - 10	155	122	132	114	137	132	114	79	97	122
10 - 11	145	157	162	142	143	150	162	117	140	147
11 - 12	193	164	180	176	176	178	159	134	147	169
12 - 1	199	200	190	163	158	182	168	161	165	177
1 - 2	191	161	208	167	174	180	151	159	155	173
2 - 3	191	159	210	152	192	181	187	119	153	173
3 - 4	228	179	186	176	187	191	159	111	135	175
4 - 5	194	208	173	189	204	194	172	125	149	181
5 - 6	197	244	210	181	196	206	142	112	127	183
6 - 7	170	164	156	149	124	153	136	125	131	146
7 - 8	150	166	105	121	124	133	87	98	93	122
8 - 9	79	90	88	66	105	86	78	78	78	83
9 - 10	61	57	66	70	52	61	46	55	51	58
10 - 11	25	26	33	45	42	34	33	16	25	31
11 - 12	14	19	9	21	30	19	26	11	19	19
TOTALS :	2629	2554	2526	2287	2345	2469	2014	1639	1834	**2287**
% Avg Day :	115%	112%	110%	100%	103%	108%	88%	72%	80%	
AM (12am-10am) Peak Volumes										
15 Minute :	44	49	52	32	38	38	44	24	32	35
One Hour :	163	163	153	114	137	131	114	79	97	122
P.H.F. :	0.93	0.83	0.74	0.89	0.90	0.91	0.65	0.82	0.76	0.87
PH Begins :	8:30am	7:15am	7:15am	8:45am	9:00am	9:00am	9:00am	9:00am	9:00am	9:00am
Mid (10am-2pm) Peak Volumes										
15 Minute :	62	60	57	58	50	51	56	53	47	47
One Hour :	215	204	217	186	185	189	181	184	170	178
P.H.F. :	0.87	0.85	0.95	0.80	0.93	0.93	0.94	0.87	0.97	0.95
PH Begins :	11:30am	12:15pm	12:30pm	11:15am	11:30am	11:15am	11:45am	12:30pm	12:15pm	11:45am
PM (2pm-12am) Peak Volumes										
15 Minute :	67	79	69	54	66	60	62	45	42	51
One Hour :	230	251	219	196	219	216	187	126	154	194
P.H.F. :	0.86	0.79	0.79	0.94	0.83	0.90	0.75	0.70	0.92	0.95
PH Begins :	2:45pm	4:45pm	5:15pm	4:30pm	4:15pm	4:45pm	2:00pm	2:45pm	2:00pm	4:45pm

Lane #2 Weekly 24 Hour Volume Data 10/08/2012 to 10/14/2012

Time	10/08 MON	10/09 TUE	10/10 WED	10/11 THU	10/12 FRI	Weekday Average	10/13 SAT	10/14 SUN	Weekend Average	Week Average
12 - 1	5	5				5				5
1 - 2	5	2				4				4
2 - 3	4	6				5				5
3 - 4	3	7				5				5
4 - 5	9	7				8				8
5 - 6	40	54				47				47
6 - 7	63	74				69				69
7 - 8	134	163				149				149
8 - 9	106	62				96				96
9 - 10	134					134				134
10 - 11	112					112				112
11 - 12	149					149				149
12 - 1	164					164				164
1 - 2	139					139				139
2 - 3	143					143				143
3 - 4	199					199				199
4 - 5	156					156				156
5 - 6	161					161				161
6 - 7	141					141				141
7 - 8	124					124				124
8 - 9	76					76				76
9 - 10	48					48				48
10 - 11	25					25				25
11 - 12	16					16				16
TOTALS :	2156	380				2175				**2175**
% Avg Day :	99%	48%				100%				

	AM (12am-10am) Peak Volumes			
15 Minute :	47	52	50	50
One Hour :	135	163	150	150
P.H.F. :	0.72	0.78	0.75	0.75
PH Begins :	7:15am	7:00am	7:00am	7:00am
	Mid (10am-2pm) Peak Volumes			
15 Minute :	45		45	45
One Hour :	164		164	164
P.H.F. :	0.91		0.91	0.91
PH Begins :	12:00pm		12:00pm	12:00pm
	PM (2pm-12am) Peak Volumes			
15 Minute :	70		70	70
One Hour :	199		199	199
P.H.F. :	0.71		0.71	0.71
PH Begins :	3:00pm		3:00pm	3:00pm

Weekly 24 Hour Volume Report: 2ND BOISE BRIDG

Info Line 1 :
Info Line 2 :
GPS Lat/Lon :

Last Connected Device Type : Apollo
Serial Number : 89892
Lanes : 2

Lane #1 Weekly 24 Hour Volume Data 09/03/2012 to 09/09/2012

Time	09/03 MON	09/04 TUE	09/05 WED	09/06 THU	09/07 FRI	Weekday Average	09/08 SAT	09/09 SUN	Weekend Average	Week Average
12 - 1					0	0	1	0	1	0
1 - 2					1	1	2	3	3	2
2 - 3					0	0	1	1	1	1
3 - 4					0	0	1	1	1	1
4 - 5					1	1	0	0	0	0
5 - 6					1	1	0	0	0	0
6 - 7					2	2	1	2	2	2
7 - 8					2	2	1	2	2	2
8 - 9					0	0	2	2	2	1
9 - 10					4	4	10	3	7	6
10 - 11					2	2	6	6	6	5
11 - 12					3	3	10	11	11	8
12 - 1					10	10	10	15	13	12
1 - 2				4	4	5	17	7	12	9
2 - 3				11	7	9	7	16	12	10
3 - 4				13	13	13	13	4	9	11
4 - 5				14	18	16	12	7	10	13
5 - 6				20	17	19	7	8	8	13
6 - 7				10	19	15	4	6	5	10
7 - 8				8	17	13	7	3	5	9
8 - 9				6	6	6	11	3	7	7
9 - 10				5	4	5	5	5	5	5
10 - 11				2	3	3	1	1	1	2
11 - 12				2	1	2	1	0	1	1
TOTALS :				95	135	132	130	106	124	**130**
% Avg Day :				163%	104%	102%	100%	82%	95%	

AM (12am-10am) Peak Volumes

15 Minute :					3	3	4	2	3	2
One Hour :					4	4	10	4	7	6
P.H.F. :					0.33	0.33	0.63	0.50	0.58	0.75
PH Begins :					8:45am	8:45am	9:00am	7:45am	9:00am	9:00am

Mid (10am-2pm) Peak Volumes

15 Minute :				2	4	4	8	5	5	4
One Hour :				4	10	10	17	17	15	11
P.H.F. :				0.50	0.63	0.63	0.53	0.85	0.75	0.69
PH Begins :				1:00pm	12:00pm	12:00pm	1:00pm	11:45am	11:45am	11:45am

PM (2pm-12am) Peak Volumes

15 Minute :				9	11	8	7	6	5	5
One Hour :				20	25	21	19	16	14	15
P.H.F. :				0.83	0.69	0.66	0.68	0.67	0.70	0.75
PH Begins :				4:45pm	5:45pm	3:30pm	4:30pm	2:00pm	2:30pm	3:45pm

Lane #1 Weekly 24 Hour Volume Data 09/10/2012 to 09/16/2012

Time	09/10 MON	09/11 TUE	09/12 WED	09/13 THU	09/14 FRI	Weekday Average	09/15 SAT	09/16 SUN	Weekend Average	Week Average
12 - 1	2	3	0	1		2				2
1 - 2	0	0	0	0		0				0
2 - 3	0	0	0	0		0				0
3 - 4	0	0	1	1		1				1
4 - 5	0	0	1	0		0				0
5 - 6	1	0	0	1		1				1
6 - 7	4	1	1	3		2				2
7 - 8	1	5	0	8		4				4
8 - 9	3	3	3	9		5				5
9 - 10	7	2	3	0		4				4
10 - 11	3	4	6			4				4
11 - 12	10	15	9			11				11
12 - 1	11	6	8			8				8
1 - 2	5	10	8			8				8
2 - 3	8	11	15			11				11
3 - 4	18	15	11			15				15
4 - 5	17	16	8			14				14
5 - 6	9	13	8			10				10
6 - 7	12	14	5			10				10
7 - 8	15	9	11			12				12
8 - 9	9	7	9			8				8
9 - 10	11	10	3			8				8
10 - 11	2	2	2			2				2
11 - 12	2	0	5			2				2
TOTALS :	150	146	117	23		142				**142**
% Avg Day :	106%	103%	82%	42%		100%				

AM (12am-10am) Peak Volumes

15 Minute :	4	3	2	6	2	2
One Hour :	7	5	3	15	6	6
P.H.F. :	0.44	0.42	0.38	0.63	0.75	0.75
PH Begins :	9:00am	7:00am	7:45am	7:30am	7:15am	7:15am

Mid (10am-2pm) Peak Volumes

15 Minute :	5	7	5		5	5
One Hour :	14	16	10		11	11
P.H.F. :	0.70	0.57	0.63		0.55	0.55
PH Begins :	11:45am	11:15am	11:45am		11:00am	11:00am

PM (2pm-12am) Peak Volumes

15 Minute :	9	7	8		7	7
One Hour :	23	16	15		17	17
P.H.F. :	0.72	1.00	0.75		0.61	0.61
PH Begins :	3:30pm	3:15pm	2:00pm		3:30pm	3:30pm

Lane #2 Weekly 24 Hour Volume Data 09/03/2012 to 09/09/2012

Time	09/03 MON	09/04 TUE	09/05 WED	09/06 THU	09/07 FRI	Weekday Average	09/08 SAT	09/09 SUN	Weekend Average	Week Average
12 - 1					0	0	1	0	1	0
1 - 2					0	0	2	0	1	1
2 - 3					0	0	0	0	0	0
3 - 4					0	0	2	0	1	1
4 - 5					3	3	0	0	0	1
5 - 6					0	0	2	0	1	1
6 - 7					4	4	0	1	1	2
7 - 8					3	3	2	0	1	2
8 - 9					8	8	6	4	5	6
9 - 10					3	3	7	2	5	4
10 - 11					4	4	9	8	9	7
11 - 12					4	4	15	9	12	9
12 - 1					8	8	4	12	8	8
1 - 2				8	8	9	8	7	8	8
2 - 3				4	2	3	5	4	5	4
3 - 4				9	8	9	8	1	5	7
4 - 5				7	9	8	10	10	10	9
5 - 6				11	7	9	10	9	10	9
6 - 7				9	7	8	9	6	8	8
7 - 8				9	6	8	8	6	7	7
8 - 9				4	6	5	8	8	8	7
9 - 10				4	5	5	7	1	4	4
10 - 11				1	2	2	3	0	2	2
11 - 12				1	3	2	0	0	0	1
TOTALS :				67	100	105	126	88	112	**108**
% Avg Day :				139%	93%	97%	117%	81%	104%	
AM (12am-10am) Peak Volumes										
15 Minute :					3	3	4	2	2	2
One Hour :					8	8	7	5	5	5
P.H.F. :					0.67	0.67	0.88	0.63	0.63	0.63
PH Begins :					8:00am	8:00am	7:45am	8:15am	7:45am	7:45am
Mid (10am-2pm) Peak Volumes										
15 Minute :				4	4	4	5	5	5	4
One Hour :				8	9	11	15	15	13	12
P.H.F. :				0.50	0.56	0.69	0.75	0.75	0.65	0.75
PH Begins :				12:45pm	12:15pm	12:45pm	11:00am	11:30am	11:00am	11:30am
PM (2pm-12am) Peak Volumes										
15 Minute :				4	4	4	5	4	4	3
One Hour :				12	10	11	15	10	14	10
P.H.F. :				0.75	0.63	0.92	0.75	0.63	0.88	0.83
PH Begins :				6:15pm	8:30pm	4:45pm	4:15pm	4:00pm	4:30pm	4:30pm

Lane #2 Weekly 24 Hour Volume Data 09/10/2012 to 09/16/2012

Time	09/10 MON	09/11 TUE	09/12 WED	09/13 THU	09/14 FRI	Weekday Average	09/15 SAT	09/16 SUN	Weekend Average	Week Average
12 - 1	1	2	1	0		1				1
1 - 2	0	0	0	0		0				0
2 - 3	0	0	0	0		0				0
3 - 4	0	0	1	0		0				0
4 - 5	0	0	1	0		0				0
5 - 6	0	2	2	3		2				2
6 - 7	4	5	0	3		3				3
7 - 8	3	5	4	8		5				5
8 - 9	11	9	6	12		10				10
9 - 10	4	5	5	0		4				4
10 - 11	4	2	4			3				3
11 - 12	11	11	6			9				9
12 - 1	6	4	3			4				4
1 - 2	9	8	3			7				7
2 - 3	4	4	13			7				7
3 - 4	8	17	14			13				13
4 - 5	7	11	11			10				10
5 - 6	9	8	13			10				10
6 - 7	4	11	9			8				8
7 - 8	6	6	7			6				6
8 - 9	7	6	6			6				6
9 - 10	4	4	4			4				4
10 - 11	2	1	2			2				2
11 - 12	0	1	1			1				1
TOTALS :	104	122	116	26		115				**115**
% Avg Day :	90%	106%	101%	58%		100%				

AM (12am-10am) Peak Volumes

15 Minute :	5	4	3	8	3	3
One Hour :	11	9	7	18	10	10
P.H.F. :	0.55	0.75	0.88	0.56	0.83	0.83
PH Begins :	8:00am	8:00am	8:15am	7:30am	7:30am	7:30am

Mid (10am-2pm) Peak Volumes

15 Minute :	6	5	3		3	3
One Hour :	13	11	7		11	11
P.H.F. :	0.54	0.55	0.58		0.92	0.92
PH Begins :	11:15am	11:00am	11:15am		11:15am	11:15am

PM (2pm-12am) Peak Volumes

15 Minute :	6	9	8		4	4
One Hour :	11	17	14		14	14
P.H.F. :	0.46	0.47	0.58		0.88	0.88
PH Begins :	4:30pm	3:00pm	2:45pm		3:00pm	3:00pm

Weekly 24 Hour Volume Report: 4TH A BOISE BRG

Info Line 1 :
Info Line 2 :
GPS Lat/Lon :

Last Connected Device Type : Apollo
Serial Number : 89894
Lanes : 2

Lane #1 Weekly 24 Hour Volume Data 09/03/2012 to 09/09/2012

Time	09/03 MON	09/04 TUE	09/05 WED	09/06 THU	09/07 FRI	Weekday Average	09/08 SAT	09/09 SUN	Weekend Average	Week Average
12 - 1					1	1	4	9	7	5
1 - 2					1	1	3	4	4	3
2 - 3					2	2	3	4	4	3
3 - 4					2	2	2	3	3	2
4 - 5					2	2	3	2	3	2
5 - 6					15	15	3	3	3	7
6 - 7					30	30	11	7	9	16
7 - 8					56	56	17	11	14	28
8 - 9					45	45	24	26	25	32
9 - 10					44	44	39	30	35	38
10 - 11					53	53	40	40	40	44
11 - 12					45	45	49	36	43	43
12 - 1					40	40	45	50	48	45
1 - 2				39	47	43	57	40	49	46
2 - 3				55	52	54	40	41	41	47
3 - 4				66	60	63	46	38	42	53
4 - 5				58	74	66	36	40	38	52
5 - 6				53	65	59	45	37	41	50
6 - 7				61	57	59	47	37	42	51
7 - 8				51	40	46	50	41	46	46
8 - 9				28	49	39	29	32	31	35
9 - 10				22	22	22	25	22	24	23
10 - 11				11	14	13	11	11	11	12
11 - 12				7	13	10	10	2	6	8
TOTALS :				451	829	810	639	566	609	**691**
% Avg Day :				142%	120%	117%	92%	82%	88%	
AM (12am-10am) Peak Volumes										
15 Minute :					18	18	17	14	11	12
One Hour :					56	56	39	33	35	38
P.H.F. :					0.78	0.78	0.57	0.59	0.80	0.79
PH Begins :					7:00am	7:00am	9:00am	8:45am	9:00am	8:15am
Mid (10am-2pm) Peak Volumes										
15 Minute :				13	17	17	20	15	16	15
One Hour :				39	54	54	57	50	51	50
P.H.F. :				0.75	0.79	0.79	0.71	0.83	0.85	0.96
PH Begins :				1:00pm	10:30am	10:30am	10:30am	12:00pm	12:45pm	10:30am
PM (2pm-12am) Peak Volumes										
15 Minute :				25	25	24	19	14	15	17
One Hour :				82	74	74	52	47	48	59
P.H.F. :				0.82	0.88	0.77	0.81	0.98	0.92	0.87
PH Begins :				2:45pm	4:00pm	2:30pm	5:45pm	6:45pm	4:30pm	2:30pm

Lane #1 Weekly 24 Hour Volume Data 09/10/2012 to 09/16/2012

Time	09/10 MON	09/11 TUE	09/12 WED	09/13 THU	09/14 FRI	Weekday Average	09/15 SAT	09/16 SUN	Weekend Average	Week Average
12 - 1	5	4	2	5		4				4
1 - 2	1	1	2	1		1				1
2 - 3	0	0	3	1		1				1
3 - 4	2	1	0	2		1				1
4 - 5	2	1	2	0		1				1
5 - 6	13	13	13	10		12				12
6 - 7	19	18	25	26		22				22
7 - 8	51	60	39	49		50				50
8 - 9	39	35	39	20		33				33
9 - 10	39	43	32			38				38
10 - 11	51	42	40			44				44
11 - 12	43	41	50			45				45
12 - 1	40	45	49			45				45
1 - 2	41	44	47			44				44
2 - 3	47	58	64			56				56
3 - 4	62	61	64			62				62
4 - 5	60	65	47			57				57
5 - 6	45	56	59			53				53
6 - 7	53	38	56			49				49
7 - 8	39	46	37			41				41
8 - 9	32	28	37			32				32
9 - 10	20	17	17			18				18
10 - 11	8	14	12			11				11
11 - 12	5	5	13			8				8
TOTALS :	717	736	749	114		728				**728**
% Avg Day :	98%	101%	103%	42%		100%				

AM (12am-10am) Peak Volumes						
15 Minute :	18	23	18	18	19	19
One Hour :	55	60	44	57	54	54
P.H.F. :	0.76	0.65	0.61	0.79	0.71	0.71
PH Begins :	7:15am	7:00am	7:30am	7:15am	7:15am	7:15am
Mid (10am-2pm) Peak Volumes						
15 Minute :	17	15	19		14	14
One Hour :	51	49	53		49	49
P.H.F. :	0.75	0.88	0.70		0.88	0.88
PH Begins :	10:00am	12:15pm	10:45am		10:30am	10:30am
PM (2pm-12am) Peak Volumes						
15 Minute :	24	24	21		21	21
One Hour :	64	71	64		63	63
P.H.F. :	0.67	0.74	0.76		0.75	0.75
PH Begins :	2:45pm	2:15pm	2:00pm		2:15pm	2:15pm

Lane #2 Weekly 24 Hour Volume Data 09/03/2012 to 09/09/2012

Time	09/03 MON	09/04 TUE	09/05 WED	09/06 THU	09/07 FRI	Weekday Average	09/08 SAT	09/09 SUN	Weekend Average	Week Average
12 - 1					1	1	9	9	9	6
1 - 2					2	2	5	7	6	5
2 - 3					3	3	4	3	4	3
3 - 4					0	0	2	1	2	1
4 - 5					1	1	0	2	1	1
5 - 6					6	6	2	4	3	4
6 - 7					14	14	2	2	2	6
7 - 8					44	44	16	5	11	22
8 - 9					29	29	10	11	11	17
9 - 10					29	29	39	21	30	30
10 - 11					40	40	35	26	31	34
11 - 12					50	50	43	27	35	40
12 - 1					34	34	41	58	50	44
1 - 2				52	53	53	41	37	39	46
2 - 3				46	48	47	57	39	48	48
3 - 4				56	60	58	45	49	47	53
4 - 5				54	59	57	18	43	31	44
5 - 6				75	77	76	49	35	42	59
6 - 7				72	64	68	58	45	52	60
7 - 8				39	46	43	46	43	45	44
8 - 9				38	40	39	39	26	33	36
9 - 10				41	32	37	31	25	28	32
10 - 11				11	19	15	22	14	18	17
11 - 12				10	25	18	18	9	14	16
TOTALS :				494	776	764	632	541	592	**668**
% Avg Day :				161%	116%	114%	95%	81%	89%	
AM (12am-10am) Peak Volumes										
15 Minute :					22	22	12	9	10	10
One Hour :					44	44	39	21	31	29
P.H.F. :					0.50	0.50	0.81	0.58	0.78	0.72
PH Begins :					7:00am	7:00am	9:00am	9:00am	9:00am	9:00am
Mid (10am-2pm) Peak Volumes										
15 Minute :				15	18	18	15	24	18	14
One Hour :				52	53	53	48	63	56	50
P.H.F. :				0.87	0.74	0.95	0.80	0.66	0.78	0.89
PH Begins :				1:00pm	1:00pm	1:00pm	12:45pm	12:15pm	12:15pm	12:45pm
PM (2pm-12am) Peak Volumes										
15 Minute :				26	27	25	19	16	16	17
One Hour :				84	77	77	62	52	52	60
P.H.F. :				0.81	0.71	0.77	0.82	0.93	0.93	0.88
PH Begins :				5:15pm	5:00pm	5:00pm	5:45pm	2:45pm	2:45pm	5:15pm

Lane #2 Weekly 24 Hour Volume Data 09/10/2012 to 09/16/2012

Time	09/10 MON	09/11 TUE	09/12 WED	09/13 THU	09/14 FRI	Weekday Average	09/15 SAT	09/16 SUN	Weekend Average	Week Average
12 - 1	4	3	4	0		3				3
1 - 2	0	1	0	3		1				1
2 - 3	0	0	1	0		0				0
3 - 4	0	1	2	0		1				1
4 - 5	0	0	0	0		0				0
5 - 6	3	7	4	7		5				5
6 - 7	11	11	12	13		12				12
7 - 8	38	46	52	45		45				45
8 - 9	27	25	24	10		22				22
9 - 10	25	29	35			30				30
10 - 11	33	31	29			31				31
11 - 12	35	44	42			40				40
12 - 1	53	47	50			50				50
1 - 2	46	47	50			48				48
2 - 3	58	70	65			64				64
3 - 4	59	57	55			57				57
4 - 5	54	50	57			54				54
5 - 6	76	60	71			69				69
6 - 7	66	64	65			65				65
7 - 8	35	42	43			40				40
8 - 9	34	43	50			42				42
9 - 10	22	32	33			29				29
10 - 11	11	13	15			13				13
11 - 12	6	9	9			8				8
TOTALS :	696	732	768	78		729				**729**
% Avg Day :	95%	100%	105%	29%		100%				

AM (12am-10am) Peak Volumes

15 Minute :	19	22	22	22	21	21
One Hour :	40	47	53	45	45	45
P.H.F. :	0.53	0.53	0.60	0.51	0.54	0.54
PH Begins :	7:15am	7:15am	7:15am	7:00am	7:00am	7:00am

Mid (10am-2pm) Peak Volumes

15 Minute :	18	21	21		17	17
One Hour :	53	54	56		52	52
P.H.F. :	0.74	0.64	0.67		0.76	0.76
PH Begins :	12:00pm	12:45pm	11:15am		12:45pm	12:45pm

PM (2pm-12am) Peak Volumes

15 Minute :	22	21	20		18	18
One Hour :	82	71	71		69	69
P.H.F. :	0.93	0.89	0.93		0.96	0.96
PH Begins :	5:15pm	2:15pm	5:00pm		5:00pm	5:00pm

Weekly 24 Hour Volume Report: 604 E 4TH

Info Line 1 :
Info Line 2 :
GPS Lat/Lon :

Last Connected Device Type : Apollo
Serial Number : 89891
Lanes : 2

Lane #1 Weekly 24 Hour Volume Data 09/03/2012 to 09/09/2012

Time	09/03 MON	09/04 TUE	09/05 WED	09/06 THU	09/07 FRI	Weekday Average	09/08 SAT	09/09 SUN	Weekend Average	Week Average
12 - 1					2	2	6	3	5	4
1 - 2					1	1	2	5	4	3
2 - 3					0	0	5	1	3	2
3 - 4					2	2	0	2	1	1
4 - 5					4	4	1	1	1	2
5 - 6					4	4	2	0	1	2
6 - 7					13	13	2	4	3	6
7 - 8					67	67	14	10	12	30
8 - 9					52	52	21	33	27	35
9 - 10					66	66	38	44	41	49
10 - 11					66	66	49	51	50	55
11 - 12					58	58	67	31	49	52
12 - 1				61	69	65	50	67	59	62
1 - 2				56	76	66	59	46	53	59
2 - 3				57	84	71	73	45	59	65
3 - 4				89	100	95	48	47	48	71
4 - 5				77	82	80	61	44	53	66
5 - 6				68	112	90	45	48	47	68
6 - 7				64	68	66	43	39	41	54
7 - 8				60	52	56	45	46	46	51
8 - 9				49	50	50	39	34	37	43
9 - 10				33	31	32	36	25	31	31
10 - 11				13	26	20	18	10	14	17
11 - 12				10	8	9	6	8	7	8
TOTALS :				637	1093	1035	730	644	692	**836**
% Avg Day :				152%	131%	124%	87%	77%	83%	
AM (12am-10am) Peak Volumes										
15 Minute :					40	40	16	24	15	17
One Hour :					74	74	38	63	46	52
P.H.F. :					0.46	0.46	0.59	0.66	0.77	0.76
PH Begins :					7:30am	7:30am	9:00am	8:45am	8:45am	8:45am
Mid (10am-2pm) Peak Volumes										
15 Minute :				19	28	21	22	24	18	18
One Hour :				61	76	69	67	72	59	62
P.H.F. :				0.80	0.76	0.86	0.76	0.75	0.82	0.86
PH Begins :				12:00pm	12:15pm	11:45am	11:00am	12:15pm	12:00pm	12:00pm
PM (2pm-12am) Peak Volumes										
15 Minute :				32	44	38	22	18	17	25
One Hour :				93	114	102	73	54	60	77
P.H.F. :				0.73	0.65	0.67	0.83	0.90	0.88	0.77
PH Begins :				2:45pm	2:15pm	2:45pm	2:00pm	5:15pm	2:00pm	2:30pm

Lane #1 Weekly 24 Hour Volume Data 09/10/2012 to 09/16/2012

Time	09/10 MON	09/11 TUE	09/12 WED	09/13 THU	09/14 FRI	Weekday Average	09/15 SAT	09/16 SUN	Weekend Average	Week Average
12 - 1	4	1	3	5		3				3
1 - 2	1	1	1	2		1				1
2 - 3	1	0	1	1		1				1
3 - 4	0	1	0	4		1				1
4 - 5	3	2	4	2		3				3
5 - 6	7	9	5	8		7				7
6 - 7	8	8	10	3		7				7
7 - 8	77	63	71	65		69				69
8 - 9	40	47	47	25		40				40
9 - 10	51	45	31			42				42
10 - 11	65	41	40			49				49
11 - 12	70	68	60			66				66
12 - 1	58	50	52			53				53
1 - 2	66	54	75			65				65
2 - 3	59	76	89			75				75
3 - 4	90	89	74			84				84
4 - 5	54	62	69			62				62
5 - 6	95	100	91			95				95
6 - 7	72	81	73			75				75
7 - 8	65	51	61			59				59
8 - 9	46	59	56			54				54
9 - 10	33	19	29			27				27
10 - 11	12	15	10			12				12
11 - 12	7	2	4			4				4
TOTALS :	984	944	956	115		954				**954**
% Avg Day :	103%	99%	100%	32%		100%				

			AM (12am-10am) Peak Volumes			
15 Minute :	34	22	32	28	29	29
One Hour :	77	63	71	65	69	69
P.H.F. :	0.57	0.72	0.55	0.58	0.59	0.59
PH Begins :	7:00am	7:00am	7:00am	7:00am	7:00am	7:00am
			Mid (10am-2pm) Peak Volumes			
15 Minute :	23	21	23		19	19
One Hour :	73	71	75		66	66
P.H.F. :	0.79	0.85	0.82		0.87	0.87
PH Begins :	10:45am	11:15am	1:00pm		11:00am	11:00am
			PM (2pm-12am) Peak Volumes			
15 Minute :	29	33	37		26	26
One Hour :	95	114	94		95	95
P.H.F. :	0.82	0.92	0.94		0.91	0.91
PH Begins :	5:00pm	2:30pm	5:15pm		5:00pm	5:00pm

Lane #2 Weekly 24 Hour Volume Data 09/03/2012 to 09/09/2012

Time	09/03 MON	09/04 TUE	09/05 WED	09/06 THU	09/07 FRI	Weekday Average	09/08 SAT	09/09 SUN	Weekend Average	Week Average
12 - 1					1	1	8	3	6	4
1 - 2					1	1	4	3	4	3
2 - 3					1	1	3	2	3	2
3 - 4					2	2	3	2	3	2
4 - 5					2	2	1	0	1	1
5 - 6					13	13	6	2	4	7
6 - 7					21	21	12	9	11	14
7 - 8					72	72	20	8	14	33
8 - 9					58	58	41	24	33	41
9 - 10					53	53	65	40	53	53
10 - 11					66	66	64	60	62	63
11 - 12					67	67	55	39	47	54
12 - 1				48	77	63	63	97	80	71
1 - 2				52	64	58	48	51	50	54
2 - 3				78	73	76	53	36	45	60
3 - 4				66	82	74	63	44	54	64
4 - 5				69	82	76	55	38	47	61
5 - 6				70	92	81	48	42	45	63
6 - 7				65	44	55	47	42	45	50
7 - 8				43	45	44	47	33	40	42
8 - 9				30	39	35	25	34	30	32
9 - 10				26	26	26	24	21	23	24
10 - 11				9	15	12	11	11	11	12
11 - 12				3	8	6	10	6	8	7
TOTALS :				559	1004	963	776	647	719	**817**
% Avg Day :				137%	123%	118%	95%	79%	88%	
AM (12am-10am) Peak Volumes										
15 Minute :					30	30	25	15	20	17
One Hour :					72	72	65	40	54	53
P.H.F. :					0.60	0.60	0.65	0.67	0.68	0.78
PH Begins :					7:00am	7:00am	9:00am	9:00am	9:00am	9:00am
Mid (10am-2pm) Peak Volumes										
15 Minute :				20	30	22	21	41	31	23
One Hour :				52	80	74	66	97	81	71
P.H.F. :				0.65	0.67	0.84	0.79	0.59	0.65	0.77
PH Begins :				1:00pm	11:15am	10:30am	10:30am	12:00pm	12:00pm	12:00pm
PM (2pm-12am) Peak Volumes										
15 Minute :				31	28	30	20	12	16	19
One Hour :				85	103	86	63	45	55	68
P.H.F. :				0.79	0.92	0.80	0.79	0.94	0.86	0.89
PH Begins :				5:15pm	4:30pm	4:45pm	2:45pm	3:15pm	3:00pm	4:30pm

Lane #2 Weekly 24 Hour Volume Data 09/10/2012 to 09/16/2012

Time	09/10 MON	09/11 TUE	09/12 WED	09/13 THU	09/14 FRI	Weekday Average	09/15 SAT	09/16 SUN	Weekend Average	Week Average
12 - 1	2	6	3	1		3				3
1 - 2	1	0	0	0		0				0
2 - 3	1	0	0	0		0				0
3 - 4	3	5	4	2		4				4
4 - 5	1	3	6	3		3				3
5 - 6	11	9	4	11		9				9
6 - 7	25	27	24	18		24				24
7 - 8	67	66	73	75		70				70
8 - 9	52	54	48	24		45				45
9 - 10	45	46	45			45				45
10 - 11	75	55	43			58				58
11 - 12	52	58	74			61				61
12 - 1	46	60	50			52				52
1 - 2	54	38	72			55				55
2 - 3	74	70	72			72				72
3 - 4	69	71	60			67				67
4 - 5	59	60	80			66				66
5 - 6	86	88	80			85				85
6 - 7	53	67	66			62				62
7 - 8	36	39	54			43				43
8 - 9	24	34	41			33				33
9 - 10	20	10	26			19				19
10 - 11	3	13	9			8				8
11 - 12	5	2	0			2				2
TOTALS :	864	881	934	134		886				**886**
% Avg Day :	98%	99%	105%	40%		100%				

AM (12am-10am) Peak Volumes

15 Minute :	25	22	28	26	23	23
One Hour :	69	71	79	75	74	74
P.H.F. :	0.69	0.81	0.71	0.72	0.80	0.80
PH Begins :	7:15am	7:15am	7:15am	7:00am	7:15am	7:15am

Mid (10am-2pm) Peak Volumes

15 Minute :	22	21	27		18	18
One Hour :	75	66	74		61	61
P.H.F. :	0.85	0.87	0.84		0.95	0.95
PH Begins :	10:00am	11:15am	11:00am		11:00am	11:00am

PM (2pm-12am) Peak Volumes

15 Minute :	35	31	30		29	29
One Hour :	87	88	90		85	85
P.H.F. :	0.73	0.81	0.75		0.73	0.73
PH Begins :	2:30pm	5:00pm	4:15pm		5:00pm	5:00pm

Weekly 24 Hour Volume Report: JOHNS AT AFC

Info Line 1 :
Info Line 2 :
GPS Lat/Lon :

Last Connected Device Type : Apollo
Serial Number : 89892
Lanes : 2

Lane #1 Weekly 24 Hour Volume Data 09/24/2012 to 09/30/2012

Time	09/24 MON	09/25 TUE	09/26 WED	09/27 THU	09/28 FRI	Weekday Average	09/29 SAT	09/30 SUN	Weekend Average	Week Average
12 - 1					13	13	10	12	11	12
1 - 2					2	2	4	14	9	7
2 - 3					7	7	7	8	8	7
3 - 4					9	9	3	3	3	5
4 - 5					12	12	5	4	5	7
5 - 6					43	43	15	11	13	23
6 - 7					81	81	30	17	24	43
7 - 8					103	103	29	25	27	52
8 - 9					64	64	68	23	46	52
9 - 10					95	95	103	51	77	83
10 - 11					121	121	152	80	116	118
11 - 12					131	131	147	97	122	125
12 - 1					140	140	125	124	125	130
1 - 2					116	116	137	111	124	121
2 - 3					114	114	105	106	106	108
3 - 4					154	154	118	79	99	117
4 - 5					149	149	115	87	101	117
5 - 6					131	131	112	72	92	105
6 - 7					112	112	77	77	77	89
7 - 8					81	81	73	79	76	78
8 - 9				34	60	54	64	55	60	57
9 - 10				36	44	40	54	25	40	40
10 - 11				17	35	26	27	13	20	23
11 - 12				11	12	12	22	15	19	15
TOTALS :				98	1829	1810	1602	1188	1400	**1534**
% Avg Day :				41%	119%	118%	104%	77%	91%	

AM (12am-10am) Peak Volumes							
15 Minute :			37	37	30	20	23	24
One Hour :			107	107	103	51	77	83
P.H.F. :			0.72	0.72	0.86	0.64	0.84	0.86
PH Begins :			6:45am	6:45am	9:00am	9:00am	9:00am	9:00am
Mid (10am-2pm) Peak Volumes							
15 Minute :			40	40	44	41	37	36
One Hour :			146	146	158	128	135	136
P.H.F. :			0.91	0.91	0.96	0.78	0.96	0.94
PH Begins :			11:45am	11:45am	11:15am	12:15pm	11:30am	11:30am
PM (2pm-12am) Peak Volumes							
15 Minute :	15	51	51	34	36	29	35
One Hour :	47	154	154	121	106	109	121
P.H.F. :	0.78	0.75	0.75	0.89	0.74	0.94	0.86
PH Begins :	8:15pm	2:30pm	2:30pm	3:45pm	2:00pm	2:15pm	2:30pm

Lane #1 Weekly 24 Hour Volume Data 10/01/2012 to 10/07/2012

Time	10/01 MON	10/02 TUE	10/03 WED	10/04 THU	10/05 FRI	Weekday Average	10/06 SAT	10/07 SUN	Weekend Average	Week Average
12 - 1	7	4	5	5	3	5	15	11	13	7
1 - 2	0	1	5	5	4	3	4	6	5	4
2 - 3	4	4	3	2	2	3	4	7	6	4
3 - 4	8	7	8	7	5	7	2	1	2	5
4 - 5	15	17	13	11	10	13	5	3	4	11
5 - 6	47	45	43	43	35	43	11	6	9	33
6 - 7	62	81	74	89	59	73	18	13	16	57
7 - 8	112	110	104	79	76	96	33	15	24	76
8 - 9	95	78	81	77	72	81	63	40	52	72
9 - 10	117	101	93	99	98	102	84	39	62	90
10 - 11	101	118	119	106	108	110	116	79	98	107
11 - 12	112	125	125	127	155	129	116	108	112	124
12 - 1	145	122	132	137	134	134	153	112	133	134
1 - 2	127	120	143	123	144	131	110	110	110	125
2 - 3	110	113	144	112	126	121	128	97	113	119
3 - 4	152	124	148	135	117	135	114	94	104	126
4 - 5	121	128	117	141	161	134	116	106	111	127
5 - 6	120	130	155	121	125	130	102	100	101	122
6 - 7	113	111	119	100	96	108	91	86	89	102
7 - 8	91	97	78	93	89	90	58	66	62	82
8 - 9	45	60	53	52	69	56	55	52	54	55
9 - 10	38	43	47	38	38	41	26	31	29	37
10 - 11	19	12	18	28	27	21	31	12	22	21
11 - 12	9	8	8	13	17	11	17	4	11	11
TOTALS :	1770	1759	1835	1743	1770	1777	1472	1198	1342	**1651**
% Avg Day :	107%	107%	111%	106%	107%	108%	89%	73%	81%	
				AM (12am-10am) Peak Volumes						
15 Minute :	38	43	33	37	31	31	28	16	20	25
One Hour :	119	118	104	99	100	102	84	45	62	90
P.H.F. :	0.78	0.69	0.79	0.67	0.81	0.88	0.75	0.70	0.78	0.98
PH Begins :	8:45am	6:45am	6:45am	9:00am	8:45am	9:00am	9:00am	8:30am	9:00am	9:00am
				Mid (10am-2pm) Peak Volumes						
15 Minute :	41	39	49	42	44	40	48	36	35	39
One Hour :	145	133	165	139	161	138	159	124	133	134
P.H.F. :	0.88	0.90	0.84	0.85	0.91	0.86	0.83	0.86	0.95	0.86
PH Begins :	12:00pm	11:15am	12:30pm	12:45pm	11:15am	11:15am	11:45am	12:15pm	12:00pm	11:45am
				PM (2pm-12am) Peak Volumes						
15 Minute :	42	43	49	39	46	40	40	36	35	35
One Hour :	152	145	162	144	166	146	128	109	116	134
P.H.F. :	0.90	0.84	0.83	0.92	0.90	0.91	0.89	0.80	0.83	0.96
PH Begins :	3:00pm	4:45pm	4:30pm	4:15pm	4:15pm	4:30pm	2:00pm	4:30pm	2:15pm	4:15pm

Lane #1 Weekly 24 Hour Volume Data 10/08/2012 to 10/14/2012

Time	10/08 MON	10/09 TUE	10/10 WED	10/11 THU	10/12 FRI	Weekday Average	10/13 SAT	10/14 SUN	Weekend Average	Week Average
12 - 1	4	5				5				5
1 - 2	7	3				5				5
2 - 3	2	5				4				4
3 - 4	2	5				4				4
4 - 5	11	13				12				12
5 - 6	38	46				42				42
6 - 7	54	68				61				61
7 - 8	95	122				109				109
8 - 9	69	36				70				70
9 - 10	92					92				92
10 - 11	92					92				92
11 - 12	111					111				111
12 - 1	125					125				125
1 - 2	99					99				99
2 - 3	105					105				105
3 - 4	126					126				126
4 - 5	110					110				110
5 - 6	114					114				114
6 - 7	99					99				99
7 - 8	81					81				81
8 - 9	43					43				43
9 - 10	20					20				20
10 - 11	14					14				14
11 - 12	5					5				5
TOTALS :	1518	303				1548				**1548**
% Avg Day :	98%	55%				100%				

AM (12am-10am) Peak Volumes

15 Minute :	33	38	36	36
One Hour :	95	122	110	110
P.H.F. :	0.72	0.80	0.76	0.76
PH Begins :	6:45am	7:00am	7:00am	7:00am

Mid (10am-2pm) Peak Volumes

15 Minute :	36		36	36
One Hour :	125		125	125
P.H.F. :	0.95		0.95	0.95
PH Begins :	12:00pm		12:00pm	12:00pm

PM (2pm-12am) Peak Volumes

15 Minute :	39		39	39
One Hour :	128		128	128
P.H.F. :	0.82		0.82	0.82
PH Begins :	2:45pm		2:45pm	2:45pm

Lane #2 Weekly 24 Hour Volume Data 09/24/2012 to 09/30/2012

Time	09/24 MON	09/25 TUE	09/26 WED	09/27 THU	09/28 FRI	Weekday Average	09/29 SAT	09/30 SUN	Weekend Average	Week Average
12 - 1					7	7	9	25	17	14
1 - 2					3	3	7	29	18	13
2 - 3					4	4	4	9	7	6
3 - 4					1	1	3	5	4	3
4 - 5					5	5	3	2	3	3
5 - 6					20	20	11	5	8	12
6 - 7					28	28	19	14	17	20
7 - 8					68	68	34	23	29	42
8 - 9					70	70	71	46	59	62
9 - 10					97	97	84	85	85	89
10 - 11					93	93	148	89	119	110
11 - 12					129	129	146	91	119	122
12 - 1					145	145	136	123	130	135
1 - 2					139	139	141	107	124	129
2 - 3					166	166	153	123	138	147
3 - 4					150	150	143	129	136	141
4 - 5					149	149	142	111	127	134
5 - 6					151	151	129	113	121	131
6 - 7					183	183	88	88	88	120
7 - 8					116	116	103	97	100	105
8 - 9				49	70	68	79	56	68	68
9 - 10				51	56	54	72	40	56	55
10 - 11				23	40	32	40	17	29	30
11 - 12				20	29	25	22	13	18	21
TOTALS :				143	1919	1903	1787	1440	1620	**1712**
% Avg Day :				53%	112%	111%	104%	84%	95%	
AM (12am-10am) Peak Volumes										
15 Minute :					31	31	32	36	29	28
One Hour :					97	97	93	96	96	95
P.H.F. :					0.78	0.78	0.73	0.67	0.83	0.85
PH Begins :					9:00am	9:00am	8:45am	8:45am	8:45am	8:45am
Mid (10am-2pm) Peak Volumes										
15 Minute :					54	54	46	37	39	40
One Hour :					163	163	157	123	137	139
P.H.F. :					0.75	0.75	0.85	0.83	0.88	0.94
PH Begins :					12:15pm	12:15pm	11:15am	12:00pm	11:45am	11:45am
PM (2pm-12am) Peak Volumes										
15 Minute :				20	53	53	44	43	41	44
One Hour :				59	183	183	158	133	141	148
P.H.F. :				0.74	0.88	0.88	0.90	0.77	0.86	0.84
PH Begins :				8:15pm	5:30pm	5:30pm	2:15pm	3:15pm	3:45pm	2:00pm

Lane #2 Weekly 24 Hour Volume Data 10/01/2012 to 10/07/2012

Time	10/01 MON	10/02 TUE	10/03 WED	10/04 THU	10/05 FRI	Weekday Average	10/06 SAT	10/07 SUN	Weekend Average	Week Average
12 - 1	10	11	7	10	16	11	16	11	14	12
1 - 2	3	3	6	3	8	5	11	6	9	6
2 - 3	2	3	0	2	5	2	6	3	5	3
3 - 4	2	3	1	4	4	3	5	6	6	4
4 - 5	5	6	2	0	1	3	2	4	3	3
5 - 6	7	6	7	10	8	8	6	4	5	7
6 - 7	30	26	32	28	28	29	13	12	13	24
7 - 8	67	73	75	70	40	65	37	12	25	53
8 - 9	66	70	77	74	64	70	55	41	48	64
9 - 10	84	95	81	80	92	86	91	53	72	82
10 - 11	97	112	111	103	116	108	112	83	98	105
11 - 12	123	110	146	112	142	127	123	86	105	120
12 - 1	135	147	129	133	139	137	160	127	144	139
1 - 2	126	135	133	137	148	136	138	124	131	134
2 - 3	124	160	122	142	146	139	158	113	136	138
3 - 4	139	165	156	167	146	155	144	111	128	147
4 - 5	161	190	171	162	150	167	128	119	124	154
5 - 6	181	188	167	175	176	177	136	126	131	164
6 - 7	148	145	154	132	159	148	127	90	109	136
7 - 8	110	117	107	112	95	108	87	70	79	100
8 - 9	63	71	74	58	75	68	60	57	59	65
9 - 10	65	45	53	46	45	51	61	30	46	49
10 - 11	16	27	33	48	43	33	47	21	34	34
11 - 12	10	7	9	13	29	14	17	11	14	14
TOTALS :	1774	1915	1853	1821	1875	1850	1740	1320	1538	**1757**
% Avg Day :	101%	109%	105%	104%	107%	105%	99%	75%	88%	
				AM (12am-10am) Peak Volumes						
15 Minute :	25	30	29	26	26	23	32	19	24	23
One Hour :	84	97	83	81	92	87	91	56	73	83
P.H.F. :	0.88	0.81	0.83	0.78	0.88	0.95	0.71	0.74	0.76	0.90
PH Begins :	9:00am	8:45am	8:45am	7:15am	9:00am	9:00am	9:00am	8:45am	9:00am	9:00am
				Mid (10am-2pm) Peak Volumes						
15 Minute :	43	47	42	38	44	36	61	39	41	37
One Hour :	137	147	146	146	153	137	165	133	145	138
P.H.F. :	0.80	0.78	0.89	0.96	0.87	0.98	0.68	0.90	0.88	0.93
PH Begins :	11:45am	12:00pm	11:00am	12:30pm	11:30am	12:45pm	11:30am	12:30pm	12:00pm	12:00pm
				PM (2pm-12am) Peak Volumes						
15 Minute :	59	64	57	51	50	48	48	40	42	43
One Hour :	187	197	183	175	184	178	162	130	148	164
P.H.F. :	0.79	0.77	0.80	0.93	0.92	0.93	0.84	0.93	0.88	0.95
PH Begins :	5:15pm	4:45pm	4:30pm	5:00pm	4:45pm	4:45pm	2:15pm	2:45pm	2:45pm	4:45pm

Lane #2 Weekly 24 Hour Volume Data 10/08/2012 to 10/14/2012

Time	10/08 MON	10/09 TUE	10/10 WED	10/11 THU	10/12 FRI	Weekday Average	10/13 SAT	10/14 SUN	Weekend Average	Week Average
12 - 1	5	7				6				6
1 - 2	3	7				5				5
2 - 3	1	3				2				2
3 - 4	1	1				1				1
4 - 5	4	6				5				5
5 - 6	13	10				12				12
6 - 7	19	29				24				24
7 - 8	70	66				68				68
8 - 9	49	28				51				51
9 - 10	70					70				70
10 - 11	103					103				103
11 - 12	107					107				107
12 - 1	116					116				116
1 - 2	108					108				108
2 - 3	102					102				102
3 - 4	138					138				138
4 - 5	144					144				144
5 - 6	169					169				169
6 - 7	126					126				126
7 - 8	83					83				83
8 - 9	59					59				59
9 - 10	34					34				34
10 - 11	29					29				29
11 - 12	16					16				16
TOTALS :	1569	157				1578				**1578**
% Avg Day :	99%	28%				100%				

	AM (12am-10am) Peak Volumes			
15 Minute :	27	25	26	26
One Hour :	78	68	75	75
P.H.F. :	0.72	0.68	0.85	0.85
PH Begins :	7:15am	7:15am	8:45am	8:45am
	Mid (10am-2pm) Peak Volumes			
15 Minute :	40		40	40
One Hour :	119		119	119
P.H.F. :	0.80		0.80	0.80
PH Begins :	11:30am		11:30am	11:30am
	PM (2pm-12am) Peak Volumes			
15 Minute :	49		49	49
One Hour :	170		170	170
P.H.F. :	0.87		0.87	0.87
PH Begins :	5:15pm		5:15pm	5:15pm

Weekly 24 Hour Volume Report: JOHNS AT DEWEY

Info Line 1 :
Info Line 2 :
GPS Lat/Lon :

Last Connected Device Type : Apollo
Serial Number : 89891
Lanes : 2

Lane #1 Weekly 24 Hour Volume Data 09/24/2012 to 09/30/2012

Time	09/24 MON	09/25 TUE	09/26 WED	09/27 THU	09/28 FRI	Weekday Average	09/29 SAT	09/30 SUN	Weekend Average	Week Average
12 - 1					5	5	5	3	4	4
1 - 2					0	0	7	3	5	3
2 - 3					1	1	2	5	4	3
3 - 4					0	0	0	2	1	1
4 - 5					4	4	1	4	3	3
5 - 6					7	7	2	2	2	4
6 - 7					14	14	11	5	8	10
7 - 8					33	33	9	7	8	16
8 - 9					45	45	32	21	27	33
9 - 10					44	44	38	33	36	38
10 - 11					43	43	48	28	38	40
11 - 12					71	71	48	57	53	59
12 - 1					78	78	55	39	47	57
1 - 2					63	63	39	45	42	49
2 - 3					82	82	63	60	62	68
3 - 4					75	75	72	45	59	64
4 - 5					63	63	58	39	49	53
5 - 6					54	54	41	33	37	43
6 - 7					42	42	40	39	40	40
7 - 8				13	55	54	51	30	41	46
8 - 9				23	31	27	40	35	38	32
9 - 10				25	27	26	20	13	17	21
10 - 11				7	13	10	12	11	12	11
11 - 12				6	6	6	8	1	5	5
TOTALS :				74	856	847	702	560	638	**703**
% Avg Day :				59%	122%	120%	100%	80%	91%	
AM (12am-10am) Peak Volumes										
15 Minute :					14	14	17	11	13	13
One Hour :					45	45	38	35	36	37
P.H.F. :					0.94	0.94	0.56	0.80	0.69	0.71
PH Begins :					8:00am	8:00am	9:00am	8:45am	9:00am	9:00am
Mid (10am-2pm) Peak Volumes										
15 Minute :					27	27	18	18	15	17
One Hour :					85	85	62	57	55	58
P.H.F. :					0.79	0.79	0.86	0.79	0.92	0.85
PH Begins :					12:15pm	12:15pm	11:30am	11:00am	11:15am	11:00am
PM (2pm-12am) Peak Volumes										
15 Minute :				13	28	28	26	22	21	21
One Hour :				34	82	82	77	60	66	69
P.H.F. :				0.65	0.89	0.89	0.74	0.68	0.83	0.82
PH Begins :				7:45pm	2:00pm	2:00pm	2:30pm	2:00pm	2:30pm	2:00pm

Lane #1 Weekly 24 Hour Volume Data 10/01/2012 to 10/07/2012

Time	10/01 MON	10/02 TUE	10/03 WED	10/04 THU	10/05 FRI	Weekday Average	10/06 SAT	10/07 SUN	Weekend Average	Week Average
12 - 1	2	7	5	4	4	4	6	7	7	5
1 - 2	1	1	1	0	3	1	2	3	3	2
2 - 3	0	3	1	2	2	2	0	0	0	1
3 - 4	3	2	1	2	0	2	0	0	0	1
4 - 5	5	1	2	3	2	3	1	1	1	2
5 - 6	8	12	9	8	3	8	3	3	3	7
6 - 7	19	15	18	8	14	15	6	7	7	12
7 - 8	31	30	30	26	21	28	11	8	10	22
8 - 9	43	48	46	32	41	42	21	15	18	35
9 - 10	54	49	45	49	50	49	31	23	27	43
10 - 11	68	62	90	65	52	67	35	29	32	57
11 - 12	76	52	126	68	56	76	46	26	36	64
12 - 1	70	72	59	74	71	69	40	44	42	61
1 - 2	63	53	82	72	55	65	46	35	41	58
2 - 3	77	75	69	78	70	74	55	36	46	66
3 - 4	71	104	78	69	58	76	42	34	38	65
4 - 5	89	88	84	54	55	74	45	49	47	66
5 - 6	45	90	48	52	47	56	46	46	46	53
6 - 7	48	65	53	55	46	53	34	29	32	47
7 - 8	35	44	32	54	51	43	37	19	28	39
8 - 9	20	35	23	14	24	23	23	21	22	23
9 - 10	28	18	29	24	24	25	13	14	14	21
10 - 11	13	11	10	13	12	12	14	6	10	11
11 - 12	5	2	4	7	12	6	6	3	5	6
TOTALS :	874	939	945	833	773	873	563	458	515	**767**
% Avg Day :	114%	122%	123%	109%	101%	114%	73%	60%	67%	
AM (12am-10am) Peak Volumes										
15 Minute :	17	17	13	15	17	13	12	9	9	12
One Hour :	54	51	46	49	50	49	32	23	27	43
P.H.F. :	0.79	0.75	0.88	0.82	0.74	0.94	0.67	0.64	0.75	0.90
PH Begins :	8:45am	8:30am	8:00am	9:00am	9:00am	9:00am	8:45am	9:00am	9:00am	9:00am
Mid (10am-2pm) Peak Volumes										
15 Minute :	27	21	44	25	24	20	19	21	15	18
One Hour :	88	72	131	82	74	77	53	54	47	65
P.H.F. :	0.81	0.86	0.74	0.93	0.77	0.96	0.70	0.64	0.78	0.90
PH Begins :	11:15am	12:00pm	10:45am	10:30am	11:45am	11:15am	11:30am	12:30pm	12:30pm	11:15am
PM (2pm-12am) Peak Volumes										
15 Minute :	26	31	25	26	22	21	20	19	16	18
One Hour :	97	104	84	78	70	79	59	58	53	68
P.H.F. :	0.93	0.84	0.91	0.75	0.80	0.94	0.74	0.76	0.95	0.94
PH Begins :	3:45pm	3:00pm	4:00pm	2:00pm	2:00pm	3:45pm	2:15pm	4:15pm	4:30pm	3:45pm

Lane #1 Weekly 24 Hour Volume Data 10/08/2012 to 10/14/2012

Time	10/08 MON	10/09 TUE	10/10 WED	10/11 THU	10/12 FRI	Weekday Average	10/13 SAT	10/14 SUN	Weekend Average	Week Average
12 - 1	2	1				2				2
1 - 2	0	0				0				0
2 - 3	2	0				1				1
3 - 4	1	0				1				1
4 - 5	2	6				4				4
5 - 6	10	8				9				9
6 - 7	14	19				17				17
7 - 8	23	22				23				23
8 - 9	37	32				39				39
9 - 10	54					54				54
10 - 11	48					48				48
11 - 12	69					69				69
12 - 1	58					58				58
1 - 2	55					55				55
2 - 3	61					61				61
3 - 4	73					73				73
4 - 5	69					69				69
5 - 6	48					48				48
6 - 7	60					60				60
7 - 8	45					45				45
8 - 9	21					21				21
9 - 10	23					23				23
10 - 11	10					10				10
11 - 12	6					6				6
TOTALS :	791	88				796				**796**
% Avg Day :	99%	30%				100%				

AM (12am-10am) Peak Volumes

15 Minute :	17	15	17	17
One Hour :	54	34	54	54
P.H.F. :	0.79	0.57	0.79	0.79
PH Begins :	9:00am	7:45am	9:00am	9:00am

Mid (10am-2pm) Peak Volumes

15 Minute :	24		24	24
One Hour :	74		74	74
P.H.F. :	0.77		0.77	0.77
PH Begins :	11:15am		11:15am	11:15am

PM (2pm-12am) Peak Volumes

15 Minute :	22		22	22
One Hour :	77		77	77
P.H.F. :	0.88		0.88	0.88
PH Begins :	3:15pm		3:15pm	3:15pm

Lane #2 Weekly 24 Hour Volume Data 09/24/2012 to 09/30/2012

Time	09/24 MON	09/25 TUE	09/26 WED	09/27 THU	09/28 FRI	Weekday Average	09/29 SAT	09/30 SUN	Weekend Average	Week Average
12 - 1					2	2	5	9	7	5
1 - 2					3	3	4	2	3	3
2 - 3					2	2	4	2	3	3
3 - 4					1	1	1	0	1	1
4 - 5					3	3	1	1	1	2
5 - 6					10	10	3	4	4	6
6 - 7					11	11	8	6	7	8
7 - 8					32	32	5	3	4	13
8 - 9					39	39	24	11	18	25
9 - 10					40	40	44	28	36	37
10 - 11					42	42	42	44	43	43
11 - 12					51	51	57	47	52	52
12 - 1					54	54	68	52	60	58
1 - 2					54	54	50	45	48	50
2 - 3					68	68	67	45	56	60
3 - 4					66	66	56	43	50	55
4 - 5					77	77	41	35	38	51
5 - 6					50	50	74	28	51	51
6 - 7					41	41	38	44	41	41
7 - 8				10	63	58	55	43	49	53
8 - 9				28	33	31	37	36	37	34
9 - 10				15	24	20	21	12	17	18
10 - 11				12	13	13	14	11	13	13
11 - 12				6	11	9	11	5	8	8
TOTALS :				71	790	777	730	556	647	**690**
% Avg Day :				58%	114%	113%	106%	81%	94%	
AM (12am-10am) Peak Volumes										
15 Minute :					12	12	14	12	12	11
One Hour :					42	42	45	28	37	38
P.H.F. :					0.88	0.88	0.80	0.58	0.77	0.86
PH Begins :					7:45am	7:45am	8:45am	9:00am	9:00am	9:00am
Mid (10am-2pm) Peak Volumes										
15 Minute :					17	17	22	19	17	17
One Hour :					61	61	68	60	61	59
P.H.F. :					0.90	0.90	0.89	0.79	0.90	0.87
PH Begins :					12:15pm	12:15pm	12:00pm	12:30pm	12:00pm	12:15pm
PM (2pm-12am) Peak Volumes										
15 Minute :				10	25	25	26	17	17	17
One Hour :				30	83	83	74	51	57	61
P.H.F. :				0.75	0.83	0.83	0.77	0.75	0.84	0.90
PH Begins :				7:45pm	3:30pm	3:30pm	2:30pm	7:15pm	2:00pm	2:00pm

Lane #2 Weekly 24 Hour Volume Data 10/01/2012 to 10/07/2012

Time	10/01 MON	10/02 TUE	10/03 WED	10/04 THU	10/05 FRI	Weekday Average	10/06 SAT	10/07 SUN	Weekend Average	Week Average
12 - 1	2	2	4	2	2	2	7	5	6	3
1 - 2	3	3	0	1	2	2	1	2	2	2
2 - 3	0	1	0	3	1	1	1	1	1	1
3 - 4	0	2	0	0	0	0	2	3	3	1
4 - 5	3	2	1	1	1	2	1	3	2	2
5 - 6	7	5	7	6	8	7	4	6	5	6
6 - 7	17	18	16	11	15	15	0	6	3	12
7 - 8	29	37	32	24	25	29	5	4	5	22
8 - 9	42	51	38	36	27	39	21	9	15	32
9 - 10	73	45	51	41	36	49	32	13	23	42
10 - 11	67	47	56	57	62	58	39	30	35	51
11 - 12	75	51	99	69	57	70	52	39	46	63
12 - 1	64	64	88	61	59	67	43	40	42	60
1 - 2	62	79	78	68	64	70	48	55	52	65
2 - 3	66	78	67	72	76	72	41	34	38	62
3 - 4	66	74	63	89	66	72	50	27	39	62
4 - 5	65	82	80	52	46	65	48	42	45	59
5 - 6	57	79	68	70	64	68	45	41	43	61
6 - 7	60	57	55	45	37	51	37	35	36	47
7 - 8	38	40	35	38	49	40	22	30	26	36
8 - 9	34	48	47	18	26	35	34	21	28	33
9 - 10	31	16	24	16	6	19	15	12	14	17
10 - 11	10	13	7	9	10	10	11	6	9	9
11 - 12	3	6	6	7	15	7	7	6	7	7
TOTALS :	874	900	922	796	754	850	566	470	525	**755**
% Avg Day :	116%	119%	122%	105%	100%	113%	75%	62%	70%	
AM (12am-10am) Peak Volumes										
15 Minute :	21	15	14	14	14	14	11	6	8	12
One Hour :	73	57	51	41	38	50	35	14	25	41
P.H.F. :	0.87	0.95	0.91	0.73	0.68	0.89	0.80	0.58	0.78	0.85
PH Begins :	9:00am	7:30am	9:00am	9:00am	8:45am	9:00am	8:45am	8:30am	8:45am	9:00am
Mid (10am-2pm) Peak Volumes										
15 Minute :	23	24	35	25	24	22	19	19	19	19
One Hour :	78	79	112	77	67	71	55	55	53	65
P.H.F. :	0.85	0.82	0.80	0.77	0.70	0.81	0.72	0.72	0.70	0.96
PH Begins :	10:15am	1:00pm	11:30am	12:45pm	11:45am	11:00am	10:45am	1:00pm	1:00pm	1:00pm
PM (2pm-12am) Peak Volumes										
15 Minute :	23	28	28	29	24	21	17	18	15	18
One Hour :	68	85	83	89	76	74	55	52	48	65
P.H.F. :	0.74	0.92	0.74	0.77	0.86	0.97	0.86	0.72	0.86	0.96
PH Begins :	3:15pm	4:45pm	3:45pm	3:00pm	2:00pm	3:15pm	2:45pm	4:15pm	5:30pm	3:15pm

Lane #2 Weekly 24 Hour Volume Data 10/08/2012 to 10/14/2012

Time	10/08 MON	10/09 TUE	10/10 WED	10/11 THU	10/12 FRI	Weekday Average	10/13 SAT	10/14 SUN	Weekend Average	Week Average
12 - 1	1	5				3				3
1 - 2	0	0				0				0
2 - 3	1	0				1				1
3 - 4	2	1				2				2
4 - 5	1	3				2				2
5 - 6	7	9				8				8
6 - 7	9	16				13				13
7 - 8	21	34				28				28
8 - 9	46	33				45				45
9 - 10	47					47				47
10 - 11	51					51				51
11 - 12	78					78				78
12 - 1	58					58				58
1 - 2	71					71				71
2 - 3	55					55				55
3 - 4	67					67				67
4 - 5	58					58				58
5 - 6	45					45				45
6 - 7	50					50				50
7 - 8	38					38				38
8 - 9	22					22				22
9 - 10	20					20				20
10 - 11	8					8				8
11 - 12	7					7				7
TOTALS :	763	101				777				**777**
% Avg Day :	98%	36%				100%				

AM (12am-10am) Peak Volumes

15 Minute :	20	14				20				20
One Hour :	55	42				55				55
P.H.F. :	0.69	0.75				0.69				0.69
PH Begins :	8:45am	7:30am				8:45am				8:45am

Mid (10am-2pm) Peak Volumes

15 Minute :	25					25				25
One Hour :	78					78				78
P.H.F. :	0.89					0.89				0.89
PH Begins :	11:00am					11:00am				11:00am

PM (2pm-12am) Peak Volumes

15 Minute :	23					23				23
One Hour :	67					67				67
P.H.F. :	0.76					0.76				0.76
PH Begins :	2:15pm					2:15pm				2:15pm

Weekly 24 Hour Volume Report: LOCUST MAPLE

Info Line 1 :
Info Line 2 :
GPS Lat/Lon :

Last Connected Device Type : Apollo
Serial Number : 89894
Lanes : 2

Lane #1 Weekly 24 Hour Volume Data 09/24/2012 to 09/30/2012

Time	09/24 MON	09/25 TUE	09/26 WED	09/27 THU	09/28 FRI	Weekday Average	09/29 SAT	09/30 SUN	Weekend Average	Week Average
12 - 1					3	3	3	12	8	6
1 - 2					4	4	8	3	6	5
2 - 3					2	2	6	2	4	3
3 - 4					2	2	1	1	1	1
4 - 5					5	5	1	1	1	2
5 - 6					11	11	4	7	6	7
6 - 7					15	15	11	6	9	11
7 - 8					39	39	4	7	6	17
8 - 9					49	49	23	19	21	30
9 - 10					54	54	49	32	41	45
10 - 11					63	63	56	56	56	58
11 - 12					64	64	59	58	59	60
12 - 1					75	75	71	68	70	71
1 - 2					71	71	65	59	62	65
2 - 3					68	68	81	48	65	66
3 - 4					92	92	61	55	58	69
4 - 5					88	88	58	57	58	68
5 - 6					87	87	80	36	58	68
6 - 7					51	51	52	48	50	50
7 - 8				20	61	65	70	57	64	64
8 - 9				37	42	40	41	42	42	41
9 - 10				22	26	24	30	19	25	24
10 - 11				9	14	12	17	12	15	13
11 - 12				8	15	12	15	5	10	11
TOTALS :				96	1001	996	866	710	795	**855**
% Avg Day :				63%	117%	116%	101%	83%	93%	
AM (12am-10am) Peak Volumes										
15 Minute :					17	17	15	12	12	12
One Hour :					54	54	50	32	41	45
P.H.F. :					0.90	0.90	0.83	0.67	0.85	0.94
PH Begins :					9:00am	9:00am	8:45am	9:00am	8:45am	9:00am
Mid (10am-2pm) Peak Volumes										
15 Minute :					24	24	23	24	20	21
One Hour :					77	77	72	76	74	73
P.H.F. :					0.80	0.80	0.86	0.83	0.93	0.87
PH Begins :					12:30pm	12:30pm	12:15pm	12:30pm	12:15pm	12:30pm
PM (2pm-12am) Peak Volumes										
15 Minute :				20	33	33	27	19	22	23
One Hour :				50	101	101	81	62	67	76
P.H.F. :				0.63	0.77	0.77	0.88	0.82	0.76	0.83
PH Begins :				7:45pm	3:45pm	3:45pm	2:00pm	7:15pm	7:15pm	3:30pm

Lane #1 Weekly 24 Hour Volume Data 10/01/2012 to 10/07/2012

Time	10/01 MON	10/02 TUE	10/03 WED	10/04 THU	10/05 FRI	Weekday Average	10/06 SAT	10/07 SUN	Weekend Average	Week Average
12 - 1	2	3	2	2	4	3	14	11	13	5
1 - 2	5	3	0	1	4	3	4	0	2	2
2 - 3	0	1	0	3	1	1	1	1	1	1
3 - 4	0	3	0	1	1	1	2	4	3	2
4 - 5	2	3	3	2	2	2	4	3	4	3
5 - 6	10	10	14	8	6	10	5	10	8	9
6 - 7	25	18	23	16	26	22	4	9	7	17
7 - 8	37	54	46	34	41	42	11	6	9	33
8 - 9	54	64	48	55	51	54	23	15	19	44
9 - 10	94	74	63	45	68	69	44	15	30	58
10 - 11	79	68	86	73	87	79	55	39	47	70
11 - 12	78	76	116	83	81	87	61	47	54	77
12 - 1	75	70	109	63	77	79	49	53	51	71
1 - 2	80	100	86	88	90	89	56	72	64	82
2 - 3	80	93	84	87	101	89	57	51	54	79
3 - 4	76	103	87	102	100	94	79	51	65	85
4 - 5	95	106	91	75	83	90	74	49	62	82
5 - 6	77	98	82	78	89	85	69	53	61	78
6 - 7	64	61	74	55	77	66	68	42	55	63
7 - 8	52	47	44	78	79	60	56	37	47	56
8 - 9	45	47	51	41	35	44	53	21	37	42
9 - 10	34	24	25	32	19	27	22	18	20	25
10 - 11	19	14	9	15	19	15	14	4	9	13
11 - 12	5	7	9	13	18	10	13	9	11	11
TOTALS :	1088	1147	1152	1050	1159	1121	838	620	733	**1008**
% Avg Day :	108%	114%	114%	104%	115%	111%	83%	62%	73%	
AM (12am-10am) Peak Volumes										
15 Minute :	28	23	18	19	21	20	12	7	9	16
One Hour :	94	75	63	55	69	69	44	17	31	56
P.H.F. :	0.84	0.82	0.88	0.72	0.82	0.86	0.92	0.71	0.86	0.88
PH Begins :	9:00am	7:30am	9:00am	8:00am	8:45am	9:00am	9:00am	8:30am	9:00am	9:00am
Mid (10am-2pm) Peak Volumes										
15 Minute :	28	30	36	28	26	24	20	24	19	21
One Hour :	88	100	122	88	90	89	62	72	65	82
P.H.F. :	0.92	0.83	0.85	0.79	0.87	0.93	0.82	0.75	0.86	0.98
PH Begins :	10:15am	1:00pm	11:15am	1:00pm	1:00pm	1:00pm	11:30am	1:00pm	1:00pm	1:00pm
PM (2pm-12am) Peak Volumes										
15 Minute :	28	38	27	28	33	27	27	18	22	23
One Hour :	95	108	97	108	103	97	84	56	67	86
P.H.F. :	0.85	0.71	0.90	0.96	0.78	0.90	0.78	0.78	0.84	0.93
PH Begins :	4:00pm	4:30pm	3:15pm	3:15pm	2:45pm	3:15pm	2:45pm	4:15pm	2:45pm	3:15pm

Lane #1 Weekly 24 Hour Volume Data 10/08/2012 to 10/14/2012

Time	10/08 MON	10/09 TUE	10/10 WED	10/11 THU	10/12 FRI	Weekday Average	10/13 SAT	10/14 SUN	Weekend Average	Week Average
12 - 1	3	4				4				4
1 - 2	1	0				1				1
2 - 3	1	0				1				1
3 - 4	2	2				2				2
4 - 5	2	6				4				4
5 - 6	11	7				9				9
6 - 7	17	21				19				19
7 - 8	43	50				47				47
8 - 9	57	59				58				58
9 - 10	55					55				55
10 - 11	58					58				58
11 - 12	95					95				95
12 - 1	82					82				82
1 - 2	75					75				75
2 - 3	83					83				83
3 - 4	77					77				77
4 - 5	89					89				89
5 - 6	71					71				71
6 - 7	73					73				73
7 - 8	59					59				59
8 - 9	30					30				30
9 - 10	18					18				18
10 - 11	12					12				12
11 - 12	6					6				6
TOTALS :	1020	149				1028				**1028**
% Avg Day :	99%	39%				100%				

AM (12am-10am) Peak Volumes

15 Minute :	26	21	23	23
One Hour :	68	60	65	65
P.H.F. :	0.65	0.71	0.71	0.71
PH Begins :	8:45am	7:30am	8:45am	8:45am

Mid (10am-2pm) Peak Volumes

15 Minute :	28		28	28
One Hour :	96		96	96
P.H.F. :	0.86		0.86	0.86
PH Begins :	11:15am		11:15am	11:15am

PM (2pm-12am) Peak Volumes

15 Minute :	28		28	28
One Hour :	90		90	90
P.H.F. :	0.80		0.80	0.80
PH Begins :	2:15pm		2:15pm	2:15pm

Lane #2 Weekly 24 Hour Volume Data 09/24/2012 to 09/30/2012

Time	09/24 MON	09/25 TUE	09/26 WED	09/27 THU	09/28 FRI	Weekday Average	09/29 SAT	09/30 SUN	Weekend Average	Week Average
12 - 1					12	12	9	6	8	9
1 - 2					1	1	6	8	7	5
2 - 3					1	1	2	2	2	2
3 - 4					1	1	3	3	3	2
4 - 5					8	8	2	5	4	5
5 - 6					8	8	3	3	3	5
6 - 7					18	18	12	7	10	12
7 - 8					46	46	11	10	11	22
8 - 9					62	62	46	37	42	48
9 - 10					66	66	55	51	53	57
10 - 11					58	58	80	54	67	64
11 - 12					92	92	63	70	67	75
12 - 1					90	90	72	66	69	76
1 - 2					76	76	54	48	51	59
2 - 3					95	95	70	61	66	75
3 - 4					82	82	61	51	56	65
4 - 5					87	87	64	57	61	69
5 - 6					75	75	55	48	52	59
6 - 7					54	54	58	50	54	54
7 - 8				14	53	54	66	31	49	50
8 - 9				31	36	34	51	37	44	39
9 - 10				31	30	31	20	22	21	26
10 - 11				12	14	13	16	12	14	14
11 - 12				8	5	7	12	4	8	7
TOTALS :				96	1070	1071	891	743	822	**899**
% Avg Day :				60%	119%	119%	99%	83%	91%	
AM (12am-10am) Peak Volumes										
15 Minute :					20	20	18	18	17	16
One Hour :					68	68	55	58	56	58
P.H.F. :					0.85	0.85	0.76	0.81	0.82	0.91
PH Begins :					7:30am	7:30am	9:00am	8:45am	8:45am	8:45am
Mid (10am-2pm) Peak Volumes										
15 Minute :					30	30	22	19	21	22
One Hour :					103	103	80	70	71	76
P.H.F. :					0.89	0.89	0.95	0.92	0.85	0.86
PH Begins :					12:30pm	12:30pm	10:00am	11:00am	11:45am	12:00pm
PM (2pm-12am) Peak Volumes										
15 Minute :				15	32	32	23	19	21	23
One Hour :				41	98	98	78	63	69	75
P.H.F. :				0.73	0.77	0.77	0.85	0.83	0.82	0.82
PH Begins :				7:45pm	3:15pm	3:15pm	2:15pm	2:30pm	2:15pm	2:00pm

Lane #2 Weekly 24 Hour Volume Data 10/01/2012 to 10/07/2012

Time	10/01 MON	10/02 TUE	10/03 WED	10/04 THU	10/05 FRI	Weekday Average	10/06 SAT	10/07 SUN	Weekend Average	Week Average
12 - 1	2	6	2	7	6	5	7	6	7	5
1 - 2	2	3	1	0	1	1	3	4	4	2
2 - 3	0	3	2	2	1	2	0	3	2	2
3 - 4	4	4	2	2	1	3	0	0	0	2
4 - 5	5	2	5	2	2	3	2	2	2	3
5 - 6	10	14	10	9	6	10	7	5	6	9
6 - 7	26	18	29	15	20	22	7	10	9	18
7 - 8	55	49	42	37	24	41	18	10	14	34
8 - 9	56	59	62	50	57	57	38	18	28	49
9 - 10	78	68	68	66	68	70	45	49	47	63
10 - 11	90	93	87	78	79	85	53	40	47	74
11 - 12	82	62	114	81	86	85	52	45	49	75
12 - 1	100	92	72	84	98	89	59	66	63	82
1 - 2	81	68	94	88	79	82	67	53	60	76
2 - 3	89	98	82	94	100	93	65	50	58	83
3 - 4	88	130	96	76	97	97	69	45	57	86
4 - 5	102	110	95	85	82	95	62	54	58	84
5 - 6	61	106	76	71	69	77	56	53	55	70
6 - 7	58	78	62	67	49	63	49	39	44	57
7 - 8	52	54	44	54	57	52	43	35	39	48
8 - 9	36	33	32	22	28	30	31	29	30	30
9 - 10	39	22	36	26	27	30	26	19	23	28
10 - 11	15	14	15	20	13	15	15	7	11	14
11 - 12	4	4	6	9	13	7	12	5	9	8
TOTALS :	1135	1190	1134	1045	1063	1114	786	647	722	**1002**
% Avg Day :	113%	119%	113%	104%	106%	111%	78%	65%	72%	
AM (12am-10am) Peak Volumes										
15 Minute :	22	22	20	22	23	19	17	15	13	17
One Hour :	79	68	68	66	68	70	46	49	48	63
P.H.F. :	0.90	0.77	0.85	0.75	0.74	0.92	0.68	0.82	0.92	0.93
PH Begins :	8:45am	9:00am	8:45am	9:00am	9:00am	9:00am	8:45am	9:00am	9:00am	9:00am
Mid (10am-2pm) Peak Volumes										
15 Minute :	31	29	32	28	30	25	21	29	20	23
One Hour :	106	93	115	94	100	93	67	75	64	82
P.H.F. :	0.85	0.80	0.90	0.84	0.83	0.93	0.80	0.65	0.80	0.89
PH Begins :	11:45am	10:00am	10:45am	10:30am	11:45am	11:45am	1:00pm	12:30pm	12:00pm	11:45am
PM (2pm-12am) Peak Volumes										
15 Minute :	29	41	32	31	34	28	22	17	17	24
One Hour :	112	134	100	94	106	102	72	59	62	89
P.H.F. :	0.97	0.82	0.78	0.76	0.78	0.91	0.82	0.87	0.91	0.93
PH Begins :	3:45pm	3:15pm	3:15pm	2:00pm	2:45pm	3:15pm	2:30pm	4:15pm	2:45pm	3:15pm

Lane #2 Weekly 24 Hour Volume Data 10/08/2012 to 10/14/2012

Time	10/08 MON	10/09 TUE	10/10 WED	10/11 THU	10/12 FRI	Weekday Average	10/13 SAT	10/14 SUN	Weekend Average	Week Average
12 - 1	3	1				2				2
1 - 2	2	0				1				1
2 - 3	1	2				2				2
3 - 4	2	1				2				2
4 - 5	3	5				4				4
5 - 6	10	9				10				10
6 - 7	27	26				27				27
7 - 8	43	48				46				46
8 - 9	52	58				55				55
9 - 10	61					61				61
10 - 11	62					62				62
11 - 12	93					93				93
12 - 1	68					68				68
1 - 2	75					75				75
2 - 3	97					97				97
3 - 4	97					97				97
4 - 5	85					85				85
5 - 6	76					76				76
6 - 7	75					75				75
7 - 8	58					58				58
8 - 9	32					32				32
9 - 10	24					24				24
10 - 11	15					15				15
11 - 12	5					5				5
TOTALS :	1066	150				1072				**1072**
% Avg Day :	99%	37%				100%				

AM (12am-10am) Peak Volumes

15 Minute :	20	18	20	20
One Hour :	61	58	61	61
P.H.F. :	0.76	0.91	0.76	0.76
PH Begins :	9:00am	7:15am	9:00am	9:00am

Mid (10am-2pm) Peak Volumes

15 Minute :	29		29	29
One Hour :	97		97	97
P.H.F. :	0.84		0.84	0.84
PH Begins :	11:15am		11:15am	11:15am

PM (2pm-12am) Peak Volumes

15 Minute :	30		30	30
One Hour :	104		104	104
P.H.F. :	0.87		0.87	0.87
PH Begins :	2:30pm		2:30pm	2:30pm

Weekly 24 Hour Volume Report: SUBSTATION 12TH

Info Line 1 :
Info Line 2 :
GPS Lat/Lon :

Last Connected Device Type : Apollo
Serial Number : 90552
Lanes : 2

Lane #1 Weekly 24 Hour Volume Data 09/03/2012 to 09/09/2012

Time	09/03 MON	09/04 TUE	09/05 WED	09/06 THU	09/07 FRI	Weekday Average	09/08 SAT	09/09 SUN	Weekend Average	Week Average
12 - 1					12	12	37	32	35	27
1 - 2					4	4	21	20	21	15
2 - 3					4	4	7	16	12	9
3 - 4					15	15	7	13	10	12
4 - 5					5	5	5	4	5	5
5 - 6					9	9	12	10	11	10
6 - 7					26	26	23	17	20	22
7 - 8					77	77	33	37	35	49
8 - 9					108	108	69	43	56	73
9 - 10					113	113	76	65	71	85
10 - 11					109	109	140	98	119	116
11 - 12					145	145	148	127	138	140
12 - 1				123	117	120	158	131	145	132
1 - 2				122	150	136	173	131	152	144
2 - 3				97	156	127	143	153	148	137
3 - 4				192	215	204	193	149	171	187
4 - 5				222	223	223	148	142	145	184
5 - 6				224	229	227	168	151	160	193
6 - 7				226	215	221	150	118	134	177
7 - 8				131	173	152	121	112	117	134
8 - 9				124	138	131	110	103	107	119
9 - 10				116	125	121	95	61	78	99
10 - 11				61	96	79	69	37	53	66
11 - 12				22	77	50	54	27	41	45
TOTALS :				1660	2541	2418	2160	1797	1984	**2180**
% Avg Day :				152%	117%	111%	99%	82%	91%	
AM (12am-10am) Peak Volumes										
15 Minute :					45	45	22	21	21	27
One Hour :					131	131	78	65	72	88
P.H.F. :					0.73	0.73	0.89	0.77	0.86	0.81
PH Begins :					8:15am	8:15am	8:45am	8:45am	8:45am	8:45am
Mid (10am-2pm) Peak Volumes										
15 Minute :				45	45	45	51	39	43	42
One Hour :				133	150	145	179	139	159	146
P.H.F. :				0.74	0.91	0.81	0.88	0.89	0.92	0.87
PH Begins :				12:30pm	1:00pm	11:00am	12:45pm	12:15pm	12:45pm	12:30pm
PM (2pm-12am) Peak Volumes										
15 Minute :				63	69	65	54	46	50	51
One Hour :				236	241	236	193	166	175	195
P.H.F. :				0.94	0.87	0.91	0.89	0.90	0.88	0.98
PH Begins :				5:30pm	4:15pm	4:15pm	3:00pm	2:45pm	2:45pm	4:45pm

Lane #1 Weekly 24 Hour Volume Data 09/10/2012 to 09/16/2012

Time	09/10 MON	09/11 TUE	09/12 WED	09/13 THU	09/14 FRI	Weekday Average	09/15 SAT	09/16 SUN	Weekend Average	Week Average
12 - 1	9	10	20	8		12				12
1 - 2	3	7	7	9		7				7
2 - 3	2	1	8	5		4				4
3 - 4	5	8	8	7		7				7
4 - 5	3	5	7	6		5				5
5 - 6	10	9	7	12		10				10
6 - 7	27	24	31	21		26				26
7 - 8	84	72	69	78		76				76
8 - 9	119	124	125	78		112				112
9 - 10	93	106	91			97				97
10 - 11	104	93	67			88				88
11 - 12	98	100	101			100				100
12 - 1	109	158	103			123				123
1 - 2	114	124	100			113				113
2 - 3	132	139	165			145				145
3 - 4	184	183	132			166				166
4 - 5	182	182	212			192				192
5 - 6	219	222	240			227				227
6 - 7	244	209	247			233				233
7 - 8	150	145	145			147				147
8 - 9	112	123	143			126				126
9 - 10	77	97	79			84				84
10 - 11	44	53	58			52				52
11 - 12	33	25	25			28				28
TOTALS :	2157	2219	2190	224		2180				**2180**
% Avg Day :	99%	102%	100%	27%		100%				

AM (12am-10am) Peak Volumes

15 Minute :	38	35	38	31	32	32
One Hour :	119	124	125	107	113	113
P.H.F. :	0.78	0.89	0.82	0.86	0.88	0.88
PH Begins :	8:00am	8:00am	8:00am	7:30am	8:15am	8:15am

Mid (10am-2pm) Peak Volumes

15 Minute :	39	48	35		38	38
One Hour :	117	158	113		123	123
P.H.F. :	0.75	0.82	0.81		0.81	0.81
PH Begins :	12:45pm	12:00pm	11:15am		12:00pm	12:00pm

PM (2pm-12am) Peak Volumes

15 Minute :	69	70	68		65	65
One Hour :	244	237	247		241	241
P.H.F. :	0.88	0.85	0.91		0.93	0.93
PH Begins :	6:00pm	5:45pm	6:00pm		5:45pm	5:45pm

Lane #2 Weekly 24 Hour Volume Data 09/03/2012 to 09/09/2012

Time	09/03 MON	09/04 TUE	09/05 WED	09/06 THU	09/07 FRI	Weekday Average	09/08 SAT	09/09 SUN	Weekend Average	Week Average
12 - 1					2	2	8	15	12	8
1 - 2					4	4	1	13	7	6
2 - 3					6	6	3	3	3	4
3 - 4					10	10	4	5	5	6
4 - 5					12	12	8	4	6	8
5 - 6					68	68	24	17	21	36
6 - 7					130	130	44	25	35	66
7 - 8					195	195	88	33	61	105
8 - 9					138	138	101	65	83	101
9 - 10					150	150	141	113	127	135
10 - 11					141	141	145	152	149	146
11 - 12					117	117	136	132	134	128
12 - 1				135	161	148	138	149	144	146
1 - 2				109	138	124	147	156	152	138
2 - 3				109	120	115	151	177	164	139
3 - 4				140	165	153	153	142	148	150
4 - 5				147	161	154	151	145	148	151
5 - 6				128	161	145	121	117	119	132
6 - 7				136	147	142	110	99	105	123
7 - 8				83	102	93	76	102	89	91
8 - 9				73	85	79	84	84	84	82
9 - 10				49	57	53	74	64	69	61
10 - 11				24	29	27	42	31	37	32
11 - 12				9	20	15	28	8	18	16
TOTALS :				1142	2319	2221	1978	1851	1920	**2010**
% Avg Day :				114%	115%	110%	98%	92%	96%	
AM (12am-10am) Peak Volumes										
15 Minute :					58	58	41	32	34	38
One Hour :					203	203	141	113	128	135
P.H.F. :					0.88	0.88	0.86	0.88	0.94	0.89
PH Begins :					6:45am	6:45am	9:00am	9:00am	9:00am	8:45am
Mid (10am-2pm) Peak Volumes										
15 Minute :				42	53	43	45	44	42	40
One Hour :				135	161	149	157	156	153	147
P.H.F. :				0.80	0.76	0.87	0.89	0.89	0.91	0.92
PH Begins :				12:00pm	12:00pm	11:45am	10:30am	1:00pm	1:00pm	10:00am
PM (2pm-12am) Peak Volumes										
15 Minute :				43	58	51	47	51	46	45
One Hour :				148	183	167	165	177	167	159
P.H.F. :				0.86	0.79	0.82	0.88	0.87	0.91	0.88
PH Begins :				3:45pm	3:45pm	3:45pm	2:15pm	2:00pm	2:15pm	3:45pm

Lane #2 Weekly 24 Hour Volume Data 09/10/2012 to 09/16/2012

Time	09/10 MON	09/11 TUE	09/12 WED	09/13 THU	09/14 FRI	Weekday Average	09/15 SAT	09/16 SUN	Weekend Average	Week Average
12 - 1	1	4	4	4		3				3
1 - 2	4	4	8	3		5				5
2 - 3	2	3	4	5		4				4
3 - 4	9	9	6	7		8				8
4 - 5	20	19	17	17		18				18
5 - 6	66	70	69	61		67				67
6 - 7	160	149	159	167		159				159
7 - 8	192	205	197	205		200				200
8 - 9	143	143	132	107		131				131
9 - 10	139	139	139			139				139
10 - 11	100	127	112			113				113
11 - 12	125	108	106			113				113
12 - 1	118	146	92			119				119
1 - 2	111	112	102			108				108
2 - 3	98	110	133			114				114
3 - 4	127	127	122			125				125
4 - 5	127	141	133			134				134
5 - 6	143	160	144			149				149
6 - 7	109	109	121			113				113
7 - 8	87	109	114			103				103
8 - 9	73	53	84			70				70
9 - 10	50	46	43			46				46
10 - 11	26	17	19			21				21
11 - 12	12	5	12			10				10
TOTALS :	2042	2115	2072	576		2072				**2072**
% Avg Day :	99%	102%	100%	74%		100%				

AM (12am-10am) Peak Volumes

15 Minute :	62	62	66	66	64	64
One Hour :	196	205	210	216	208	208
P.H.F. :	0.79	0.83	0.80	0.82	0.81	0.81
PH Begins :	6:45am	7:00am	6:45am	6:45am	6:45am	6:45am

Mid (10am-2pm) Peak Volumes

15 Minute :	37	41	33		33	33
One Hour :	137	146	112		126	126
P.H.F. :	0.93	0.89	0.85		0.95	0.95
PH Begins :	11:30am	12:00pm	10:00am		11:30am	11:30am

PM (2pm-12am) Peak Volumes

15 Minute :	46	49	45		42	42
One Hour :	147	166	155		155	155
P.H.F. :	0.94	0.85	0.86		0.92	0.92
PH Begins :	4:30pm	4:30pm	4:45pm		4:45pm	4:45pm

Appendix G

Asphalt Distress Rating Sheet

THIS PAGE INTENTIONALLY LEFT BLANK

ASPHALT DISTRESS RATING SHEET

FATIGUE CRACKING

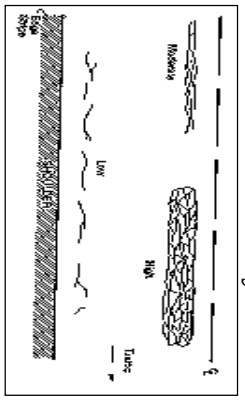

	Extent		
	Low	**Medium**	**High**
0 None	1 Crack WP or 1' off C&G Length	2 Crack WP or 1'-2' off C&G Length	>30% of Surface Area or Length
Low Cracks < 1/4"	1	2	3
Medium Cracks 1/4"to 3/4"	4	5	6
High Cracks > 3/4"	7	8	9

Severity

BLOCK CRACKING

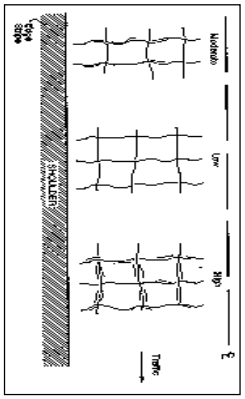

	Extent		
	Low	**Medium**	**High**
0 None	> 15'x15' Squares	15'-10'x Squares	< 10'x10' Squares
Low Cracks < 1/4"	1	2	3
Medium Cracks 1/4"to 3/4"	4	5	6
High Cracks > 3/4"	7	8	9

Severity

LONGITUDINAL CRACKING

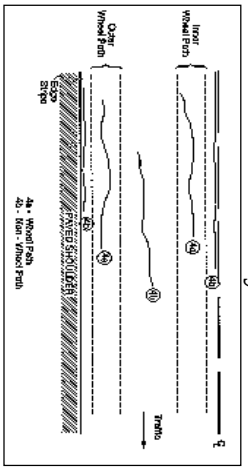

	Extent		
	Low	**Medium**	**High**
0 None	1 Crack Full Length	2 Cracks Full Length	> 2 Cracks Full Length
Low Cracks < 1/4"	1	2	3
Medium Cracks 1/4"to 3/4"	4	5	6
High Cracks > 3/4"	7	8	9

Severity

UTILITY CUTS

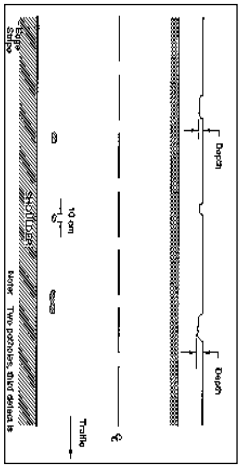

	Extent		
	Low	**Medium**	**High**
0 None	0-10% of Length	10-30% of Length	>30% of Length
Low Cracks < 1/4"	1	2	3
Medium Cracks 1/4"to 3/4"	4	5	6
High Cracks > 3/4"	7	8	9

Note: to rate potholes use the same form with the following changes to the severity: **Low** is <1" deep, **Med** is 1"-2" deep and **High** is >2"

Severity

TRANSVERSE CRACKING

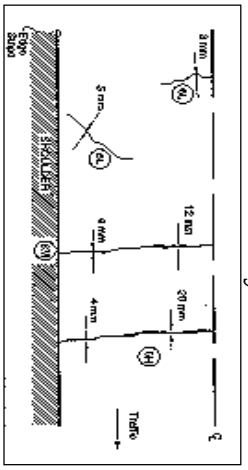

	Extent		
	Low	**Medium**	**High**
0 None	> 100' between Cracks	100'-20' between Cracks	< 20' between Cracks
Low Cracks < 1/4"	1	2	3
Medium Cracks 1/4"to 3/4"	4	5	6
High Cracks > 3/4"	7	8	9

Severity

EDGE CRACKING

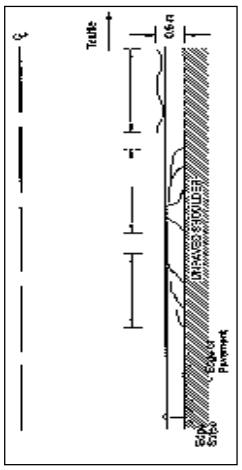

	Extent		
	Low	**Medium**	**High**
0 None	0-10% of Length	10-30% of Length	> 30% of Length
Low 0-6" from Curb	1	2	3
Medium 6-18" from Curb	4	5	6
High 18" from Curb	7	8	9

Severity

Drainage / Roughness

Excellent	Good	Fair	Poor

Rutting

Excellent 0	Low <3/8"	Med 1/2"-3/4"	High >3/4"

THIS PAGE INTENTIONALLY LEFT BLANK

Appendix H

Road Inventory

THIS PAGE INTENTIONALLY LEFT BLANK

Segment ID	Road Name	From Address	To Address	Current RSL	Length (ft)	Width (ft)	Rating Date	Fatigue	Transverse	Longitudinal	Patching	Edge	Recommended Treatment
382	10 ST	GEMSTONE WAY	END	12	163	32	10/9/2014	0:NONE	0:NONE	0:NONE	4:MED-LOW	0:NONE	No Maintenance
385	10 ST	S BOISE AVE	S COMMERCIAL AVE	4	357	32	10/9/2014	6:MED-HIGH	6:MED-HIGH	0:NONE	9:HIGH-HIGH	4:MED-LOW	Rebuild/Thick Overlay
387	10 ST	S COMMERCIAL AVE	S WASHINGTON AVE	6	362	32	10/9/2014	3:LOW-HIGH	4:MED-LOW	0:NONE	7:HIGH-LOW	6:MED-HIGH	Patching
210	3RD ST	S. DECLARK	HAZEL AVE	6	433	32	10/9/2014	3:LOW-HIGH	3:LOW-HIGH	1:LOW-LOW	0:NONE	0:NONE	Chip Seal
211	3RD ST	HAZEL AVE	S. JOHNS AVE	6	565	32	10/9/2014	3:LOW-HIGH	6:MED-HIGH	1:LOW-LOW	0:NONE	2:LOW-MED	Chip Seal
213	3RD ST	MOFFAT AVE	S. DECLARK	6	351	32	10/9/2014	2:LOW-MED	2:LOW-MED	0:NONE	2:LOW-MED	6:MED-HIGH	Patching
214	3RD ST	BUTTE AVE	MOFFAT AVE	6	354	32	10/9/2014	3:LOW-HIGH	0:NONE	0:NONE	0:NONE	0:NONE	Chip Seal
216	3RD ST	PINE AVE	BUTTE AVE	8	364	32	10/9/2014	2:LOW-MED	5:MED-MED	0:NONE	0:NONE	2:LOW-MED	Chip Seal
220	3RD ST	MURRAY AVE	WILSON AVE	14	364	32	10/9/2014	0:NONE	0:NONE	0:NONE	1:LOW-LOW	0:NONE	No Maintenance
222	3RD ST	LINCOLN AVE	MURRAY AVE	20	352	32	10/9/2014	0:NONE	0:NONE	0:NONE	0:NONE	0:NONE	No Maintenance
226	3RD ST	S WASHINGTON AVE	S COMMERCIAL AVE	20	359	32	10/9/2014	0:NONE	0:NONE	0:NONE	0:NONE	0:NONE	No Maintenance
227	3RD ST	S COMMERCIAL AVE	S BOISE AVE	6	353	32	10/9/2014	7:HIGH-LOW	0:NONE	1:LOW-LOW	0:NONE	0:NONE	Patching
228	3RD ST	S. JOHNS AVE	S. HAWTHORNE AVE	2	435	32	10/9/2014	8:HIGH-MED	9:HIGH-HIGH	0:NONE	3:LOW-HIGH	3:LOW-HIGH	Rebuild/Thick Overlay
230	3RD ST	S HAYES AVE	S WASHINGTON AVE	12	364	32	10/9/2014	0:NONE	1:LOW-LOW	1:LOW-LOW	0:NONE	0:NONE	No Maintenance
232	3RD ST	WILSON AVE	END	12	241	32	10/9/2014	0:NONE	0:NONE	0:NONE	4:MED-LOW	0:NONE	No Maintenance
233	3RD ST	S WARDWELL AVE	S HAYES AVE	4	379	32	10/9/2014	5:MED-MED	9:HIGH-HIGH	0:NONE	2:LOW-MED	3:LOW-HIGH	Overlay
235	3RD ST	S MCKINLEY AVE	S WARDWELL AVE	4	382	32	10/9/2014	6:MED-HIGH	6:MED-HIGH	0:NONE	0:NONE	0:NONE	Rebuild/Thick Overlay
236	3RD ST	S. HAWTHORNE AVE	S MCKINLEY AVE	2	371	32	10/9/2014	8:HIGH-MED	9:HIGH-HIGH	0:NONE	3:LOW-HIGH	0:NONE	Rebuild/Thick Overlay
239	4TH ST	W MAIN ST	MCAULIFFE AVE	20	1149	32	10/9/2014	0:NONE	0:NONE	0:NONE	0:NONE	0:NONE	No Maintenance
241	4TH ST	MCAULIFFE AVE	WILSON AVE	10	359	32	10/9/2014	0:NONE	0:NONE	0:NONE	0:NONE	2:LOW-MED	Crack Seal
242	4TH ST	WILSON AVE	WILLIAMS RD	12	162	32	10/9/2014	0:NONE	1:LOW-LOW	0:NONE	0:NONE	0:NONE	No Maintenance
244	4TH ST	WILLIAMS RD	MURRAY AVE	8	198	32	10/9/2014	0:NONE	3:LOW-HIGH	0:NONE	0:NONE	0:NONE	Chip Seal
247	4TH ST	LINCOLN AVE	S BOISE AVE	6	134	32	10/9/2014	7:HIGH-LOW	8:HIGH-MED	0:NONE	0:NONE	0:NONE	Overlay
249	4TH ST	S BOISE AVE	S COMMERCIAL AVE	8	351	32	10/9/2014	0:NONE	7:HIGH-LOW	0:NONE	0:NONE	2:LOW-MED	Patching
251	4TH ST	MURRAY AVE	LINCOLN AVE	20	364	32	10/9/2014	0:NONE	0:NONE	0:NONE	0:NONE	0:NONE	No Maintenance
252	4TH ST	S COMMERCIAL AVE	S WASHINGTON AVE	12	357	32	10/9/2014	0:NONE	1:LOW-LOW	0:NONE	0:NONE	0:NONE	No Maintenance
254	4TH ST	S WASHINGTON AVE	S HAYES AVE	8	364	32	10/9/2014	0:NONE	7:HIGH-LOW	0:NONE	0:NONE	0:NONE	Patching
256	4TH ST	S HAYES AVE	S WARDWELL AVE	6	374	32	10/9/2014	7:HIGH-LOW	7:HIGH-LOW	0:NONE	0:NONE	0:NONE	Patching
258	4TH ST	S WARDWELL AVE	S MCKINLEY AVE	0	386	32	10/9/2014	9:HIGH-HIGH	9:HIGH-HIGH	7:HIGH-LOW	9:HIGH-HIGH	0:NONE	Rebuild/Thick Overlay
259	4TH ST	S MCKINLEY AVE	S. HAWTHORNE AVE	4	380	32	10/9/2014	6:MED-HIGH	0:NONE	0:NONE	9:HIGH-HIGH	0:NONE	Rebuild/Thick Overlay
261	4TH ST	S. HAWTHORNE AVE	S. JOHNS AVE	2	427	32	10/9/2014	8:HIGH-MED	8:HIGH-MED	0:NONE	9:HIGH-HIGH	0:NONE	Rebuild/Thick Overlay
263	4TH ST	S. JOHNS AVE	HAZEL AVE	6	559	32	10/9/2014	5:MED-MED	8:HIGH-MED	1:LOW-LOW	0:NONE	0:NONE	Overlay
264	4TH ST	HAZEL AVE	S. DECLARK	6	309	32	10/9/2014	3:LOW-HIGH	5:MED-MED	4:MED-LOW	0:NONE	2:LOW-MED	Chip Seal
267	4TH ST	S. DECLARK	MOFFAT AVE	6	351	32	10/9/2014	5:MED-MED	5:MED-MED	0:NONE	7:HIGH-LOW	0:NONE	Overlay
268	4TH ST	MOFFAT AVE	MEADOW DR	6	283	32	10/9/2014	3:LOW-HIGH	6:MED-HIGH	1:LOW-LOW	7:HIGH-LOW	0:NONE	Chip Seal
270	4TH ST	MEADOW DR	BUTTE AVE	6	66	32	10/9/2014	3:LOW-HIGH	6:MED-HIGH	0:NONE	0:NONE	0:NONE	Chip Seal
271	4TH ST	S. DECLARK	S. DECLARK	6	129	32	10/9/2014	3:LOW-HIGH	5:MED-MED	4:MED-LOW	0:NONE	2:LOW-MED	Chip Seal
273	4TH ST	BUTTE AVE	PINE AVE	6	367	32	10/9/2014	2:LOW-MED	6:MED-HIGH	0:NONE	7:HIGH-LOW	0:NONE	Chip Seal
274	4TH ST	PINE AVE	MONTE VISTA DR	6	395	32	10/9/2014	2:LOW-MED	6:MED-HIGH	0:NONE	7:HIGH-LOW	3:LOW-HIGH	Chip Seal
275	4TH ST	MONTE VISTA DR	END	2	806	32	10/9/2014	8:HIGH-MED	6:MED-HIGH	7:HIGH-LOW	8:HIGH-MED	3:LOW-HIGH	Rebuild/Thick Overlay
279	5TH ST	MURRAY AVE	WILLIAMS RD	6	254	32	10/9/2014	3:LOW-HIGH	0:NONE	0:NONE	0:NONE	3:LOW-HIGH	Chip Seal
281	5TH ST	LINCOLN AVE	MURRAY AVE	6	367	32	10/9/2014	3:LOW-HIGH	2:LOW-MED	0:NONE	1:LOW-LOW	3:LOW-HIGH	Chip Seal
284	5TH ST	S COMMERCIAL AVE	S BOISE AVE	6	349	32	10/9/2014	3:LOW-HIGH	3:LOW-HIGH	0:NONE	6:MED-HIGH	0:NONE	Chip Seal
286	5TH ST	S WASHINGTON AVE	S COMMERCIAL AVE	2	359	32	10/9/2014	8:HIGH-MED	5:MED-MED	0:NONE	4:MED-LOW	7:HIGH-LOW	Rebuild/Thick Overlay
288	5TH ST	S HAYES AVE	S WASHINGTON AVE	4	361	32	10/9/2014	6:MED-HIGH	3:LOW-HIGH	7:HIGH-LOW	7:HIGH-LOW	9:HIGH-HIGH	Rebuild/Thick Overlay
289	5TH ST	END	S HAYES AVE	10	245	32	10/9/2014	0:NONE	2:LOW-MED	0:NONE	3:LOW-HIGH	0:NONE	Chip Seal
291	5TH ST	S. HAWTHORNE AVE	END	10	334	32	10/9/2014	1:LOW-LOW	0:NONE	0:NONE	7:HIGH-LOW	0:NONE	Patching
293	5TH ST	S. JOHNS AVE	S. HAWTHORNE AVE	10	427	32	10/9/2014	1:LOW-LOW	1:LOW-LOW	0:NONE	7:HIGH-LOW	1:LOW-LOW	Patching
295	5TH ST	HAZEL AVE	S. JOHNS AVE	6	573	32	10/9/2014	3:LOW-HIGH	3:LOW-HIGH	0:NONE	6:MED-HIGH	0:NONE	Chip Seal
297	5TH ST	S. DECLARK	HAZEL AVE	6	296	32	10/9/2014	3:LOW-HIGH	3:LOW-HIGH	0:NONE	5:MED-MED	6:MED-HIGH	Patching
298	5TH ST	END	S. DECLARK	6	139	32	10/9/2014	3:LOW-HIGH	3:LOW-HIGH	0:NONE	2:LOW-MED	5:MED-MED	Chip Seal
305	6TH ST	WILLIAMS RD	END	8	549	32	10/9/2014	2:LOW-MED	3:LOW-HIGH	0:NONE	4:MED-LOW	3:LOW-HIGH	Crack Seal
307	6TH ST	S COMMERCIAL AVE	S BOISE AVE	6	346	32	10/9/2014	5:MED-MED	5:MED-MED	0:NONE	5:MED-MED	5:MED-MED	Overlay
309	6TH ST	S WASHINGTON AVE	S COMMERCIAL AVE	4	364	32	10/9/2014	6:MED-HIGH	6:MED-HIGH	0:NONE	5:MED-MED	6:MED-HIGH	Rebuild/Thick Overlay
311	6TH ST	S HAYES AVE	S WASHINGTON AVE	4	356	32	10/9/2014	6:MED-HIGH	9:HIGH-HIGH	0:NONE	8:HIGH-MED	0:NONE	Overlay
314	6TH ST	S WARDWELL AVE	S HAYES AVE	6	375	32	10/9/2014	3:LOW-HIGH	5:MED-MED	0:NONE	8:HIGH-MED	0:NONE	Chip Seal

Segment ID	Road Name	From Address	To Address	Current RSL	Length (ft)	Width (ft)	Rating Date	Fatigue	Transverse	Longitudinal	Patching	Edge	Recommended Treatment
316	6TH ST	S. HAWTHORNE AVE	END	10	312	32	10/9/2014	0:NONE	0:NONE	0:NONE	2:LOW-MED	2:LOW-MED	Crack Seal
318	6TH ST	S. JOHNS AVE	S. HAWTHORNE AVE	8	426	32	10/9/2014	1:LOW-LOW	3:LOW-HIGH	0:NONE	0:NONE	0:NONE	Chip Seal
602	6TH ST	OLD GLORY RD	S JOHNS AVE	20	427	32	5/22/2014	0:NONE	0:NONE	0:NONE	0:NONE	0:NONE	No Maintenance
341	7TH ST	S WARDWELL AVE	END	4	154	32	10/9/2014	6:MED-HIGH	5:MED-MED	0:NONE	9:HIGH-HIGH	9:HIGH-HIGH	Rebuild/Thick Overlay
343	7TH ST	OLD GLORY	LYNN DR	6	135	32	10/9/2014	2:LOW-MED	3:LOW-HIGH	0:NONE	3:LOW-HIGH	8:HIGH-MED	Overlay
344	7TH ST	S MCKINLEY AVE	S WARDWELL AVE	4	362	32	10/9/2014	3:LOW-HIGH	9:HIGH-HIGH	0:NONE	8:HIGH-MED	9:HIGH-HIGH	Rebuild/Thick Overlay
346	7TH ST	S. HAWTHORNE AVE	S MCKINLEY AVE	4	399	32	10/9/2014	2:LOW-MED	6:MED-HIGH	0:NONE	5:MED-MED	9:HIGH-HIGH	Rebuild/Thick Overlay
347	7TH ST	LYNN DR	S. JOHNS AVE	6	333	32	10/9/2014	2:LOW-MED	3:LOW-HIGH	0:NONE	3:LOW-HIGH	8:HIGH-MED	Overlay
349	7TH ST	S. JOHNS AVE	S. HAWTHORNE AVE	6	425	32	10/9/2014	2:LOW-MED	3:LOW-HIGH	0:NONE	3:LOW-HIGH	8:HIGH-MED	Overlay
350	7TH ST	MOFFAT AVE	OLD GLORY	8	853	32	10/9/2014	2:LOW-MED	3:LOW-HIGH	0:NONE	0:NONE	3:LOW-HIGH	Crack Seal
365	ALBERTA AVE	S. PLAZA RD	GALA TR	10	543	32	10/9/2014	0:NONE	4:MED-LOW	0:NONE	4:MED-LOW	1:LOW-LOW	Crack Seal
440	AMERICAN AVE	INDEPENDENCE LN	E 12TH ST	12	145	32	10/9/2014	0:NONE	1:LOW-LOW	0:NONE	0:NONE	0:NONE	No Maintenance
448	AMERICAN AVE	FREEDOM LN	INDEPENDENCE LN	14	212	32	10/9/2014	0:NONE	0:NONE	0:NONE	1:LOW-LOW	0:NONE	No Maintenance
453	AMERICAN AVE	LIBERTY LN	FREEDOM LN	12	212	32	10/9/2014	0:NONE	1:LOW-LOW	0:NONE	1:LOW-LOW	0:NONE	No Maintenance
460	AMERICAN AVE	END	LIBERTY LN	12	93	32	10/9/2014	0:NONE	1:LOW-LOW	0:NONE	1:LOW-LOW	0:NONE	No Maintenance
511	APACHE ST	S MILL RD	COMANCHE TR	20	379	32	5/22/2014	0:NONE	0:NONE	0:NONE	0:NONE	0:NONE	No Maintenance
512	APACHE ST	COMANCHE TR	SIOUX AVE	12	276	32	5/22/2014	0:NONE	1:LOW-LOW	0:NONE	0:NONE	0:NONE	No Maintenance
26	BARTON ST	N BOISE AVE	END	0	173	32	0	0	0	0	0	0	0
27	BARTON ST	N WASHINGTON AVE	N COMMERCIAL AVE	0	365	32	10/9/2014	9:HIGH-HIGH	0:NONE	0:NONE	4:MED-LOW	0:NONE	Rebuild/Thick Overlay
28	BARTON ST	N COMMERCIAL AVE	N BOISE AVE	4	358	32	10/9/2014	3:LOW-HIGH	9:HIGH-HIGH	7:HIGH-LOW	0:NONE	0:NONE	Overlay
80	BASQUE LN	RIGGS ST	END	6	378	32	10/9/2014	3:LOW-HIGH	6:MED-HIGH	7:HIGH-LOW	1:LOW-LOW	2:LOW-MED	Chip Seal
72	BLAINE ST	END	PINE AVE	4	255	32	10/9/2014	6:MED-HIGH	6:MED-HIGH	1:LOW-LOW	4:MED-LOW	6:MED-HIGH	Rebuild/Thick Overlay
75	BLAINE ST	PINE AVE	RIGGS ST	6	870	32	10/9/2014	3:LOW-HIGH	2:LOW-MED	0:NONE	6:MED-HIGH	5:MED-MED	Chip Seal
76	BLAINE ST	RIGGS ST	RIGGS ST	4	170	32	10/9/2014	6:MED-HIGH	4:MED-LOW	0:NONE	8:HIGH-MED	3:LOW-HIGH	Rebuild/Thick Overlay
5	BUTTE AVE	END	END	4	138	32	10/9/2014	6:MED-HIGH	9:HIGH-HIGH	4:MED-LOW	8:HIGH-MED	9:HIGH-HIGH	Rebuild/Thick Overlay
19	BUTTE AVE	END	FERNLEE ST	6	292	32	10/9/2014	3:LOW-HIGH	6:MED-HIGH	0:NONE	0:NONE	6:MED-HIGH	Patching
43	BUTTE AVE	FERNLEE ST	E. LOCUST ST	4	615	32	10/9/2014	6:MED-HIGH	3:LOW-HIGH	1:LOW-LOW	7:HIGH-LOW	5:MED-MED	Rebuild/Thick Overlay
162	BUTTE AVE	E MAIN ST	E 1ST ST	12	365	32	10/9/2014	0:NONE	1:LOW-LOW	1:LOW-LOW	0:NONE	0:NONE	No Maintenance
202	BUTTE AVE	E 1ST ST	E 2ND ST	12	368	32	10/9/2014	0:NONE	1:LOW-LOW	0:NONE	0:NONE	0:NONE	No Maintenance
207	BUTTE AVE	E 2ND ST	3RD ST	4	327	32	10/9/2014	6:MED-HIGH	6:MED-HIGH	0:NONE	5:MED-MED	0:NONE	Rebuild/Thick Overlay
269	BUTTE AVE	3RD ST	4TH ST	6	328	32	10/9/2014	1:LOW-LOW	0:NONE	0:NONE	7:HIGH-LOW	6:MED-HIGH	Patching
18	BUTTE SHADOW ST	LORAINE CIR	END	2	422	32	10/9/2014	8:HIGH-MED	7:HIGH-LOW	0:NONE	7:HIGH-LOW	9:HIGH-HIGH	Rebuild/Thick Overlay
32	BUTTE VIEW CIR	SHADOW RIDGE CIR	END	4	291	32	10/9/2014	6:MED-HIGH	0:NONE	0:NONE	2:LOW-MED	9:HIGH-HIGH	Rebuild/Thick Overlay
77	CANAL ST	N WASHINGTON AVE	DION ST	4	461	32	10/9/2014	6:MED-HIGH	0:NONE	0:NONE	6:MED-HIGH	6:MED-HIGH	Rebuild/Thick Overlay
82	CANAL ST	N COMMERCIAL AVE	N WASHINGTON AVE	10	377	32	10/9/2014	0:NONE	4:MED-LOW	4:MED-LOW	4:MED-LOW	0:NONE	Crack Seal
85	CANAL ST	N BOISE AVE	N COMMERCIAL AVE	20	360	32	10/9/2014	0:NONE	0:NONE	0:NONE	0:NONE	0:NONE	No Maintenance
118	CANAL ST	W MAIN ST	N BOISE AVE	8	1067	32	10/9/2014	2:LOW-MED	7:HIGH-LOW	0:NONE	7:HIGH-LOW	7:HIGH-LOW	Patching
10	CARSON ST	N BOISE AVE	N COMMERCIAL AVE	8	353	32	10/9/2014	0:NONE	5:MED-MED	0:NONE	4:MED-LOW	0:NONE	Chip Seal
12	CARSON ST	N COMMERCIAL AVE	N WASHINGTON AVE	8	356	32	10/9/2014	0:NONE	7:HIGH-LOW	0:NONE	8:HIGH-MED	0:NONE	Overlay
355	CASCDE ST	SHASTA DR	END	4	125	32	10/9/2014	3:LOW-HIGH	3:LOW-HIGH	0:NONE	4:MED-LOW	9:HIGH-HIGH	Rebuild/Thick Overlay
357	CASCDE ST	MONTE VISTA DR	RAINIER DR	4	213	32	10/9/2014	3:LOW-HIGH	3:LOW-HIGH	0:NONE	4:MED-LOW	9:HIGH-HIGH	Rebuild/Thick Overlay
358	CASCDE ST	RAINIER DR	SHASTA DR	4	496	32	10/9/2014	3:LOW-HIGH	3:LOW-HIGH	0:NONE	2:LOW-MED	9:HIGH-HIGH	Rebuild/Thick Overlay
516	COMANCHE TR	SIOUX AVE	APACHE ST	10	574	32	5/22/2014	1:LOW-LOW	1:LOW-LOW	0:NONE	0:NONE	0:NONE	No Maintenance
438	CONSTITUTION LN	E 12TH ST	INDEPENDENCE LN	20	137	32	10/9/2014	0:NONE	0:NONE	0:NONE	0:NONE	0:NONE	No Maintenance
446	CONSTITUTION LN	INDEPENDENCE LN	FREEDOM LN	6	210	32	10/9/2014	2:LOW-MED	6:MED-HIGH	0:NONE	0:NONE	0:NONE	Chip Seal
450	CONSTITUTION LN	FREEDOM LN	LIBERTY LN	10	214	32	10/9/2014	1:LOW-LOW	0:NONE	0:NONE	0:NONE	0:NONE	No Maintenance
459	CONSTITUTION LN	LIBERTY LN	END	12	85	32	10/9/2014	0:NONE	1:LOW-LOW	0:NONE	0:NONE	0:NONE	No Maintenance
402	CRYSTAL CR DR	PINYON PEAK ST	CRYSTAL LOOP	6	248	32	10/9/2014	3:LOW-HIGH	1:LOW-LOW	0:NONE	0:NONE	0:NONE	Chip Seal
433	CRYSTAL CR DR	EAST 12TH ST	PINYON PEAK ST	8	215	32	10/9/2014	2:LOW-MED	5:MED-MED	4:MED-LOW	0:NONE	0:NONE	Chip Seal
396	CRYSTAL LOOP	CRYSTAL CR DR	CRYSTAL CR DR	10	669	32	10/9/2014	0:NONE	4:MED-LOW	0:NONE	4:MED-LOW	0:NONE	Crack Seal
81	DEWEY ST	N MCKINLEY AVE	N. JOHNS AVE	6	821	32	10/9/2014	3:LOW-HIGH	3:LOW-HIGH	0:NONE	2:LOW-MED	6:MED-HIGH	Patching
60	DION ST	END	N BOISE AVE	6	181	32	10/9/2014	3:LOW-HIGH	0:NONE	0:NONE	7:HIGH-LOW	0:NONE	Chip Seal
62	DION ST	N COMMERCIAL AVE	N WASHINGTON AVE	4	363	32	10/9/2014	0:NONE	9:HIGH-HIGH	0:NONE	0:NONE	9:HIGH-HIGH	Rebuild/Thick Overlay
63	DION ST	N BOISE AVE	N COMMERCIAL AVE	12	363	32	10/9/2014	0:NONE	1:LOW-LOW	0:NONE	0:NONE	0:NONE	No Maintenance
65	DION ST	CANAL ST	N WASHINGTON AVE	4	349	32	10/9/2014	3:LOW-HIGH	3:LOW-HIGH	0:NONE	4:MED-LOW	9:HIGH-HIGH	Rebuild/Thick Overlay
66	DION ST	N WARDWELL AVE	CANAL ST	4	260	32	10/9/2014	3:LOW-HIGH	3:LOW-HIGH	0:NONE	4:MED-LOW	9:HIGH-HIGH	Rebuild/Thick Overlay

Segment ID	Road Name	From Address	To Address	Current RSL	Length (ft)	Width (ft)	Rating Date	Fatigue	Transverse	Longitudinal	Patching	Edge	Recommended Treatment
507	DITTMAN DR	HOMESTEAD DR	END	8	937	32	5/22/2014	0:NONE	7:HIGH-LOW	0:NONE	0:NONE	0:NONE	Patching
508	DITTMAN DR	KAETZEL WAY	S MILL RD	12	768	32	5/22/2014	0:NONE	0:NONE	0:NONE	2:LOW-MED	0:NONE	No Maintenance
531	DUCHESS TR	QUEEN ANN AVE	MARIPOSA DR	12	281	30	8/5/2014	0:NONE	1:LOW-LOW	0:NONE	0:NONE	0:NONE	No Maintenance
532	DUCHESS TR	MARIPOSA CT	END	12	104	30	5/22/2014	0:NONE	1:LOW-LOW	0:NONE	0:NONE	0:NONE	No Maintenance
388	E 10TH ST	S HAYES AVE	END	0	238	32	10/9/2014	9:HIGH-HIGH	0:NONE	0:NONE	9:HIGH-HIGH	0:NONE	Rebuild/Thick Overlay
421	E 12TH ST	S WASHINGTON AVE	S HAYES AVE	4	352	32	10/9/2014	3:LOW-HIGH	9:HIGH-HIGH	1:LOW-LOW	3:LOW-HIGH	1:LOW-LOW	Overlay
423	E 12TH ST	S. JOHNS AVE	CONSTITUTION LN	8	584	32	10/9/2014	2:LOW-MED	1:LOW-LOW	2:LOW-MED	0:NONE	0:NONE	Chip Seal
425	E 12TH ST	S HAYES AVE	JUDD LN	4	906	32	10/9/2014	3:LOW-HIGH	9:HIGH-HIGH	0:NONE	7:HIGH-LOW	6:MED-HIGH	Overlay
426	E 12TH ST	CONSTITUTION LN	AMERICAN AVE	8	646	32	10/9/2014	2:LOW-MED	0:NONE	1:LOW-LOW	0:NONE	2:LOW-MED	Chip Seal
427	E 12TH ST	AMERICAN AVE	EAST 12TH ST	10	102	32	10/9/2014	0:NONE	2:LOW-MED	1:LOW-LOW	0:NONE	0:NONE	Crack Seal
429	E 12TH ST	JUDO LN	S. JOHNS AVE	4	666	32	10/9/2014	5:MED-MED	9:HIGH-HIGH	0:NONE	3:LOW-HIGH	0:NONE	Overlay
431	E 12TH ST	END	GEMSTONE WAY	8	372	32	10/9/2014	0:NONE	3:LOW-HIGH	1:LOW-LOW	0:NONE	4:MED-LOW	Chip Seal
436	E 12TH ST	GEMSTONE WAY	SUBSTATION RD	6	924	32	10/9/2014	0:NONE	6:MED-HIGH	0:NONE	0:NONE	0:NONE	Chip Seal
545	E 12TH ST	ROYALTY AVE	REGENCY WAY	14	498	40	5/22/2014	0:NONE	0:NONE	0:NONE	1:LOW-LOW	0:NONE	No Maintenance
546	E 12TH ST	SANDHOLLOW RD	ROYALTY AVE	4	3236	21	5/22/2014	2:LOW-MED	9:HIGH-HIGH	0:NONE	5:MED-MED	0:NONE	Overlay
154	E 1ST ST	S HAYES AVE	S WASHINGTON AVE	8	362	32	10/9/2014	0:NONE	3:LOW-HIGH	0:NONE	0:NONE	0:NONE	Chip Seal
155	E 1ST ST	S. HAWTHORNE AVE	S MCKINLEY AVE	6	372	32	10/9/2014	5:MED-MED	6:MED-HIGH	4:MED-LOW	0:NONE	0:NONE	Chip Seal
157	E 1ST ST	S MCKINLEY AVE	S WARDWELL AVE	4	380	32	10/9/2014	6:MED-HIGH	6:MED-HIGH	4:MED-LOW	2:LOW-MED	0:NONE	Rebuild/Thick Overlay
159	E 1ST ST	S WARDWELL AVE	S HAYES AVE	6	378	32	10/9/2014	5:MED-MED	6:MED-HIGH	0:NONE	6:MED-HIGH	0:NONE	Chip Seal
161	E 1ST ST	S. JOHNS AVE	S. HAWTHORNE AVE	4	432	32	10/9/2014	6:MED-HIGH	6:MED-HIGH	0:NONE	0:NONE	5:MED-MED	Rebuild/Thick Overlay
166	E 1ST ST	S. DECLARK	S. JOHNS AVE	4	993	32	10/9/2014	6:MED-HIGH	9:HIGH-HIGH	0:NONE	9:HIGH-HIGH	6:MED-HIGH	Overlay
167	E 1ST ST	MOFFAT AVE	S. DECLARK	10	355	32	10/9/2014	1:LOW-LOW	2:LOW-MED	0:NONE	5:MED-MED	2:LOW-MED	Crack Seal
168	E 1ST ST	PINE AVE	BUTTE AVE	4	366	32	10/9/2014	5:MED-MED	8:HIGH-MED	0:NONE	6:MED-HIGH	9:HIGH-HIGH	Rebuild/Thick Overlay
169	E 1ST ST	BUTTE AVE	MOFFAT AVE	4	353	32	10/9/2014	1:LOW-LOW	3:LOW-HIGH	0:NONE	0:NONE	9:HIGH-HIGH	Rebuild/Thick Overlay
189	E 2ND ST	S WARDWELL AVE	S HAYES AVE	4	372	32	10/9/2014	2:LOW-MED	9:HIGH-HIGH	0:NONE	0:NONE	0:NONE	Overlay
190	E 2ND ST	S HAYES AVE	S WASHINGTON AVE	4	366	32	10/9/2014	5:MED-MED	9:HIGH-HIGH	0:NONE	0:NONE	2:LOW-MED	Overlay
194	E 2ND ST	S MCKINLEY AVE	S WARDWELL AVE	6	389	32	10/9/2014	3:LOW-HIGH	6:MED-HIGH	0:NONE	0:NONE	6:MED-HIGH	Patching
195	E 2ND ST	HAZEL AVE	S. JOHNS AVE	6	566	32	10/9/2014	2:LOW-MED	6:MED-HIGH	0:NONE	6:MED-HIGH	8:HIGH-MED	Overlay
197	E 2ND ST	S. DECLARK	HAZEL AVE	6	421	32	10/9/2014	3:LOW-HIGH	3:LOW-HIGH	0:NONE	5:MED-MED	3:LOW-HIGH	Chip Seal
198	E 2ND ST	S. HAWTHORNE AVE	S MCKINLEY AVE	4	367	32	10/9/2014	6:MED-HIGH	6:MED-HIGH	0:NONE	8:HIGH-MED	6:MED-HIGH	Rebuild/Thick Overlay
200	E 2ND ST	MOFFAT AVE	S. DECLARK	4	356	32	10/9/2014	6:MED-HIGH	3:LOW-HIGH	0:NONE	0:NONE	2:LOW-MED	Rebuild/Thick Overlay
201	E 2ND ST	S. JOHNS AVE	S. HAWTHORNE AVE	4	439	32	10/9/2014	6:MED-HIGH	9:HIGH-HIGH	0:NONE	0:NONE	0:NONE	Overlay
204	E 2ND ST	BUTTE AVE	MOFFAT AVE	6	359	32	10/9/2014	3:LOW-HIGH	2:LOW-MED	0:NONE	3:LOW-HIGH	0:NONE	Chip Seal
205	E 2ND ST	PINE AVE	BUTTE AVE	4	365	32	10/9/2014	3:LOW-HIGH	3:LOW-HIGH	0:NONE	3:LOW-HIGH	9:HIGH-HIGH	Rebuild/Thick Overlay
114	E MAIN ST	N HAYES AVE	N WASHINGTON AVE	20	364	32	9/1/2011	0:NONE	0:NONE	0:NONE	0:NONE	0:NONE	No Maintenance
117	E MAIN ST	S WARDWELL AVE	S HAYES AVE	8	377	32	10/9/2014	1:LOW-LOW	3:LOW-HIGH	1:LOW-LOW	0:NONE	0:NONE	Chip Seal
122	E MAIN ST	S MCKINLEY AVE	N WARDWELL AVE	8	378	32	10/9/2014	0:NONE	3:LOW-HIGH	0:NONE	0:NONE	1:LOW-LOW	Chip Seal
127	E MAIN ST	S. DECLARK	EVERGREEN DR	8	144	32	10/9/2014	1:LOW-LOW	3:LOW-HIGH	0:NONE	0:NONE	0:NONE	Chip Seal
129	E MAIN ST	MOFFAT AVE	N. DECLARK	8	347	32	10/9/2014	1:LOW-LOW	3:LOW-HIGH	0:NONE	0:NONE	1:LOW-LOW	Chip Seal
130	E MAIN ST	BUTTE AVE	MOFFAT AVE	8	368	32	10/9/2014	2:LOW-MED	3:LOW-HIGH	4:MED-LOW	0:NONE	0:NONE	Chip Seal
132	E MAIN ST	PINE AVE	BUTTE AVE	8	260	32	10/9/2014	0:NONE	3:LOW-HIGH	0:NONE	1:LOW-LOW	0:NONE	Chip Seal
133	E MAIN ST	PINE AVE	PINE AVE	8	103	32	10/9/2014	1:LOW-LOW	3:LOW-HIGH	0:NONE	4:MED-LOW	0:NONE	Chip Seal
134	E MAIN ST	N. JOHNS AVE	N MCKINLEY AVE	6	800	32	10/9/2014	0:NONE	6:MED-HIGH	0:NONE	0:NONE	2:LOW-MED	Chip Seal
135	E MAIN ST	EVERGREEN DR	S. JOHNS AVE	8	832	32	10/9/2014	1:LOW-LOW	3:LOW-HIGH	0:NONE	0:NONE	0:NONE	Chip Seal
137	E MAIN ST	ERICKSON AVE	RIGGS ST	8	134	32	10/9/2014	1:LOW-LOW	3:LOW-HIGH	1:LOW-LOW	0:NONE	0:NONE	Chip Seal
138	E MAIN ST	RIGGS ST	SUNNY LN	8	159	32	10/9/2014	1:LOW-LOW	3:LOW-HIGH	1:LOW-LOW	0:NONE	0:NONE	Chip Seal
139	E MAIN ST	END	ERICKSON AVE	8	368	32	10/9/2014	1:LOW-LOW	3:LOW-HIGH	1:LOW-LOW	0:NONE	0:NONE	Chip Seal
140	E MAIN ST	SUNNY LN	PINE AVE	8	764	32	10/9/2014	1:LOW-LOW	3:LOW-HIGH	0:NONE	4:MED-LOW	0:NONE	Chip Seal
526	E MAIN ST	CITY LIMIT	CITY LIMIT	20	1244	20	8/5/2014	0:NONE	0:NONE	0:NONE	0:NONE	0:NONE	No Maintenance
523	E MARSH CREEK RD	S BEAVER CREEK WAY	END	20	197	32	5/22/2014	0:NONE	0:NONE	0:NONE	0:NONE	0:NONE	No Maintenance
88	E PARK ST	MAPLE AVE	N. JOHNS AVE	6	401	32	10/9/2014	3:LOW-HIGH	6:MED-HIGH	0:NONE	0:NONE	5:MED-MED	Chip Seal
90	E PARK ST	MOFFAT AVE	PINE AVE	4	648	32	10/9/2014	3:LOW-HIGH	9:HIGH-HIGH	1:LOW-LOW	8:HIGH-MED	2:LOW-MED	Overlay
91	E PARK ST	END	MOFFAT AVE	12	154	32	10/9/2014	0:NONE	1:LOW-LOW	0:NONE	0:NONE	0:NONE	No Maintenance
94	E PARK ST	N. DECLARK	MAPLE AVE	6	593	32	10/9/2014	3:LOW-HIGH	2:LOW-MED	0:NONE	2:LOW-MED	3:LOW-HIGH	Chip Seal
95	E PARK ST	PINE AVE	RIGGS ST	8	1020	32	10/9/2014	2:LOW-MED	3:LOW-HIGH	0:NONE	3:LOW-HIGH	1:LOW-LOW	Chip Seal
96	E PARK ST	END	END	20	44	32	10/9/2014	0:NONE	0:NONE	0:NONE	0:NONE	0:NONE	No Maintenance

Segment ID	Road Name	From Address	To Address	Current RSL	Length (ft)	Width (ft)	Rating Date	Fatigue	Transverse	Longitudinal	Patching	Edge	Recommended Treatment
100	E PARK ST	N MCKINLEY AVE	N WARDWELL AVE	6	378	32	10/9/2014	3:LOW-HIGH	3:LOW-HIGH	4:MED-LOW	8:HIGH-MED	6:MED-HIGH	Patching
101	E PARK ST	N WARDWELL AVE	N HAYES AVE	4	374	32	10/9/2014	2:LOW-MED	8:HIGH-MED	0:NONE	0:NONE	9:HIGH-HIGH	Rebuild/Thick Overlay
102	E PARK ST	N HAYES AVE	N WASHINGTON AVE	10	367	32	10/9/2014	1:LOW-LOW	4:MED-LOW	0:NONE	7:HIGH-LOW	0:NONE	Patching
45	E. LOCUST ST	N. DECLARK	MAPLE AVE	0	598	32	10/9/2014	9:HIGH-HIGH	9:HIGH-HIGH	4:MED-LOW	9:HIGH-HIGH	5:MED-MED	Rebuild/Thick Overlay
46	E. LOCUST ST	BUTTE AVE	MOFFAT AVE	4	392	32	10/9/2014	6:MED-HIGH	6:MED-HIGH	0:NONE	8:HIGH-MED	6:MED-HIGH	Rebuild/Thick Overlay
47	E. LOCUST ST	MOFFAT AVE	N. DECLARK	4	347	32	10/9/2014	6:MED-HIGH	9:HIGH-HIGH	8:HIGH-MED	9:HIGH-HIGH	5:MED-MED	Overlay
48	E. LOCUST ST	PINE AVE	BUTTE AVE	4	247	32	10/9/2014	6:MED-HIGH	6:MED-HIGH	4:MED-LOW	2:LOW-MED	6:MED-HIGH	Rebuild/Thick Overlay
50	E. LOCUST ST	RIGGS ST	RIGGS ST	4	142	32	10/9/2014	6:MED-HIGH	9:HIGH-HIGH	4:MED-LOW	7:HIGH-LOW	9:HIGH-HIGH	Rebuild/Thick Overlay
51	E. LOCUST ST	RIGGS ST	PINE AVE	4	852	32	10/9/2014	3:LOW-HIGH	9:HIGH-HIGH	1:LOW-LOW	8:HIGH-MED	9:HIGH-HIGH	Rebuild/Thick Overlay
52	E. LOCUST ST	END	RIGGS ST	6	651	32	10/9/2014	3:LOW-HIGH	4:MED-LOW	0:NONE	7:HIGH-LOW	6:MED-HIGH	Patching
53	E. LOCUST ST	MAPLE AVE	N. JOHNS AVE	2	461	32	10/9/2014	8:HIGH-MED	9:HIGH-HIGH	9:HIGH-HIGH	5:MED-MED	8:HIGH-MED	Rebuild/Thick Overlay
428	EAST 12TH ST	END	E 12TH ST	10	1306	32	10/9/2014	0:NONE	2:LOW-MED	1:LOW-LOW	0:NONE	0:NONE	Crack Seal
434	EAST 12TH ST	REGENCY WAY	CRYSTAL CR DR	8	550	32	10/9/2014	0:NONE	5:MED-MED	0:NONE	1:LOW-LOW	0:NONE	Chip Seal
437	EAST 12TH ST	CRYSTAL CR DR	SUBSTATION RD	6	923	32	10/9/2014	0:NONE	6:MED-HIGH	1:LOW-LOW	0:NONE	4:MED-LOW	Chip Seal
600	ENTERPRISE ST	S WASHINGTON AVE	SERVICE AVE	4	0	32	5/22/2014	7:HIGH-LOW	9:HIGH-HIGH	7:HIGH-LOW	0:NONE	0:NONE	Overlay
174	ERICKSON AVE	E MAIN ST	END	6	717	32	10/9/2014	3:LOW-HIGH	6:MED-HIGH	1:LOW-LOW	5:MED-MED	5:MED-MED	Chip Seal
123	EVERGREEN DR	E MAIN ST	E MAIN ST	6	504	32	10/9/2014	1:LOW-LOW	3:LOW-HIGH	0:NONE	0:NONE	8:HIGH-MED	Overlay
380	FELTAM PEAK DR	VANITY PEAK DR	SUBSTATION RD	12	475	32	10/9/2014	0:NONE	1:LOW-LOW	0:NONE	4:MED-LOW	0:NONE	No Maintenance
404	FELTAM PEAK DR	PINYON PEAK ST	VANITY PEAK DR	12	1375	32	10/9/2014	0:NONE	1:LOW-LOW	0:NONE	0:NONE	0:NONE	No Maintenance
521	FELTHAM PEAK DR	SUBSTATION RD	PROSPECT WAY	14	332	32	5/22/2014	0:NONE	0:NONE	1:LOW-LOW	0:NONE	0:NONE	No Maintenance
4	FERNLEE CIR	FERNLEE ST	END	4	304	32	10/9/2014	6:MED-HIGH	5:MED-MED	4:MED-LOW	1:LOW-LOW	4:MED-LOW	Rebuild/Thick Overlay
3	FERNLEE ST	FERNLEE CIR	END	4	298	32	10/9/2014	6:MED-HIGH	6:MED-HIGH	4:MED-LOW	0:NONE	4:MED-LOW	Rebuild/Thick Overlay
20	FERNLEE ST	BUTTE AVE	MOFFAT AVE	6	389	32	10/9/2014	3:LOW-HIGH	5:MED-MED	4:MED-LOW	1:LOW-LOW	6:MED-HIGH	Patching
447	FREEDOM LN	REPUBLIC LN	CONSTITUTION LN	10	560	32	10/9/2014	1:LOW-LOW	0:NONE	0:NONE	0:NONE	0:NONE	No Maintenance
449	FREEDOM LN	CONSTITUTION LN	AMERICAN AVE	8	538	32	10/9/2014	0:NONE	5:MED-MED	0:NONE	0:NONE	7:HIGH-LOW	Patching
323	GALA TR	ALBERTA AVE	QUEEN ANN DR	8	869	32	10/9/2014	0:NONE	7:HIGH-LOW	0:NONE	0:NONE	4:MED-LOW	Patching
352	GALA TR	SUBD	ALBERTA AVE	8	990	32	10/9/2014	0:NONE	3:LOW-HIGH	0:NONE	5:MED-MED	0:NONE	Chip Seal
373	GEMSTONE WAY	STONE DR	END	12	349	32	10/9/2014	0:NONE	1:LOW-LOW	0:NONE	0:NONE	0:NONE	No Maintenance
381	GEMSTONE WAY	10 ST	STONE DR	10	225	32	10/9/2014	1:LOW-LOW	0:NONE	0:NONE	0:NONE	0:NONE	No Maintenance
397	GEMSTONE WAY	END	10 ST	8	462	32	10/9/2014	2:LOW-MED	4:MED-LOW	0:NONE	4:MED-LOW	0:NONE	Chip Seal
400	GEMSTONE WAY	END	END	10	204	32	10/9/2014	0:NONE	4:MED-LOW	0:NONE	0:NONE	0:NONE	Crack Seal
430	GEMSTONE WAY	E 12TH ST	END	10	422	32	10/9/2014	0:NONE	4:MED-LOW	0:NONE	0:NONE	0:NONE	Crack Seal
206	HAZEL AVE	3RD ST	E 2ND ST	12	332	32	10/9/2014	0:NONE	1:LOW-LOW	0:NONE	0:NONE	0:NONE	No Maintenance
262	HAZEL AVE	4TH ST	3RD ST	6	319	32	10/9/2014	0:NONE	8:HIGH-MED	0:NONE	7:HIGH-LOW	3:LOW-HIGH	Overlay
294	HAZEL AVE	5TH ST	4TH ST	4	383	32	10/9/2014	2:LOW-MED	6:MED-HIGH	0:NONE	7:HIGH-LOW	9:HIGH-HIGH	Rebuild/Thick Overlay
313	HAZEL AVE	S. DECLARK	5TH ST	4	556	32	10/9/2014	3:LOW-HIGH	2:LOW-MED	0:NONE	5:MED-MED	9:HIGH-HIGH	Rebuild/Thick Overlay
504	HOMESTEAD DR	S MILL RD	KAETZEL WAY	20	155	32	5/22/2014	0:NONE	0:NONE	0:NONE	0:NONE	0:NONE	No Maintenance
505	HOMESTEAD DR	KAETZEL WAY	DITTMAN DR	14	1124	32	5/22/2014	0:NONE	0:NONE	0:NONE	1:LOW-LOW	0:NONE	No Maintenance
506	HOMESTEAD DR	DITTMAN DR	END	20	172	0	5/22/2014	0:NONE	0:NONE	0:NONE	0:NONE	0:NONE	No Maintenance
466	HWY 16	S WASHINGTON AVE	JUDD LN	6	1247	32	10/9/2014	3:LOW-HIGH	6:MED-HIGH	0:NONE	8:HIGH-MED	5:MED-MED	Chip Seal
468	HWY 16	JUDD LN	S. JOHNS AVE	0	670	32	0	0	0	0	0	0	0
470	HWY 16	S. JOHNS AVE	END	0	5228	32	0	0	0	0	0	0	0
462	HWY 52	END	S BOISE AVE	0	2559	32	0	0	0	0	0	0	0
464	HWY 52	S BOISE AVE	S WASHINGTON AVE	0	719	32	0	0	0	0	0	0	0
1	HWY 52 ..16	OXLEY RD	END	0	66	32	0	0	0	0	0	0	0
439	INDEPENDENCE LN	CONSTITUTION LN	CONSTITUTION LN	10	89	32	10/9/2014	0:NONE	2:LOW-MED	0:NONE	4:MED-LOW	0:NONE	Crack Seal
441	INDEPENDENCE LN	CONSTITUTION LN	AMERICAN AVE	10	557	32	10/9/2014	0:NONE	2:LOW-MED	0:NONE	4:MED-LOW	0:NONE	Crack Seal
443	INDEPENDENCE LN	REPUBLIC LN	CONSTITUTION LN	10	467	32	10/9/2014	0:NONE	2:LOW-MED	0:NONE	0:NONE	0:NONE	Crack Seal
444	INDEPENDENCE LN	S. JOHNS AVE	REPUBLIC LN	10	119	32	10/9/2014	0:NONE	4:MED-LOW	0:NONE	0:NONE	0:NONE	Crack Seal
325	JADE PL	WILLIAMS RD	END	6	436	32	10/9/2014	0:NONE	6:MED-HIGH	0:NONE	0:NONE	0:NONE	Chip Seal
408	JOHNSON AVE	W 12TH ST	END	4	564	32	10/9/2014	6:MED-HIGH	0:NONE	0:NONE	6:MED-HIGH	3:LOW-HIGH	Rebuild/Thick Overlay
465	JUDD LN	E 12TH ST	HWY 16	6	1235	32	10/9/2014	2:LOW-MED	6:MED-HIGH	0:NONE	8:HIGH-MED	8:HIGH-MED	Overlay
509	KAETZEL WAY	HOMESTEAD DR	DITTMAN DR	14	735	32	5/22/2014	0:NONE	0:NONE	0:NONE	1:LOW-LOW	0:NONE	No Maintenance
451	LIBERTY LN	CONSTITUTION LN	REPUBLIC LN	8	528	32	10/9/2014	2:LOW-MED	1:LOW-LOW	0:NONE	1:LOW-LOW	0:NONE	Chip Seal
454	LIBERTY LN	AMERICAN AVE	CONSTITUTION LN	10	540	32	10/9/2014	0:NONE	2:LOW-MED	0:NONE	0:NONE	0:NONE	Crack Seal
455	LIBERTY LN	REPUBLIC LN	S. JOHNS AVE	8	171	32	10/9/2014	2:LOW-MED	3:LOW-HIGH	0:NONE	0:NONE	0:NONE	Chip Seal

Segment ID	Road Name	From Address	To Address	Current RSL	Length (ft)	Width (ft)	Rating Date	Fatigue	Transverse	Longitudinal	Patching	Edge	Recommended Treatment
457	LIBERTY LN	S. JOHNS AVE	END	8	138	32	10/9/2014	2:LOW-MED	3:LOW-HIGH	0:NONE	0:NONE	0:NONE	Chip Seal
146	LINCOLN AVE	W 1ST ST	W MAIN ST	10	371	20	10/9/2014	0:NONE	0:NONE	0:NONE	5:MED-MED	0:NONE	Chip Seal
176	LINCOLN AVE	W 2ND ST	W 1ST ST	8	360	32	10/9/2014	2:LOW-MED	0:NONE	0:NONE	0:NONE	0:NONE	Chip Seal
218	LINCOLN AVE	3RD ST	W 2ND ST	14	371	32	10/9/2014	0:NONE	0:NONE	1:LOW-LOW	0:NONE	0:NONE	No Maintenance
245	LINCOLN AVE	4TH ST	3RD ST	10	243	32	10/9/2014	1:LOW-LOW	0:NONE	1:LOW-LOW	0:NONE	0:NONE	No Maintenance
280	LINCOLN AVE	5TH ST	4TH ST	6	354	32	10/9/2014	3:LOW-HIGH	4:MED-LOW	0:NONE	0:NONE	3:LOW-HIGH	Chip Seal
300	LINCOLN AVE	W 6TH ST	5TH ST	6	310	32	10/9/2014	3:LOW-HIGH	0:NONE	0:NONE	4:MED-LOW	3:LOW-HIGH	Chip Seal
412	LINCOLN AVE	W 12TH ST	W 6TH ST	4	1979	20	10/9/2014	6:MED-HIGH	0:NONE	0:NONE	6:MED-HIGH	3:LOW-HIGH	Rebuild/Thick Overlay
17	LORAINE CIR	BUTTE SHADOW ST	END	2	324	32	10/9/2014	8:HIGH-MED	7:HIGH-LOW	0:NONE	7:HIGH-LOW	9:HIGH-HIGH	Rebuild/Thick Overlay
368	LYNN DR	S. JOHNS AVE	7TH ST	6	533	32	10/9/2014	5:MED-MED	3:LOW-HIGH	0:NONE	6:MED-HIGH	5:MED-MED	Overlay
86	MAPLE AVE	E. LOCUST ST	E PARK ST	10	659	32	10/9/2014	1:LOW-LOW	1:LOW-LOW	0:NONE	0:NONE	0:NONE	No Maintenance
533	MARIPOSA CT	DUCHESS TR	END	8	472	30	5/22/2014	0:NONE	7:HIGH-LOW	1:LOW-LOW	1:LOW-LOW	0:NONE	Patching
175	MCAULIFFE AVE	W 2ND ST	W MAIN ST	6	292	32	10/9/2014	2:LOW-MED	7:HIGH-LOW	0:NONE	0:NONE	8:HIGH-MED	Overlay
238	MCAULIFFE AVE	4TH ST	W 2ND ST	6	601	32	10/9/2014	2:LOW-MED	0:NONE	0:NONE	4:MED-LOW	6:MED-HIGH	Patching
302	MEADOW DR	4TH ST	END	4	706	32	10/9/2014	5:MED-MED	2:LOW-MED	0:NONE	9:HIGH-HIGH	9:HIGH-HIGH	Rebuild/Thick Overlay
328	MIMOSA LN	QUEEN ANN DR	QUEEN ANN DR	8	894	32	10/9/2014	1:LOW-LOW	5:MED-MED	0:NONE	1:LOW-LOW	1:LOW-LOW	Chip Seal
335	MIMOSA LN	SUBD	QUEEN ANN DR	6	361	32	10/9/2014	0:NONE	6:MED-HIGH	0:NONE	0:NONE	0:NONE	Chip Seal
44	MOFFAT AVE	FERNLEE ST	E. LOCUST ST	8	614	32	10/9/2014	1:LOW-LOW	3:LOW-HIGH	0:NONE	4:MED-LOW	0:NONE	Chip Seal
103	MOFFAT AVE	PHILLIPS ST	E PARK ST	6	299	32	10/9/2014	3:LOW-HIGH	4:MED-LOW	0:NONE	0:NONE	6:MED-HIGH	Patching
128	MOFFAT AVE	E MAIN ST	PHILLIPS ST	10	296	32	10/9/2014	1:LOW-LOW	0:NONE	0:NONE	0:NONE	2:LOW-MED	Crack Seal
165	MOFFAT AVE	E 1ST ST	E MAIN ST	6	371	32	10/9/2014	3:LOW-HIGH	1:LOW-LOW	0:NONE	0:NONE	8:HIGH-MED	Overlay
199	MOFFAT AVE	E 2ND ST	E 1ST ST	4	360	32	10/9/2014	6:MED-HIGH	0:NONE	0:NONE	0:NONE	6:MED-HIGH	Rebuild/Thick Overlay
212	MOFFAT AVE	3RD ST	E 2ND ST	0	335	32	10/9/2014	9:HIGH-HIGH	6:MED-HIGH	0:NONE	6:MED-HIGH	9:HIGH-HIGH	Rebuild/Thick Overlay
266	MOFFAT AVE	4TH ST	3RD ST	8	319	32	10/9/2014	0:NONE	3:LOW-HIGH	0:NONE	7:HIGH-LOW	5:MED-MED	Patching
422	MOFFAT AVE	EAST 12TH ST	7TH ST	6	1493	32	10/9/2014	3:LOW-HIGH	7:HIGH-LOW	0:NONE	0:NONE	8:HIGH-MED	Overlay
534	MONARCH ST	REGENCY WAY	PALACE AVE	12	289	33	8/5/2014	0:NONE	0:NONE	0:NONE	4:MED-LOW	0:NONE	No Maintenance
535	MONARCH ST	PALACE AVE	ROYALTY AVE	10	239	33	5/22/2014	1:LOW-LOW	0:NONE	0:NONE	0:NONE	0:NONE	No Maintenance
35	MONROE ST	RIVERSIDE ST	WALNUT ST	6	795	32	10/9/2014	3:LOW-HIGH	3:LOW-HIGH	0:NONE	1:LOW-LOW	2:LOW-MED	Chip Seal
320	MONTE VISTA DR	4TH ST	SHASTA DR	8	780	32	10/9/2014	2:LOW-MED	3:LOW-HIGH	0:NONE	8:HIGH-MED	5:MED-MED	Patching
353	MONTE VISTA DR	SHASTA DR	CASCDE ST	6	401	32	10/9/2014	3:LOW-HIGH	0:NONE	0:NONE	5:MED-MED	8:HIGH-MED	Overlay
145	MURRAY AVE	W 1ST ST	W MAIN ST	8	357	32	10/9/2014	2:LOW-MED	0:NONE	4:MED-LOW	3:LOW-HIGH	0:NONE	Chip Seal
177	MURRAY AVE	W 2ND ST	W 1ST ST	8	361	32	10/9/2014	2:LOW-MED	2:LOW-MED	0:NONE	0:NONE	5:MED-MED	Patching
217	MURRAY AVE	3RD ST	W 2ND ST	10	371	32	10/9/2014	1:LOW-LOW	0:NONE	1:LOW-LOW	0:NONE	0:NONE	No Maintenance
243	MURRAY AVE	4TH ST	3RD ST	12	238	32	10/9/2014	0:NONE	0:NONE	4:MED-LOW	1:LOW-LOW	0:NONE	Crack Seal
278	MURRAY AVE	5TH ST	4TH ST	4	351	32	10/9/2014	6:MED-HIGH	0:NONE	0:NONE	0:NONE	3:LOW-HIGH	Rebuild/Thick Overlay
38	MUSSER ST	END	N BOISE AVE	12	177	32	10/9/2014	0:NONE	0:NONE	0:NONE	0:NONE	1:LOW-LOW	Crack Seal
40	MUSSER ST	N BOISE AVE	N COMMERCIAL AVE	10	356	32	10/9/2014	0:NONE	0:NONE	0:NONE	7:HIGH-LOW	0:NONE	Patching
41	MUSSER ST	N COMMERCIAL AVE	N WASHINGTON AVE	8	360	32	10/9/2014	0:NONE	7:HIGH-LOW	0:NONE	3:LOW-HIGH	0:NONE	Patching
42	MUSSER ST	N WASHINGTON AVE	N HAYES AVE	4	354	32	10/9/2014	6:MED-HIGH	0:NONE	0:NONE	9:HIGH-HIGH	0:NONE	Rebuild/Thick Overlay
7	N BOISE AVE	END	OXLEY RD	10	117	32	10/9/2014	0:NONE	0:NONE	0:NONE	4:MED-LOW	2:LOW-MED	Crack Seal
8	N BOISE AVE	OXLEY RD	CARSON ST	20	127	32	10/9/2014	0:NONE	0:NONE	0:NONE	0:NONE	0:NONE	No Maintenance
25	N BOISE AVE	CARSON ST	BARTON ST	12	361	32	10/9/2014	0:NONE	1:LOW-LOW	0:NONE	0:NONE	0:NONE	No Maintenance
37	N BOISE AVE	BARTON ST	MUSSER ST	12	361	32	10/9/2014	0:NONE	1:LOW-LOW	0:NONE	4:MED-LOW	0:NONE	No Maintenance
59	N BOISE AVE	MUSSER ST	DION ST	10	339	32	10/9/2014	1:LOW-LOW	1:LOW-LOW	0:NONE	0:NONE	0:NONE	No Maintenance
84	N BOISE AVE	DION ST	CANAL ST	12	347	32	10/9/2014	0:NONE	1:LOW-LOW	0:NONE	4:MED-LOW	0:NONE	No Maintenance
9	N COMMERCIAL AVE	CARSON ST	OXLEY RD	10	258	32	10/9/2014	0:NONE	0:NONE	0:NONE	0:NONE	2:LOW-MED	Crack Seal
23	N COMMERCIAL AVE	BARTON ST	CARSON ST	8	360	32	10/9/2014	2:LOW-MED	0:NONE	1:LOW-LOW	0:NONE	0:NONE	Chip Seal
36	N COMMERCIAL AVE	MUSSER ST	BARTON ST	12	359	32	10/9/2014	0:NONE	1:LOW-LOW	0:NONE	0:NONE	0:NONE	No Maintenance
58	N COMMERCIAL AVE	DION ST	MUSSER ST	12	337	32	10/9/2014	0:NONE	0:NONE	0:NONE	2:LOW-MED	0:NONE	No Maintenance
83	N COMMERCIAL AVE	CANAL ST	DION ST	10	343	32	10/9/2014	0:NONE	0:NONE	0:NONE	0:NONE	4:MED-LOW	Patching
109	N COMMERCIAL AVE	W MAIN ST	W PARK ST	4	228	32	10/9/2014	6:MED-HIGH	3:LOW-HIGH	0:NONE	7:HIGH-LOW	0:NONE	Rebuild/Thick Overlay
530	N FUJI AVE	QUEEN ANN AVE	N END	12	130	30	5/22/2014	0:NONE	0:NONE	0:NONE	0:NONE	1:LOW-LOW	Crack Seal
13	N HAYES AVE	END	RIVERSIDE ST	4	104	32	10/9/2014	0:NONE	0:NONE	0:NONE	0:NONE	9:HIGH-HIGH	Rebuild/Thick Overlay
64	N HAYES AVE	MUSSER ST	CANAL ST	4	337	32	10/9/2014	6:MED-HIGH	0:NONE	0:NONE	9:HIGH-HIGH	0:NONE	Rebuild/Thick Overlay
113	N HAYES AVE	E MAIN ST	E PARK ST	4	341	32	10/9/2014	3:LOW-HIGH	9:HIGH-HIGH	0:NONE	1:LOW-LOW	2:LOW-MED	Overlay
99	N MCKINLEY AVE	DEWEY ST	E PARK ST	12	315	32	10/9/2014	0:NONE	0:NONE	4:MED-LOW	0:NONE	0:NONE	Crack Seal

Segment ID	Road Name	From Address	To Address	Current RSL	Length (ft)	Width (ft)	Rating Date	Fatigue	Transverse	Longitudinal	Patching	Edge	Recommended Treatment
121	N MCKINLEY AVE	E PARK ST	E MAIN ST	8	368	32	10/9/2014	2:LOW-MED	3:LOW-HIGH	0:NONE	5:MED-MED	0:NONE	Chip Seal
21	N WARDWELL AVE	RIVERSIDE ST	RIVERSIDE ST	10	130	32	9/1/2011	1:LOW-LOW	4:MED-LOW	0:NONE	1:LOW-LOW	4:MED-LOW	No Maintenance
57	N WARDWELL AVE	RIVERSIDE ST	WALNUT ST	4	855	32	10/9/2014	6:MED-HIGH	0:NONE	0:NONE	4:MED-LOW	6:MED-HIGH	Rebuild/Thick Overlay
98	N WARDWELL AVE	DION ST	E PARK ST	6	627	32	10/9/2014	3:LOW-HIGH	0:NONE	1:LOW-LOW	9:HIGH-HIGH	5:MED-MED	Overlay
116	N WARDWELL AVE	E PARK ST	E MAIN ST	4	361	32	10/9/2014	6:MED-HIGH	6:MED-HIGH	0:NONE	0:NONE	3:LOW-HIGH	Rebuild/Thick Overlay
11	N WASHINGTON AVE	END	CARSON ST	0	293	32	0	0	0	0	0	0	0
24	N WASHINGTON AVE	RIVERSIDE ST	BARTON ST	0	353	32	0	0	0	0	0	0	0
39	N WASHINGTON AVE	BARTON ST	MUSSER ST	0	361	32	0	0	0	0	0	0	0
61	N WASHINGTON AVE	MUSSER ST	DION ST	0	341	32	0	0	0	0	0	0	0
78	N WASHINGTON AVE	DION ST	CANAL ST	0	239	32	0	0	0	0	0	0	0
97	N WASHINGTON AVE	CANAL ST	E PARK ST	0	343	32	0	0	0	0	0	0	0
111	N WASHINGTON AVE	W PARK ST	E MAIN ST	0	361	32	0	0	0	0	0	0	0
70	N. DECLARK	E. LOCUST ST	TERRY DR	8	327	32	10/9/2014	2:LOW-MED	2:LOW-MED	0:NONE	7:HIGH-LOW	2:LOW-MED	Chip Seal
93	N. DECLARK	TERRY DR	E PARK ST	10	341	32	10/9/2014	1:LOW-LOW	2:LOW-MED	0:NONE	3:LOW-HIGH	0:NONE	Chip Seal
126	N. DECLARK	E PARK ST	E MAIN ST	6	579	32	10/9/2014	3:LOW-HIGH	6:MED-HIGH	4:MED-LOW	7:HIGH-LOW	2:LOW-MED	Chip Seal
54	N. JOHNS AVE	E. LOCUST ST	RIVERSIDE ST	0	542	32	10/9/2014	9:HIGH-HIGH	9:HIGH-HIGH	0:NONE	9:HIGH-HIGH	0:NONE	Rebuild/Thick Overlay
69	N. JOHNS AVE	DEWEY ST	E. LOCUST ST	6	188	32	10/9/2014	3:LOW-HIGH	6:MED-HIGH	0:NONE	0:NONE	0:NONE	Chip Seal
87	N. JOHNS AVE	E PARK ST	DEWEY ST	6	339	32	10/9/2014	3:LOW-HIGH	2:LOW-MED	0:NONE	0:NONE	6:MED-HIGH	Patching
125	N. JOHNS AVE	E MAIN ST	E PARK ST	8	594	32	10/9/2014	2:LOW-MED	3:LOW-HIGH	0:NONE	4:MED-LOW	2:LOW-MED	Chip Seal
342	OLD GLORY	7TH ST	END	20	443	32	10/9/2014	0:NONE	0:NONE	0:NONE	0:NONE	0:NONE	No Maintenance
68	OLD MAPLE DR	RIGGS ST	RIGGS ST	10	547	32	10/9/2014	1:LOW-LOW	0:NONE	0:NONE	1:LOW-LOW	0:NONE	No Maintenance
2	OXLEY RD	HWY 52 ..16	END	6	169	32	9/11/2014	3:LOW-HIGH	3:LOW-HIGH	1:LOW-LOW	0:NONE	0:NONE	Chip Seal
6	OXLEY RD	N BOISE AVE	N COMMERCIAL AVE	20	410	32	9/1/2011	0:NONE	0:NONE	0:NONE	0:NONE	0:NONE	No Maintenance
544	PALACE AVE	MONARCH ST	PRINCESS ST	10	944	33	5/22/2014	0:NONE	4:MED-LOW	0:NONE	1:LOW-LOW	0:NONE	Crack Seal
371	PEACH ST	S. JOHNS AVE	S. HAWTHORNE AVE	6	517	32	10/9/2014	3:LOW-HIGH	1:LOW-LOW	0:NONE	5:MED-MED	2:LOW-MED	Chip Seal
105	PHILLIPS ST	PINE AVE	MOFFAT AVE	6	647	32	10/9/2014	3:LOW-HIGH	3:LOW-HIGH	0:NONE	6:MED-HIGH	3:LOW-HIGH	Chip Seal
107	PHILLIPS ST	RIGGS ST	PINE AVE	4	1016	32	9/1/2011	6:MED-HIGH	0:NONE	0:NONE	7:HIGH-LOW	8:HIGH-MED	Rebuild/Thick Overlay
71	PINE AVE	E. LOCUST ST	BLAINE ST	6	331	32	10/9/2014	3:LOW-HIGH	5:MED-MED	0:NONE	8:HIGH-MED	3:LOW-HIGH	Chip Seal
89	PINE AVE	BLAINE ST	E PARK ST	6	323	32	10/9/2014	3:LOW-HIGH	3:LOW-HIGH	0:NONE	0:NONE	3:LOW-HIGH	Chip Seal
104	PINE AVE	E PARK ST	PHILLIPS ST	4	297	32	10/9/2014	6:MED-HIGH	9:HIGH-HIGH	0:NONE	1:LOW-LOW	0:NONE	Overlay
131	PINE AVE	PHILLIPS ST	E MAIN ST	6	297	32	10/9/2014	0:NONE	6:MED-HIGH	1:LOW-LOW	0:NONE	3:LOW-HIGH	Chip Seal
164	PINE AVE	E MAIN ST	E 1ST ST	4	364	32	10/9/2014	6:MED-HIGH	6:MED-HIGH	1:LOW-LOW	0:NONE	2:LOW-MED	Rebuild/Thick Overlay
171	PINE AVE	E 1ST ST	VISTA DR	4	180	32	10/9/2014	0:NONE	6:MED-HIGH	0:NONE	4:MED-LOW	9:HIGH-HIGH	Rebuild/Thick Overlay
203	PINE AVE	VISTA DR	E 2ND ST	4	186	32	10/9/2014	6:MED-HIGH	0:NONE	0:NONE	0:NONE	0:NONE	Rebuild/Thick Overlay
215	PINE AVE	E 2ND ST	3RD ST	4	340	32	10/9/2014	6:MED-HIGH	0:NONE	0:NONE	0:NONE	8:HIGH-MED	Rebuild/Thick Overlay
272	PINE AVE	3RD ST	4TH ST	6	314	32	10/9/2014	3:LOW-HIGH	0:NONE	2:LOW-MED	5:MED-MED	3:LOW-HIGH	Chip Seal
403	PINYON PEAK ST	VANITY PEAK DR	CRYSTAL CR DR	8	446	32	10/9/2014	0:NONE	3:LOW-HIGH	0:NONE	0:NONE	0:NONE	Chip Seal
405	PINYON PEAK ST	CRYSTAL CR DR	FELTAM PEAK DR	8	276	32	10/9/2014	0:NONE	7:HIGH-LOW	0:NONE	4:MED-LOW	0:NONE	Patching
538	PRINCESS ST	ROYALTY AVE	PALACE AVE	14	256	33	5/22/2014	0:NONE	0:NONE	0:NONE	1:LOW-LOW	0:NONE	No Maintenance
539	PRINCESS ST	PALACE AVE	REGENCY WAY	10	248	33	5/22/2014	0:NONE	2:LOW-MED	0:NONE	1:LOW-LOW	0:NONE	Crack Seal
524	PROSPECT WAY	E MARSH CREEK RD	FELTHAM PEAK RD	20	442	32	5/22/2014	0:NONE	0:NONE	0:NONE	0:NONE	0:NONE	No Maintenance
366	QUAIL RUN RD	SUBSTATION RD	ALBERTA AVE	6	1232	32	10/9/2014	0:NONE	6:MED-HIGH	0:NONE	5:MED-MED	0:NONE	Chip Seal
367	QUAIL RUN RD	ALBERTA AVE	REGENCY WAY	12	196	32	10/9/2014	0:NONE	1:LOW-LOW	1:LOW-LOW	1:LOW-LOW	0:NONE	No Maintenance
543	QUAIL RUN RD	CITY LIMIT	REGENCY WAY	12	713	30	5/22/2014	0:NONE	1:LOW-LOW	0:NONE	1:LOW-LOW	1:LOW-LOW	Crack Seal
528	QUEEN ANN AVE	S FUJI	DUCHESS TR	12	1057	30	5/22/2014	0:NONE	0:NONE	0:NONE	0:NONE	1:LOW-LOW	Crack Seal
276	QUEEN ANN DR	GALA TR	DUCHESS ST	8	381	32	10/9/2014	0:NONE	7:HIGH-LOW	1:LOW-LOW	0:NONE	0:NONE	Patching
299	QUEEN ANN DR	GALA TR	MIMOSA LN	8	431	32	10/9/2014	0:NONE	7:HIGH-LOW	0:NONE	0:NONE	1:LOW-LOW	Patching
327	QUEEN ANN DR	MIMOSA LN	MIMOSA LN	8	688	32	10/9/2014	0:NONE	3:LOW-HIGH	0:NONE	0:NONE	0:NONE	Chip Seal
336	QUEEN ANN DR	SUBSTATION RD	MIMOSA LN	20	201	32	10/9/2014	0:NONE	0:NONE	0:NONE	0:NONE	0:NONE	No Maintenance
339	QUEEN ANN DR	SUBSTATION RD	GALA TR	20	206	32	10/9/2014	0:NONE	0:NONE	0:NONE	0:NONE	0:NONE	No Maintenance
351	QUEEN ANN DR	SUBSTATION RD	GALA TR	8	115	32	10/9/2014	4:MED-LOW	3:LOW-HIGH	1:LOW-LOW	0:NONE	0:NONE	Chip Seal
332	RAINIER DR	SHASTA DR	ROCKY ST	6	208	32	10/9/2014	3:LOW-HIGH	0:NONE	0:NONE	5:MED-MED	3:LOW-HIGH	Chip Seal
356	RAINIER DR	ROCKY ST	CASCDE ST	6	211	32	10/9/2014	3:LOW-HIGH	0:NONE	0:NONE	5:MED-MED	3:LOW-HIGH	Chip Seal
540	REGENCY WAY	E 12TH ST	PRINCESS ST	12	183	33	5/22/2014	0:NONE	1:LOW-LOW	0:NONE	1:LOW-LOW	0:NONE	No Maintenance
541	REGENCY WAY	PRINCESS ST	MONARCH ST	10	945	33	5/22/2014	0:NONE	4:MED-LOW	0:NONE	0:NONE	0:NONE	Crack Seal
542	REGENCY WAY	MONARCH ST	E QUAIL RUN RD	14	189	33	5/22/2014	0:NONE	0:NONE	0:NONE	1:LOW-LOW	0:NONE	No Maintenance

Segment ID	Road Name	From Address	To Address	Current RSL	Length (ft)	Width (ft)	Rating Date	Fatigue	Transverse	Longitudinal	Patching	Edge	Recommended Treatment
445	REPUBLIC LN	FREEDOM LN	INDEPENDENCE LN	10	187	32	10/9/2014	0:NONE	4:MED-LOW	0:NONE	0:NONE	0:NONE	Crack Seal
452	REPUBLIC LN	LIBERTY LN	FREEDOM LN	10	237	32	10/9/2014	0:NONE	4:MED-LOW	0:NONE	0:NONE	0:NONE	Crack Seal
16	RIGGS ST	BUTTE SHADOW ST	FERNLEE CIR	2	332	32	10/9/2014	8:HIGH-MED	6:MED-HIGH	0:NONE	6:MED-HIGH	2:LOW-MED	Rebuild/Thick Overlay
31	RIGGS ST	SHADOW RIDGE CIR	BUTTE SHADOW ST	4	330	32	10/9/2014	6:MED-HIGH	6:MED-HIGH	0:NONE	6:MED-HIGH	2:LOW-MED	Rebuild/Thick Overlay
49	RIGGS ST	E. LOCUST ST	SHADOW RIDGE CIR	6	325	32	10/9/2014	3:LOW-HIGH	1:LOW-LOW	1:LOW-LOW	3:LOW-HIGH	2:LOW-MED	Chip Seal
55	RIGGS ST	E. LOCUST ST	RIGGS LOOP	10	189	32	10/9/2014	0:NONE	2:LOW-MED	1:LOW-LOW	0:NONE	0:NONE	Crack Seal
67	RIGGS ST	RIGGS LOOP	RIGGS LOOP	12	106	32	10/9/2014	0:NONE	0:NONE	0:NONE	1:LOW-LOW	1:LOW-LOW	Crack Seal
74	RIGGS ST	RIGGS LOOP	BLAINE ST	12	112	32	10/9/2014	0:NONE	0:NONE	0:NONE	1:LOW-LOW	1:LOW-LOW	Crack Seal
79	RIGGS ST	BLAINE ST	BASQUE LN	6	115	32	10/9/2014	3:LOW-HIGH	0:NONE	0:NONE	8:HIGH-MED	3:LOW-HIGH	Chip Seal
92	RIGGS ST	BASQUE LN	E PARK ST	6	134	32	10/9/2014	3:LOW-HIGH	0:NONE	0:NONE	8:HIGH-MED	3:LOW-HIGH	Chip Seal
106	RIGGS ST	E PARK ST	PHILLIPS ST	6	295	32	10/9/2014	3:LOW-HIGH	0:NONE	0:NONE	3:LOW-HIGH	4:MED-LOW	Chip Seal
136	RIGGS ST	PHILLIPS ST	E MAIN ST	8	299	32	10/9/2014	1:LOW-LOW	2:LOW-MED	0:NONE	0:NONE	7:HIGH-LOW	Patching
14	RIVERSIDE ST	N WASHINGTON AVE	N HAYES AVE	2	384	34	10/9/2014	8:HIGH-MED	8:HIGH-MED	0:NONE	4:MED-LOW	5:MED-MED	Rebuild/Thick Overlay
15	RIVERSIDE ST	N HAYES AVE	N WARDWELL AVE	2	237	32	9/1/2011	8:HIGH-MED	8:HIGH-MED	0:NONE	4:MED-LOW	5:MED-MED	Rebuild/Thick Overlay
22	RIVERSIDE ST	N WARDWELL AVE	WALNUT ST	8	409	32	10/9/2014	2:LOW-MED	3:LOW-HIGH	0:NONE	2:LOW-MED	3:LOW-HIGH	Crack Seal
29	RIVERSIDE ST	MONROE ST	N. JOHNS AVE	12	352	32	10/9/2014	0:NONE	0:NONE	0:NONE	0:NONE	1:LOW-LOW	Crack Seal
30	RIVERSIDE ST	WALNUT ST	MONROE ST	6	500	16	10/9/2014	2:LOW-MED	6:MED-HIGH	0:NONE	7:HIGH-LOW	6:MED-HIGH	Patching
331	ROCKY ST	SHASTA DR	WHITNEY DR	4	303	32	10/9/2014	3:LOW-HIGH	0:NONE	0:NONE	3:LOW-HIGH	9:HIGH-HIGH	Rebuild/Thick Overlay
333	ROCKY ST	WHITNEY DR	RAINIER DR	4	206	32	10/9/2014	3:LOW-HIGH	0:NONE	0:NONE	3:LOW-HIGH	9:HIGH-HIGH	Rebuild/Thick Overlay
536	ROYALTY AVE	PRINCESS ST	MONARCH ST	12	952	33	5/22/2014	0:NONE	1:LOW-LOW	1:LOW-LOW	1:LOW-LOW	0:NONE	No Maintenance
537	ROYALTY AVE	PRINCESS ST	E 12TH ST	12	172	33	5/22/2014	0:NONE	0:NONE	0:NONE	0:NONE	1:LOW-LOW	Crack Seal
522	S BEAVER CREEK WAY	PROSPECT WAY	E MARSH CREEK RD	20	801	32	5/22/2014	0:NONE	0:NONE	0:NONE	0:NONE	0:NONE	No Maintenance
359	S BLACKFOOT AVE	END	END	10	135	32	10/9/2014	0:NONE	4:MED-LOW	0:NONE	0:NONE	0:NONE	Crack Seal
149	S BOISE AVE	W MAIN ST	W 1ST ST	4	373	32	10/9/2014	6:MED-HIGH	9:HIGH-HIGH	1:LOW-LOW	1:LOW-LOW	3:LOW-HIGH	Overlay
181	S BOISE AVE	W 1ST ST	W 2ND ST	4	360	32	10/9/2014	6:MED-HIGH	9:HIGH-HIGH	0:NONE	0:NONE	3:LOW-HIGH	Overlay
225	S BOISE AVE	W 2ND ST	3RD ST	2	372	32	10/9/2014	8:HIGH-MED	9:HIGH-HIGH	0:NONE	7:HIGH-LOW	8:HIGH-MED	Rebuild/Thick Overlay
246	S BOISE AVE	3RD ST	4TH ST	4	238	32	10/9/2014	3:LOW-HIGH	9:HIGH-HIGH	0:NONE	0:NONE	6:MED-HIGH	Overlay
282	S BOISE AVE	4TH ST	5TH ST	4	364	32	10/9/2014	6:MED-HIGH	3:LOW-HIGH	0:NONE	7:HIGH-LOW	6:MED-HIGH	Rebuild/Thick Overlay
303	S BOISE AVE	5TH ST	6TH ST	4	380	32	10/9/2014	6:MED-HIGH	3:LOW-HIGH	0:NONE	7:HIGH-LOW	6:MED-HIGH	Rebuild/Thick Overlay
383	S BOISE AVE	6TH ST	10 ST	4	1235	32	10/9/2014	6:MED-HIGH	5:MED-MED	7:HIGH-LOW	9:HIGH-HIGH	9:HIGH-HIGH	Rebuild/Thick Overlay
414	S BOISE AVE	10 ST	W 12TH ST	4	678	32	10/9/2014	6:MED-HIGH	0:NONE	0:NONE	7:HIGH-LOW	3:LOW-HIGH	Rebuild/Thick Overlay
461	S BOISE AVE	W 12TH ST	HWY 52	4	1238	32	10/9/2014	3:LOW-HIGH	1:LOW-LOW	0:NONE	3:LOW-HIGH	9:HIGH-HIGH	Rebuild/Thick Overlay
372	S CHEROKEE AVE	W APACHE ST	W COMMANCHE ST	10	390	32	10/9/2014	1:LOW-LOW	2:LOW-MED	0:NONE	0:NONE	0:NONE	Crack Seal
392	S CHEROKEE AVE	W COMMANCHE ST	W NAVAJO ST	6	438	32	10/9/2014	2:LOW-MED	6:MED-HIGH	4:MED-LOW	0:NONE	0:NONE	Chip Seal
398	S CHEROKEE AVE	W NAVAJO ST	W CHEYENNE CT	6	285	32	10/9/2014	2:LOW-MED	8:HIGH-MED	0:NONE	0:NONE	5:MED-MED	Overlay
406	S CHEROKEE AVE	W CHEYENNE CT	W 12TH ST	6	176	32	10/9/2014	2:LOW-MED	8:HIGH-MED	0:NONE	0:NONE	5:MED-MED	Overlay
148	S COMMERCIAL AVE	W 1ST ST	W MAIN ST	0	375	32	10/9/2014	9:HIGH-HIGH	0:NONE	0:NONE	0:NONE	0:NONE	Rebuild/Thick Overlay
180	S COMMERCIAL AVE	W 2ND ST	W 1ST ST	0	360	32	10/9/2014	9:HIGH-HIGH	9:HIGH-HIGH	0:NONE	9:HIGH-HIGH	0:NONE	Rebuild/Thick Overlay
223	S COMMERCIAL AVE	3RD ST	W 2ND ST	2	371	32	10/9/2014	8:HIGH-MED	9:HIGH-HIGH	0:NONE	4:MED-LOW	0:NONE	Rebuild/Thick Overlay
248	S COMMERCIAL AVE	4TH ST	3RD ST	10	241	32	10/9/2014	0:NONE	4:MED-LOW	0:NONE	0:NONE	0:NONE	Crack Seal
283	S COMMERCIAL AVE	5TH ST	4TH ST	4	376	32	10/9/2014	4:MED-LOW	9:HIGH-HIGH	0:NONE	4:MED-LOW	0:NONE	Overlay
306	S COMMERCIAL AVE	6TH ST	5TH ST	6	381	32	10/9/2014	1:LOW-LOW	8:HIGH-MED	0:NONE	5:MED-MED	0:NONE	Overlay
322	S COMMERCIAL AVE	END	6TH ST	8	97	32	10/9/2014	4:MED-LOW	4:MED-LOW	0:NONE	4:MED-LOW	5:MED-MED	Patching
384	S COMMERCIAL AVE	10 ST	END	20	829	32	10/9/2014	0:NONE	0:NONE	0:NONE	0:NONE	0:NONE	No Maintenance
416	S COMMERCIAL AVE	W 12TH ST	10 ST	6	681	32	10/9/2014	3:LOW-HIGH	3:LOW-HIGH	0:NONE	4:MED-LOW	5:MED-MED	Chip Seal
529	S FUJI AVE	QUEEN ANN AVE	N END	12	118	30	5/22/2014	0:NONE	0:NONE	0:NONE	0:NONE	1:LOW-LOW	Crack Seal
150	S HAYES AVE	E 1ST ST	E MAIN ST	4	371	32	10/9/2014	6:MED-HIGH	9:HIGH-HIGH	0:NONE	7:HIGH-LOW	4:MED-LOW	Overlay
187	S HAYES AVE	E 2ND ST	E 1ST ST	4	365	32	10/9/2014	6:MED-HIGH	9:HIGH-HIGH	0:NONE	0:NONE	0:NONE	Overlay
221	S HAYES AVE	3RD ST	E 2ND ST	2	364	32	10/9/2014	8:HIGH-MED	3:LOW-HIGH	0:NONE	3:LOW-HIGH	0:NONE	Rebuild/Thick Overlay
253	S HAYES AVE	4TH ST	3RD ST	12	251	32	10/9/2014	0:NONE	1:LOW-LOW	0:NONE	0:NONE	0:NONE	No Maintenance
287	S HAYES AVE	5TH ST	4TH ST	6	381	32	10/9/2014	2:LOW-MED	2:LOW-MED	0:NONE	9:HIGH-HIGH	3:LOW-HIGH	Overlay
310	S HAYES AVE	6TH ST	5TH ST	6	388	32	10/9/2014	5:MED-MED	5:MED-MED	0:NONE	5:MED-MED	8:HIGH-MED	Overlay
389	S HAYES AVE	E 10TH ST	6TH ST	4	1345	32	10/9/2014	2:LOW-MED	6:MED-HIGH	7:HIGH-LOW	8:HIGH-MED	9:HIGH-HIGH	Rebuild/Thick Overlay
420	S HAYES AVE	E 12TH ST	E 10TH ST	6	556	32	10/9/2014	2:LOW-MED	2:LOW-MED	0:NONE	8:HIGH-MED	8:HIGH-MED	Overlay
156	S MCKINLEY AVE	E MAIN ST	E 1ST ST	4	363	32	10/9/2014	6:MED-HIGH	6:MED-HIGH	0:NONE	9:HIGH-HIGH	8:HIGH-MED	Rebuild/Thick Overlay
192	S MCKINLEY AVE	E 1ST ST	E 2ND ST	4	365	32	10/9/2014	3:LOW-HIGH	6:MED-HIGH	0:NONE	8:HIGH-MED	9:HIGH-HIGH	Rebuild/Thick Overlay

Segment ID	Road Name	From Address	To Address	Current RSL	Length (ft)	Width (ft)	Rating Date	Fatigue	Transverse	Longitudinal	Patching	Edge	Recommended Treatment
234	S MCKINLEY AVE	E 2ND ST	3RD ST	6	367	32	10/9/2014	3:LOW-HIGH	3:LOW-HIGH	0:NONE	7:HIGH-LOW	8:HIGH-MED	Overlay
257	S MCKINLEY AVE	3RD ST	4TH ST	4	271	32	10/9/2014	3:LOW-HIGH	6:MED-HIGH	1:LOW-LOW	8:HIGH-MED	9:HIGH-HIGH	Rebuild/Thick Overlay
377	S MCKINLEY AVE	S WARDWELL AVE	7TH ST	4	651	32	10/9/2014	3:LOW-HIGH	6:MED-HIGH	0:NONE	9:HIGH-HIGH	9:HIGH-HIGH	Rebuild/Thick Overlay
501	S MILL RD	DITTMAN DR	W MAIN ST	6	291	32	5/22/2014	5:MED-MED	0:NONE	0:NONE	0:NONE	0:NONE	Overlay
502	S MILL RD	DITTMAN DR	HOMESTEAD DR	8	420	32	5/22/2014	0:NONE	5:MED-MED	0:NONE	0:NONE	0:NONE	Chip Seal
510	S MILL RD	HOMESTEAD DR	APACHE ST	8	581	32	5/22/2014	0:NONE	0:NONE	1:LOW-LOW	0:NONE	7:HIGH-LOW	Patching
518	S MILL RD	CITY LIMIT	SCHOOL BUS ROAD	20	416	20	8/5/2014	0:NONE	0:NONE	0:NONE	0:NONE	0:NONE	No Maintenance
390	S PAWNEE AVE	W NAVAJO ST	W APACHE ST	8	818	32	10/9/2014	1:LOW-LOW	3:LOW-HIGH	0:NONE	0:NONE	5:MED-MED	Patching
393	S PAWNEE AVE	W NAVAJO ST	W NAVAJO ST	10	36	32	10/9/2014	0:NONE	4:MED-LOW	0:NONE	0:NONE	2:LOW-MED	Crack Seal
158	S WARDWELL AVE	E MAIN ST	E 1ST ST	6	373	32	10/9/2014	5:MED-MED	6:MED-HIGH	4:MED-LOW	0:NONE	6:MED-HIGH	Patching
188	S WARDWELL AVE	E 1ST ST	E 2ND ST	4	358	32	10/9/2014	4:MED-LOW	9:HIGH-HIGH	0:NONE	0:NONE	9:HIGH-HIGH	Rebuild/Thick Overlay
231	S WARDWELL AVE	E 2ND ST	3RD ST	4	371	32	10/9/2014	7:HIGH-LOW	9:HIGH-HIGH	0:NONE	5:MED-MED	9:HIGH-HIGH	Rebuild/Thick Overlay
255	S WARDWELL AVE	3RD ST	4TH ST	6	253	32	10/9/2014	3:LOW-HIGH	6:MED-HIGH	0:NONE	8:HIGH-MED	4:MED-LOW	Chip Seal
340	S WARDWELL AVE	6TH ST	7TH ST	8	381	32	10/9/2014	2:LOW-MED	0:NONE	0:NONE	0:NONE	2:LOW-MED	Chip Seal
378	S WARDWELL AVE	7TH ST	S MCKINLEY AVE	4	712	32	10/9/2014	3:LOW-HIGH	0:NONE	0:NONE	9:HIGH-HIGH	9:HIGH-HIGH	Rebuild/Thick Overlay
153	S WASHINGTON AVE	W MAIN ST	E 1ST ST	0	376	32	0	0	0	0	0	0	0
184	S WASHINGTON AVE	E 1ST ST	E 2ND ST	0	358	32	0	0	0	0	0	0	0
224	S WASHINGTON AVE	W 2ND ST	3RD ST	0	371	32	0	0	0	0	0	0	0
250	S WASHINGTON AVE	3RD ST	4TH ST	0	240	32	0	0	0	0	0	0	0
285	S WASHINGTON AVE	4TH ST	5TH ST	0	383	32	0	0	0	0	0	0	0
308	S WASHINGTON AVE	5TH ST	6TH ST	0	378	32	0	0	0	0	0	0	0
386	S WASHINGTON AVE	6TH ST	10 ST	20	1228	32	10/9/2014	0:NONE	0:NONE	0:NONE	0:NONE	0:NONE	No Maintenance
418	S WASHINGTON AVE	10 ST	W 12TH ST	0	685	32	0	0	0	0	0	0	0
463	S WASHINGTON AVE	E 12TH ST	HWY 52	6	1233	32	9/1/2011	3:LOW-HIGH	6:MED-HIGH	6:MED-HIGH	1:LOW-LOW	0:NONE	Chip Seal
469	S WASHINGTON AVE	HWY 16	END	4	189	32	10/9/2014	5:MED-MED	9:HIGH-HIGH	0:NONE	1:LOW-LOW	0:NONE	Overlay
163	S. DECLARK	E MAIN ST	E 1ST ST	6	371	32	10/9/2014	3:LOW-HIGH	3:LOW-HIGH	0:NONE	8:HIGH-MED	3:LOW-HIGH	Chip Seal
196	S. DECLARK	E 1ST ST	E 2ND ST	8	362	32	10/9/2014	1:LOW-LOW	3:LOW-HIGH	0:NONE	0:NONE	5:MED-MED	Patching
209	S. DECLARK	E 2ND ST	3RD ST	8	334	32	10/9/2014	0:NONE	3:LOW-HIGH	0:NONE	2:LOW-MED	1:LOW-LOW	Chip Seal
265	S. DECLARK	3RD ST	4TH ST	6	321	32	10/9/2014	5:MED-MED	2:LOW-MED	0:NONE	0:NONE	2:LOW-MED	Overlay
296	S. DECLARK	4TH ST	5TH ST	4	381	32	10/9/2014	3:LOW-HIGH	3:LOW-HIGH	0:NONE	5:MED-MED	9:HIGH-HIGH	Rebuild/Thick Overlay
312	S. DECLARK	5TH ST	HAZEL AVE	4	358	32	10/9/2014	3:LOW-HIGH	2:LOW-MED	0:NONE	5:MED-MED	9:HIGH-HIGH	Rebuild/Thick Overlay
324	S. DECLARK	HAZEL AVE	END	4	141	32	10/9/2014	3:LOW-HIGH	2:LOW-MED	0:NONE	5:MED-MED	9:HIGH-HIGH	Rebuild/Thick Overlay
191	S. HAWTHORNE AVE	E 2ND ST	E 1ST ST	4	365	32	10/9/2014	6:MED-HIGH	9:HIGH-HIGH	0:NONE	5:MED-MED	3:LOW-HIGH	Overlay
229	S. HAWTHORNE AVE	3RD ST	E 2ND ST	4	368	32	10/9/2014	5:MED-MED	9:HIGH-HIGH	0:NONE	8:HIGH-MED	8:HIGH-MED	Overlay
290	S. HAWTHORNE AVE	5TH ST	4TH ST	8	375	32	10/9/2014	2:LOW-MED	3:LOW-HIGH	0:NONE	5:MED-MED	0:NONE	Chip Seal
315	S. HAWTHORNE AVE	6TH ST	5TH ST	6	394	32	10/9/2014	5:MED-MED	0:NONE	0:NONE	0:NONE	0:NONE	Overlay
345	S. HAWTHORNE AVE	7TH ST	6TH ST	6	382	32	10/9/2014	5:MED-MED	5:MED-MED	0:NONE	3:LOW-HIGH	4:MED-LOW	Overlay
369	S. HAWTHORNE AVE	PEACH ST	END	4	280	32	10/9/2014	2:LOW-MED	0:NONE	0:NONE	8:HIGH-MED	9:HIGH-HIGH	Rebuild/Thick Overlay
376	S. HAWTHORNE AVE	END	PEACH ST	4	103	32	10/9/2014	2:LOW-MED	0:NONE	0:NONE	8:HIGH-MED	9:HIGH-HIGH	Rebuild/Thick Overlay
160	S. JOHNS AVE	E 1ST ST	E MAIN ST	4	365	32	10/9/2014	2:LOW-MED	9:HIGH-HIGH	0:NONE	0:NONE	0:NONE	Overlay
193	S. JOHNS AVE	E 2ND ST	E 1ST ST	4	362	32	10/9/2014	6:MED-HIGH	8:HIGH-MED	0:NONE	8:HIGH-MED	2:LOW-MED	Rebuild/Thick Overlay
208	S. JOHNS AVE	3RD ST	E 2ND ST	4	339	32	10/9/2014	6:MED-HIGH	8:HIGH-MED	0:NONE	8:HIGH-MED	2:LOW-MED	Rebuild/Thick Overlay
260	S. JOHNS AVE	4TH ST	3RD ST	4	316	32	10/9/2014	6:MED-HIGH	8:HIGH-MED	0:NONE	8:HIGH-MED	2:LOW-MED	Rebuild/Thick Overlay
292	S. JOHNS AVE	5TH ST	4TH ST	4	379	32	10/9/2014	6:MED-HIGH	8:HIGH-MED	0:NONE	8:HIGH-MED	2:LOW-MED	Rebuild/Thick Overlay
317	S. JOHNS AVE	6TH ST	5TH ST	6	394	32	10/9/2014	5:MED-MED	8:HIGH-MED	0:NONE	8:HIGH-MED	0:NONE	Overlay
348	S. JOHNS AVE	7TH ST	6TH ST	6	373	32	10/9/2014	3:LOW-HIGH	8:HIGH-MED	4:MED-LOW	7:HIGH-LOW	0:NONE	Overlay
363	S. JOHNS AVE	LYNN DR	7TH ST	8	210	32	10/9/2014	0:NONE	7:HIGH-LOW	7:HIGH-LOW	7:HIGH-LOW	1:LOW-LOW	Patching
370	S. JOHNS AVE	PEACH ST	LYNN DR	4	249	32	10/9/2014	0:NONE	0:NONE	7:HIGH-LOW	7:HIGH-LOW	9:HIGH-HIGH	Rebuild/Thick Overlay
424	S. JOHNS AVE	E 12TH ST	PEACH ST	2	1037	32	10/9/2014	8:HIGH-MED	8:HIGH-MED	7:HIGH-LOW	7:HIGH-LOW	0:NONE	Rebuild/Thick Overlay
442	S. JOHNS AVE	INDEPENDENCE LN	E 12TH ST	10	148	32	10/9/2014	0:NONE	0:NONE	5:MED-MED	5:MED-MED	2:LOW-MED	Crack Seal
456	S. JOHNS AVE	LIBERTY LN	INDEPENDENCE LN	10	458	32	10/9/2014	0:NONE	0:NONE	5:MED-MED	5:MED-MED	2:LOW-MED	Crack Seal
467	S. JOHNS AVE	HWY 16	LIBERTY LN	6	614	32	10/9/2014	2:LOW-MED	6:MED-HIGH	1:LOW-LOW	0:NONE	0:NONE	Chip Seal
547	SANDHOLLOW RD	HWY 16	E 12TH ST	4	0	21	5/22/2014	6:MED-HIGH	9:HIGH-HIGH	0:NONE	6:MED-HIGH	9:HIGH-HIGH	Rebuild/Thick Overlay
601	SERVICE AVE	ENTERPRISE ST	HWY 16	4	0	32	5/22/2014	6:MED-HIGH	9:HIGH-HIGH	0:NONE	0:NONE	0:NONE	Overlay
33	SHADOW RIDGE CIR	BUTTE VIEW CIR	END	4	275	32	10/9/2014	6:MED-HIGH	0:NONE	0:NONE	2:LOW-MED	9:HIGH-HIGH	Rebuild/Thick Overlay
319	SHASTA DR	WHITNEY DR	RAINIER DR	8	208	32	10/9/2014	2:LOW-MED	1:LOW-LOW	0:NONE	0:NONE	3:LOW-HIGH	Crack Seal

Segment ID	Road Name	From Address	To Address	Current RSL	Length (ft)	Width (ft)	Rating Date	Fatigue	Transverse	Longitudinal	Patching	Edge	Recommended Treatment
321	SHASTA DR	RAINIER DR	MONTE VISTA DR	6	205	32	10/9/2014	5:MED-MED	2:LOW-MED	0:NONE	6:MED-HIGH	6:MED-HIGH	Patching
329	SHASTA DR	ROCKY ST	WHITNEY DR	4	483	32	10/9/2014	3:LOW-HIGH	4:MED-LOW	0:NONE	7:HIGH-LOW	9:HIGH-HIGH	Rebuild/Thick Overlay
354	SHASTA DR	CASCDE ST	ROCKY ST	4	220	32	10/9/2014	3:LOW-HIGH	7:HIGH-LOW	0:NONE	6:MED-HIGH	9:HIGH-HIGH	Rebuild/Thick Overlay
515	SIOUX AVE	APACHE ST	COMANCHE TR	20	393	32	5/22/2014	0:NONE	0:NONE	0:NONE	0:NONE	0:NONE	No Maintenance
374	STONE DR	GEMSTONE WAY	END	8	138	32	10/9/2014	2:LOW-MED	0:NONE	0:NONE	0:NONE	4:MED-LOW	Chip Seal
334	SUBSTATION RD	SUBD	END	6	212	32	10/9/2014	3:LOW-HIGH	0:NONE	0:NONE	4:MED-LOW	5:MED-MED	Chip Seal
364	SUBSTATION RD	S. PLAZA RD	SUBD	12	280	32	10/9/2014	0:NONE	1:LOW-LOW	0:NONE	4:MED-LOW	0:NONE	No Maintenance
379	SUBSTATION RD	FELTAM PEAK DR	S. PLAZA RD	12	370	32	10/9/2014	0:NONE	0:NONE	1:LOW-LOW	4:MED-LOW	0:NONE	No Maintenance
432	SUBSTATION RD	EAST 12TH ST	FELTAM PEAK DR	10	946	32	10/9/2014	1:LOW-LOW	0:NONE	1:LOW-LOW	4:MED-LOW	0:NONE	No Maintenance
435	SUBSTATION RD	E 12TH ST	EAST 12TH ST	20	5	32	10/9/2014	0:NONE	0:NONE	0:NONE	0:NONE	0:NONE	No Maintenance
143	SUNNY LN	VISTA DR	E MAIN ST	6	268	32	10/9/2014	5:MED-MED	6:MED-HIGH	0:NONE	7:HIGH-LOW	0:NONE	Chip Seal
173	SUNNY LN	END	VISTA DR	8	465	32	10/9/2014	2:LOW-MED	0:NONE	0:NONE	6:MED-HIGH	0:NONE	Chip Seal
73	TERRY DR	N. DECLARK	END	4	322	32	10/9/2014	6:MED-HIGH	2:LOW-MED	0:NONE	0:NONE	5:MED-MED	Rebuild/Thick Overlay
401	VANITY PEAK DR	PINYON PEAK ST	FELTAM PEAK DR	8	650	32	10/9/2014	0:NONE	7:HIGH-LOW	0:NONE	1:LOW-LOW	0:NONE	Patching
172	VISTA DR	PINE AVE	SUNNY LN	6	1006	32	10/9/2014	7:HIGH-LOW	0:NONE	0:NONE	9:HIGH-HIGH	2:LOW-MED	Overlay
407	W 12TH ST	END	S CHEROKEE AVE	20	169	32	10/9/2014	0:NONE	0:NONE	0:NONE	0:NONE	0:NONE	No Maintenance
409	W 12TH ST	S CHEROKEE AVE	JOHNSON AVE	8	624	32	10/9/2014	0:NONE	5:MED-MED	1:LOW-LOW	4:MED-LOW	0:NONE	Chip Seal
411	W 12TH ST	JOHNSON AVE	WILLIAMS RD	8	354	32	10/9/2014	2:LOW-MED	5:MED-MED	0:NONE	0:NONE	0:NONE	Chip Seal
413	W 12TH ST	WILLIAMS RD	LINCOLN AVE	10	621	32	10/9/2014	0:NONE	2:LOW-MED	4:MED-LOW	7:HIGH-LOW	0:NONE	Patching
415	W 12TH ST	LINCOLN AVE	S BOISE AVE	8	119	32	10/9/2014	1:LOW-LOW	5:MED-MED	0:NONE	0:NONE	0:NONE	Chip Seal
417	W 12TH ST	S BOISE AVE	S COMMERCIAL AVE	10	360	32	10/9/2014	1:LOW-LOW	0:NONE	0:NONE	0:NONE	0:NONE	No Maintenance
419	W 12TH ST	S COMMERCIAL AVE	S WASHINGTON AVE	8	359	32	10/9/2014	1:LOW-LOW	0:NONE	0:NONE	8:HIGH-MED	0:NONE	Overlay
147	W 1ST ST	LINCOLN AVE	MURRAY AVE	4	355	32	10/9/2014	6:MED-HIGH	9:HIGH-HIGH	0:NONE	0:NONE	0:NONE	Overlay
151	W 1ST ST	S COMMERCIAL AVE	S BOISE AVE	4	352	32	10/9/2014	5:MED-MED	9:HIGH-HIGH	1:LOW-LOW	0:NONE	2:LOW-MED	Overlay
152	W 1ST ST	MURRAY AVE	W MAIN ST	4	632	32	10/9/2014	6:MED-HIGH	0:NONE	4:MED-LOW	7:HIGH-LOW	0:NONE	Rebuild/Thick Overlay
178	W 2ND ST	WILSON AVE	MCAULIFFE AVE	8	360	32	10/9/2014	2:LOW-MED	4:MED-LOW	0:NONE	3:LOW-HIGH	0:NONE	Chip Seal
179	W 2ND ST	LINCOLN AVE	MURRAY AVE	8	356	32	10/9/2014	2:LOW-MED	4:MED-LOW	0:NONE	2:LOW-MED	0:NONE	Chip Seal
182	W 2ND ST	S COMMERCIAL AVE	S BOISE AVE	4	348	32	10/9/2014	2:LOW-MED	9:HIGH-HIGH	0:NONE	0:NONE	3:LOW-HIGH	Overlay
183	W 2ND ST	S BOISE AVE	LINCOLN AVE	4	139	32	10/9/2014	3:LOW-HIGH	9:HIGH-HIGH	0:NONE	0:NONE	0:NONE	Overlay
185	W 2ND ST	S WASHINGTON AVE	S COMMERCIAL AVE	4	364	32	10/9/2014	2:LOW-MED	9:HIGH-HIGH	0:NONE	3:LOW-HIGH	1:LOW-LOW	Overlay
186	W 2ND ST	MURRAY AVE	WILSON AVE	6	362	32	10/9/2014	2:LOW-MED	6:MED-HIGH	0:NONE	3:LOW-HIGH	0:NONE	Chip Seal
301	W 6TH ST	LINCOLN AVE	END	8	185	16	10/9/2014	2:LOW-MED	0:NONE	0:NONE	3:LOW-HIGH	3:LOW-HIGH	Crack Seal
360	W APACHE ST	S CHEROKEE AVE	SIOUX AVE	8	236	32	10/9/2014	0:NONE	5:MED-MED	0:NONE	0:NONE	0:NONE	Chip Seal
361	W APACHE ST	S PAWNEE AVE	S CHEROKEE AVE	8	252	32	10/9/2014	0:NONE	5:MED-MED	0:NONE	0:NONE	0:NONE	Chip Seal
362	W APACHE ST	END	S PAWNEE AVE	8	122	32	10/9/2014	1:LOW-LOW	3:LOW-HIGH	0:NONE	0:NONE	0:NONE	Chip Seal
399	W CHEYENNE CT	S CHEROKEE AVE	END	6	300	32	10/9/2014	4:MED-LOW	8:HIGH-MED	4:MED-LOW	0:NONE	0:NONE	Overlay
375	W COMMANCHE ST	S CHEROKEE AVE	SIOUX ST	20	276	32	10/9/2014	0:NONE	0:NONE	0:NONE	0:NONE	0:NONE	No Maintenance
110	W MAIN ST	N COMMERCIAL AVE	S BOISE AVE	20	348	32	9/1/2011	0:NONE	0:NONE	0:NONE	0:NONE	0:NONE	No Maintenance
112	W MAIN ST	S BOISE AVE	LINCOLN AVE	10	103	32	9/1/2011	0:NONE	4:MED-LOW	0:NONE	0:NONE	0:NONE	Crack Seal
115	W MAIN ST	S WASHINGTON AVE	S COMMERCIAL AVE	20	358	32	9/1/2011	0:NONE	0:NONE	0:NONE	0:NONE	0:NONE	No Maintenance
119	W MAIN ST	LINCOLN AVE	MURRAY AVE	8	402	32	10/9/2014	2:LOW-MED	5:MED-MED	1:LOW-LOW	0:NONE	0:NONE	Chip Seal
120	W MAIN ST	MURRAY AVE	CANAL ST	8	13	32	10/9/2014	2:LOW-MED	5:MED-MED	1:LOW-LOW	0:NONE	0:NONE	Chip Seal
141	W MAIN ST	CANAL ST	WILSON AVE	6	384	32	10/9/2014	2:LOW-MED	6:MED-HIGH	0:NONE	0:NONE	0:NONE	Chip Seal
144	W MAIN ST	WILSON AVE	W 1ST ST	6	324	32	10/9/2014	0:NONE	6:MED-HIGH	0:NONE	0:NONE	2:LOW-MED	Chip Seal
170	W MAIN ST	W 1ST ST	MCAULIFFE AVE	6	116	32	10/9/2014	3:LOW-HIGH	6:MED-HIGH	0:NONE	0:NONE	0:NONE	Chip Seal
237	W MAIN ST	MCAULIFFE AVE	4TH ST	6	1440	32	10/9/2014	3:LOW-HIGH	6:MED-HIGH	0:NONE	4:MED-LOW	6:MED-HIGH	Patching
500	W MAIN ST	4TH ST	S MILL RD	14	301	32	10/9/2014	0:NONE	0:NONE	0:NONE	1:LOW-LOW	0:NONE	No Maintenance
391	W NAVAJO ST	S PAWNEE AVE	S PAWNEE AVE	10	28	32	10/9/2014	0:NONE	4:MED-LOW	0:NONE	0:NONE	2:LOW-MED	Crack Seal
394	W NAVAJO ST	S CHEROKEE AVE	S PAWNEE AVE	8	235	32	10/9/2014	2:LOW-MED	3:LOW-HIGH	0:NONE	0:NONE	7:HIGH-LOW	Patching
395	W NAVAJO ST	S PAWNEE AVE	S PAWNEE AVE	10	60	32	10/9/2014	0:NONE	4:MED-LOW	0:NONE	0:NONE	2:LOW-MED	Crack Seal
108	W PARK ST	N WASHINGTON AVE	N COMMERCIAL AVE	8	391	32	10/9/2014	1:LOW-LOW	0:NONE	0:NONE	0:NONE	7:HIGH-LOW	Patching
34	WALNUT ST	RIVERSIDE ST	MONROE ST	6	361	20	10/9/2014	0:NONE	6:MED-HIGH	0:NONE	9:HIGH-HIGH	6:MED-HIGH	Patching
56	WALNUT ST	MONROE ST	N WARDWELL AVE	6	445	20	10/9/2014	4:MED-LOW	4:MED-LOW	0:NONE	9:HIGH-HIGH	5:MED-MED	Overlay
330	WHITNEY DR	SHASTA DR	ROCKY ST	8	207	32	10/9/2014	2:LOW-MED	0:NONE	0:NONE	3:LOW-HIGH	7:HIGH-LOW	Patching
277	WILLIAMS RD	5TH ST	4TH ST	8	353	32	10/9/2014	2:LOW-MED	0:NONE	0:NONE	0:NONE	2:LOW-MED	Chip Seal
304	WILLIAMS RD	6TH ST	5TH ST	6	417	32	10/9/2014	3:LOW-HIGH	0:NONE	0:NONE	0:NONE	3:LOW-HIGH	Chip Seal

Segment ID	Road Name	From Address	To Address	Current RSL	Length (ft)	Width (ft)	Rating Date	Fatigue	Transverse	Longitudinal	Patching	Edge	Recommended Treatment
326	WILLIAMS RD	JADE PL	6TH ST	6	229	32	10/9/2014	3:LOW-HIGH	0:NONE	0:NONE	6:MED-HIGH	0:NONE	Chip Seal
410	WILLIAMS RD	W 12TH ST	JADE PL	6	1646	32	10/9/2014	3:LOW-HIGH	3:LOW-HIGH	0:NONE	3:LOW-HIGH	3:LOW-HIGH	Chip Seal
142	WILSON AVE	W MAIN ST	END	10	106	32	10/9/2014	0:NONE	1:LOW-LOW	0:NONE	1:LOW-LOW	2:LOW-MED	Crack Seal
219	WILSON AVE	W 2ND ST	3RD ST	20	370	32	10/9/2014	0:NONE	0:NONE	0:NONE	0:NONE	0:NONE	No Maintenance
240	WILSON AVE	3RD ST	4TH ST	20	228	32	10/9/2014	0:NONE	0:NONE	0:NONE	0:NONE	0:NONE	No Maintenance

Appendix I

Traffic Sign Inventory

THIS PAGE INTENTIONALLY LEFT BLANK

Sign ID	Support ID	MUTCD	Facing	Backing	Face Material	Visibility	Sign Condition	Photo No.	Sign Text	Length (in)	Width (in)	Height (in)	Num. Text	Num. Size (in)	Text Size (in)	Offset (ft)	Inspector	Road Name	Location Desc.	Travel Direction	Post Type	Post Size	Post Base	Post Pos.	Post Mat'l.	Date Insp.	Post Rating	Latitude	Longitude
1	1	D3	W	Aluminum	Engineer Grade	Clear	Good	1	S FUJI AVE	6	18	9		0	4	8	TSJ	QUEEN ANNE DR	S FUJI AVE		Single Post	2x2	Soil	Right	Steel	8/11/2014	Acceptable	43.872323	-116.463413
2	1	D3	W	Aluminum	Engineer Grade	Clear	Good	1	QUEEN ANNE DR	6	32	9		0	4	8	TSJ	QUEEN ANNE DR	S FUJI AVE		Single Post	2x2	Soil	Right	Steel	8/11/2014	Acceptable	43.872323	-116.463413
3	2	R1-1	W	Aluminum	Engineer Grade	Clear	Good	2	STOP	30	30	7		0	10	9	TSJ	QUEEN ANNE DR	S FUJI AVE		Single Post	2x2	Soil	Right	Steel	8/11/2014	Acceptable	43.872189	-116.463417
4	3	D3	S	Aluminum	Engineer Grade	Clear	Good	3	MARIPOSA CT	6	32	8		0	4	8	TSJ	DUCHESS TRAIL	MARIPOSA CT	North	Single Post	2x2	Soil	Right	Steel	8/11/2014	Acceptable	43.872842	-116.467195
5	3	D3	W	Aluminum	Engineer Grade	Clear	Fair	3	DUCHESS TRAIL	6	32	8		0	4	8	TSJ	DUCHESS TRAIL	MARIPOSA CT	North	Single Post	2x2	Soil	Right	Steel	8/11/2014	Acceptable	43.872842	-116.467195
6	4	D3	N	Aluminum	Engineer Grade	Clear	Good	4	DUCHESS TRAIL	6	32	9		0	4	10	TSJ	QUEEN ANNE DR	DUCHESS TRAIL	West	Single Post	2x2	Soil	Right	Steel	8/11/2014	Acceptable	43.872286	-116.467179
7	4	D3	N	Aluminum	Engineer Grade	Clear	Good	4	QUEEN ANNE DR	6	32	9		0	4	10	TSJ	QUEEN ANNE DR	DUCHESS TRAIL	West	Single Post	2x2	Soil	Right	Steel	8/11/2014	Acceptable	43.872286	-116.467179
8	5	R1-1	N	Aluminum	Engineer Grade	Partially Obscured	Good	5	STOP	30	30	7		0	10	9	TSJ	DUCHESS TRAIL	QUEEN ANNE DR	South	Single Post	2x2	Soil	Right	Steel	8/11/2014	Acceptable	43.872324	-116.467422
9	6	D3	NW	Aluminum	Engineer Grade	Clear	Good	6	GALA TRAIL	6	32	9		0	4	15	TSJ	QUEEN ANNE DR	GALA TRAIL	North-East	Single Post	2x2	Soil	Right	Steel	8/11/2014	Acceptable	43.871778	-116.468475
10	6	D3	NW	Aluminum	Engineer Grade	Clear	Good	6	QUEEN ANNE DR	6	32	9		0	4	15	TSJ	QUEEN ANNE DR	GALA TRAIL	North-East	Single Post	2x2	Soil	Right	Steel	8/11/2014	Acceptable	43.871778	-116.468475
11	7	D3	NW	Aluminum	Engineer Grade	Tree Obscured	Good	7	MIMOSA LN	6	32	9		0	4	15	TSJ	QUEEN ANNE DR	MIMOSA LN	North-East	Single Post	2x2	Soil	Right	Steel	8/11/2014	Acceptable	43.870886	-116.469389
12	7	D3	NW	Aluminum	Engineer Grade	Tree Obscured	Good	7	QUEEN ANNE DR	6	32	9		0	4	15	TSJ	QUEEN ANNE DR	MIMOSA LN	North-East	Single Post	2x2	Soil	Right	Steel	8/11/2014	Acceptable	43.870886	-116.469389
13	8	D3	S	Aluminum	Engineer Grade	Clear	Good	8	QUEEN ANNE DR	6	32	9		0	4	10	TSJ	MIMOSA LN	QUEEN ANNE DR	West	Single Post	2x2	Soil	Right	Steel	8/11/2014	Acceptable	43.869454	-116.470886
14	8	D3	S	Aluminum	Engineer Grade	Clear	Good	8	MIMOSA LN	6	32	9		0	4	10	TSJ	MIMOSA LN	QUEEN ANNE DR	West	Single Post	2x2	Soil	Right	Steel	8/11/2014	Acceptable	43.869454	-116.470886
15	9	D3	SE	Aluminum	Engineer Grade	Partially Obscured	Good	8	GALA TRAIL	6	32	9		0	4	10	TSJ	ALBERTA AVE	GALA TRAIL	North-West	Single Post	2x2	Soil	Right	Steel	8/11/2014	Acceptable	43.8696	-116.468486
16	9	D3	SE	Aluminum	Engineer Grade	Partially Obscured	Good	9	ALBERTA AVE	6	32	9		0	4	10	TSJ	ALBERTA AVE	GALA TRAIL	North-West	Single Post	2x2	Soil	Right	Steel	8/11/2014	Acceptable	43.8696	-116.468486
17	9	R1-1	SE	Aluminum	Engineer Grade	Partially Obscured	Fair	9	STOP	30	30	7		0	10	10	TSJ	ALBERTA AVE	GALA TRAIL	North-West	Single Post	2x2	Soil	Right	Steel	8/11/2014	Acceptable	43.8696	-116.468486
18	10	D3	E	Aluminum	Engineer Grade	Clear	Good	10	QUEEN ANNE DR	6	32	9		0	4	10	TSJ	GALA TRAIL	QUEEN ANNE DR	West	Single Post	2x2	Soil	Right	Steel	8/11/2014	Repair	43.868794	-116.471877
19	10	D3	S	Aluminum	Engineer Grade	Clear	Good	10	GALA TRAIL	6	32	9		0	4	10	TSJ	GALA TRAIL	QUEEN ANNE DR	West	Single Post	2x2	Soil	Right	Steel	8/11/2014	Repair	43.868794	-116.471877
20	10	W9-11	E	Aluminum	Engineer Grade	Clear	Fair	10	CAUTION CHILDREN PLAYING	18	24	6		0	4	10	TSJ	GALA TRAIL	QUEEN ANNE DR	West	Single Post	2x2	Soil	Right	Steel	8/11/2014	Repair	43.868794	-116.471877
21	11	W9-11	W	Aluminum	Engineer Grade	Clear	Good	11	SLOW CHILDREN AT PLAY	33	33	8		0	3	10	TSJ	MIMOSA LN	2004 MIMOSA LN	East	Single Post	2x2	Soil	Right	Steel	8/11/2014	Acceptable	43.869309	-116.471872
22	12	R2-1-35	W	Aluminum	Engineer Grade	Tree Obscured	Poor	12	SPEED LIMIT	24	30	8	35	10	4	10	TSJ	E QUAIL RUN RD	PLAZA OFFICES	East	Single Post	2x2	Soil	Right	Steel	8/11/2014	Acceptable	43.868165	-116.471803
23	13	R1-1	W	Aluminum	Engineer Grade	Clear	Good	13	STOP	30	30	8		0	10	10	TSJ	ALBERTA AVE	E QUAIL RUN RD	South	Single Post	2x2	Soil	Right	Steel	8/11/2014	Acceptable	43.868368	-116.468384
24	13	D3	N	Aluminum	Engineer Grade	Clear	Good	13	E QUAIL RUN RD	6	32	10		0	4	10	TSJ	ALBERTA AVE	E QUAIL RUN RD	South	Single Post	2x2	Soil	Right	Steel	8/11/2014	Acceptable	43.868368	-116.468384
25	13	D3	W	Aluminum	Engineer Grade	Clear	Good	13	ALBERTA AVE	6	32	10		0	4	10	TSJ	ALBERTA AVE	E QUAIL RUN RD	South	Single Post	2x2	Soil	Right	Steel	8/11/2014	Acceptable	43.868368	-116.468384
26	14	I2-4	E	Aluminum	Engineer Grade	Clear	Good	14	EMMETT CITY LIMIT	18	24	8		0	4	7	TSJ	E QUAIL RUN RD	CITY LIMIT	West	Single Post	2x2	Soil	Right	Steel	8/11/2014	Acceptable	43.868317	-116.464866
27	14	R16-X12	E	Aluminum	Engineer Grade	Clear	Good	14	SPEED LIMIT 20 MPH UNLESS OTHERWISE POSTED	30	30	8	20	6	3	7	TSJ	E QUAIL RUN RD	CITY LIMIT	West	Single Post	2x2	Soil	Right	Steel	8/11/2014	Acceptable	43.868317	-116.464866
28	15	R2-1-35	E	Aluminum	Engineer Grade	Clear	Good	15	SPEED LIMIT	24	30	6	35	10	4	4	TSJ	E QUAIL RUN RD	W OF CITY LIMIT	West	Single Post	2x2	Soil	Right	Steel	8/11/2014	Acceptable	43.868303	-116.466
29	16	D3	S	Aluminum	Engineer Grade	Clear	Excellent	16	E QUAIL RUN RD	6	32	10		0	4	7	TSJ	REGENCY WAY	E QUAIL RUN RD	North	Single Post	2x2	Soil	Right	Steel	8/11/2014	Acceptable	43.868111	-116.467428
30	16	D3	E	Aluminum	Engineer Grade	Clear	Excellent	16	REGENCY WAY	6	32	10		0	4	7	TSJ	REGENCY WAY	E QUAIL RUN RD	North	Single Post	2x2	Soil	Right	Steel	8/11/2014	Acceptable	43.868111	-116.467428
31	16	R1-1	S	Aluminum	Engineer Grade	Clear	Fair	16	STOP	30	30	7		0	10	7	TSJ	REGENCY WAY	E QUAIL RUN RD	North	Single Post	2x2	Soil	Right	Steel	8/11/2014	Acceptable	43.868111	-116.467428
32	17	R2-1-20	N	Aluminum	Engineer Grade	Clear	Poor	17	SPEED LIMIT	18	24	7	20	6	3	7	TSJ	REGENCY WAY	E QUAIL RUN RD	South	Single Post	2x2	Soil	Right	Steel	8/11/2014	Acceptable	43.867968	-116.46761
33	18	D3	E	Aluminum	Engineer Grade	Clear	Good	18	REGENCY WAY	6	32	10		0	4	9	TSJ	MONARCH ST	REGENCY WAY	West	Single Post	2x2	Soil	Right	Steel	8/11/2014	Acceptable	43.86777	-116.467332
34	18	D3	E	Aluminum	Engineer Grade	Clear	Good	18	MONARCH ST	6	32	10		0	4	9	TSJ	MONARCH ST	REGENCY WAY	West	Single Post	2x2	Soil	Right	Steel	8/11/2014	Acceptable	43.86777	-116.467332
35	18	R1-2	E	Aluminum	Engineer Grade	Clear	Good	18	YIELD	30	30	7		0	3	9	TSJ	MONARCH ST	REGENCY WAY	West	Single Post	2x2	Soil	Right	Steel	8/11/2014	Acceptable	43.86777	-116.467332
36	19	D3	W	Aluminum	Engineer Grade	Clear	Good	19	PALACE AVE	6	32	9		0	4	9	TSJ	MONARCH ST	PALACE AVE	East	Single Post	2x2	Soil	Right	Steel	8/11/2014	Acceptable	43.867697	-116.46616
37	19	D3	S	Aluminum	Engineer Grade	Clear	Good	19	MONARCH ST	6	32	9		0	4	9	TSJ	MONARCH ST	PALACE AVE	East	Single Post	2x2	Soil	Right	Steel	8/11/2014	Acceptable	43.867697	-116.46616
38	20	D3	W	Aluminum	Engineer Grade	Clear	Good	20	ROYALTY AVE	6	32	9		0	4	9	TSJ	MONARCH ST	ROYALTY AVE	East	Single Post	2x2	Soil	Right	Steel	8/11/2014	Acceptable	43.867717	-116.46549
39	20	D3	S	Aluminum	Engineer Grade	Clear	Good	20	MONARCH ST	6	32	9		0	4	9	TSJ	MONARCH ST	ROYALTY AVE	East	Single Post	2x2	Soil	Right	Steel	8/11/2014	Acceptable	43.867717	-116.46549
40	21	D3	S	Aluminum	Engineer Grade	Partially Obscured	Good	21	ROYALTY AVE	6	32	9		0	4	7	TSJ	PRINCESS STREET	ROYALTY AVE	West	Single Post	2x2	Soil	Right	Steel	8/11/2014	Acceptable	43.865235	-116.46549
41	21	D3	S	Aluminum	Engineer Grade	Partially Obscured	Good	21	PRINCESS STREET	6	32	9		0	4	7	TSJ	PRINCESS STREET	ROYALTY AVE	West	Single Post	2x2	Soil	Right	Steel	8/11/2014	Acceptable	43.865235	-116.46549
42	22	D3	S	Aluminum	Engineer Grade	Partially Obscured	Good	22	PALACE AVE	6	32	9		0	4	8	TSJ	PRINCESS STREET	PALACE AVE	West	Single Post	2x2	Soil	Right	Steel	8/11/2014	Acceptable	43.865222	-116.466174
43	22	D3	S	Aluminum	Engineer Grade	Partially Obscured	Good	22	PRINCESS ST	6	32	9		0	4	8	TSJ	PRINCESS STREET	PALACE AVE	West	Single Post	2x2	Soil	Right	Steel	8/11/2014	Acceptable	43.865222	-116.466174
44	23	D3	E	Aluminum	Engineer Grade	Clear	Good	23	REGENCY WAY	6	32	9		0	4	8	TSJ	PRINCESS STREET	REGENCY WAY	West	Single Post	2x2	Soil	Right	Steel	8/11/2014	Acceptable	43.865207	-116.467173
45	23	D3	S	Aluminum	Engineer Grade	Clear	Excellent	23	PRINCESS STREET	6	32	9		0	4	8	TSJ	PRINCESS STREET	REGENCY WAY	West	Single Post	2x2	Soil	Right	Steel	8/11/2014	Acceptable	43.865207	-116.467173
46	24	D3	N	Aluminum	Engineer Grade	Clear	Good	24	E 12TH ST	6	32	9		0	4	3	TSJ	ROYALTY AVE	E 12TH ST	South	Single Post	2x2	Soil	Right	Steel	8/11/2014	Acceptable	43.864783	-116.465434
47	24	D3	E	Aluminum	Engineer Grade	Clear	Good	24	ROYALTY AVE	6	32	9		0	4	3	TSJ	ROYALTY AVE	E 12TH ST	South	Single Post	2x2	Soil	Right	Steel	8/11/2014	Acceptable	43.864783	-116.465434
48	24	R1-1	N	Aluminum	Engineer Grade	Clear	Good	24	STOP	30	30	7		0	10	3	TSJ	ROYALTY AVE	E 12TH ST	South	Single Post	2x2	Soil	Right	Steel	8/11/2014	Acceptable	43.864783	-116.465434
49	25	R2-1-20	S	Aluminum	Engineer Grade	Clear	Poor	25	SPEED LIMIT	18	24	7	20	6	3	3	TSJ	ROYALTY AVE	E 12TH ST	North	Single Post	2x2	Soil	Right	Steel	8/11/2014	Acceptable	43.86485	-116.465265
50	26	D3	N	Aluminum	Engineer Grade	Clear	Good	26	E 12TH ST	6	32	9		0	4	3	TSJ	REGENCY WAY	E 12TH ST	South	Single Post	2x2	Soil	Right	Steel	8/11/2014	Acceptable	43.864755	-116.467393
51	26	D3	E	Aluminum	Engineer Grade	Clear	Good	26	REGENCY WAY	6	32	9			4	3	TSJ	REGENCY WAY	E 12TH ST	South	Single Post	2x2	Soil	Right	Steel	8/11/2014	Acceptable	43.864755	-116.467393
52	26	R1-1	N	Aluminum	Engineer Grade	Clear	Good	26	STOP	30	30	7		0	10	3	TSJ	REGENCY WAY	E 12TH ST	South	Single Post	2x2	Soil	Right	Steel	8/11/2014	Acceptable	43.864755	-116.467393
53	27	R2-1-20	S	Aluminum	Engineer Grade	Clear	Poor	27	SPEED LIMIT	18	24	7	20	6	3	3	TSJ	REGENCY WAY	E 12TH ST	North	Single Post	2x2	Soil	Right	Steel	8/11/2014	Acceptable	43.86483	-116.467222
54	28	R2-1-20	W	Aluminum	Engineer Grade	Clear	Good	28	SPEED LIMIT	18	24	8	20	8	3	5	TSJ	E 12TH ST	ROYALTY AVE	East	Single Post	2x2	Soil	Right	Steel	8/11/2014	Acceptable	43.864631	-116.464177
55	29	W1-1R	W	Aluminum	Engineer Grade	Clear	Good	29		30	30	8		0	0	5	TSJ	E 12TH ST	ROYALTY AVE	East	Single Post	2x2	Soil	Right	Steel	8/11/2014	Acceptable	43.86463	-116.463485
56	30	R1-1	W	Aluminum	Engineer Grade	Clear	Fair	30	STOP	30	30	7		0	10	7	TSJ	CRYSTAL CREEK DR	E 12TH ST	South	Single Post	3in. Tube	Soil	Right	Steel	8/11/2014	Acceptable	43.864767	-116.469569
57	31	D3	W	Aluminum	Engineer Grade	Clear	Good	31	TWELFTH ST	6	32	8		0	4	10	TSJ	CRYSTAL CREEK DR	E 12TH ST	North	Single Post	2x2	Soil	Right	Steel	8/11/2014	Acceptable	43.864738	-116.469289
58	31	D3	W	Aluminum	Engineer Grade	Clear	Good	31	CRYSTAL CREEK DR	6	32	8		0	4	10	TSJ	CRYSTAL CREEK DR	E 12TH ST	North	Single Post	2x2	Soil	Right	Steel	8/11/2014	Acceptable	43.864738	-116.469289
59	32	D3	W	Aluminum	Engineer Grade	Clear	Good	32	PINYON PEAK DR	6	32	8		0	4	10	TSJ	CRYSTAL CREEK DR	PINYON PEAK DR	North	Single Post	2x2	Soil	Right	Steel	8/11/2014	Acceptable	43.865256	-116.469298
60	32	D3	W	Aluminum	Engineer Grade	Clear	Good	32	CRYSTAL CREEK DR	6	32	8		0	4	10	TSJ	CRYSTAL CREEK DR	PINYON PEAK DR	North	Single Post	2x2	Soil	Right	Steel	8/11/2014	Acceptable	43.865256	-116.469298
61	33	D3	W	Aluminum	Engineer Grade	Clear	Good	33	FELTHAM PEAK DR	6	32	10		0	4	8	TSJ	PINYON PEAK DR	FELTHAM PEAK DR	East	Single Post	2x2	Soil	Right	Steel	8/11/2014	Acceptable	43.865168	-116.468364
62	33	D3	N	Aluminum	Engineer Grade	Clear	Good	33	PINYON PEAK DR	6	32	10		0	4	8	TSJ	PINYON PEAK DR	FELTHAM PEAK DR	East	Single Post	2x2	Soil	Right	Steel	8/11/2014	Acceptable	43.865168	-116.468364
63	34	D3	W	Aluminum	Engineer Grade	Clear	Good	34	FELTHAM PEAK DR	6	32	10		0	4	8	TSJ	FELTHAM PEAK DR	FELTHAM PEAK DR	North	Single Post	2x2	Soil	Right	Steel	8/11/2014	Acceptable	43.866921	-116.468322
64	34	D3	W	Aluminum	Engineer Grade	Clear	Good	34	FELTHAM PEAK DR	6	32	10		0	4	8	TSJ	FELTHAM PEAK DR	FELTHAM PEAK DR	North	Single Post	2x2	Soil	Right	Steel	8/11/2014	Acceptable	43.866921	-116.468322
65	35	D3	W	Aluminum	Engineer Grade	Clear	Good	35	VANITY PEAK DR	6	32	8		0	4	8	TSJ	FELTHAM PEAK DR	VANITY PEAK DR	East	Single Post	2x2	Soil	Right	Steel	8/11/2014	Acceptable	43.866844	-116.471052
66	35	D3	N	Aluminum	Engineer Grade	Clear	Good	35	FELTHAM PEAK DR	6	32	8		0	4	8	TSJ	FELTHAM PEAK DR	VANITY PEAK DR	East	Single Post	2x2	Soil	Right	Steel	8/11/2014	Acceptable	43.866844	-116.471052
67	36	D3	N	Aluminum	Engineer Grade	Clear	Good	36	PINYON PEAK DR	6	32	9		0	4	6	TSJ	VANITY PEAK DR	PINYON PEAK DR	South	Single Post	2x2	Soil	Right	Steel	8/11/2014	Acceptable	43.865199	-116.471243
68	36	D3	E	Aluminum	Engineer Grade	Clear	Good	36	VANITY PEAK DR	6	32	9		0	4	6	TSJ	VANITY PEAK DR	PINYON PEAK DR	South	Single Post	2x2	Soil	Right	Steel	8/11/2014	Acceptable	43.865199	-116.471243
69	37	R7-13	E	Aluminum	Engineer Grade	Clear	Poor	37	NO PARKING THIS SIDE OF STREET	12	18	4		0	3	2	TSJ	CRYSTAL CREEK DR	CRYSTAL CRK LOOP 1106	North	Single Post	2in. Channel	Soil	Left	Steel	8/11/2014	Acceptable	43.866164	-116.469404
70	38	D3	W	Aluminum	Engineer Grade	Clear	Good	38	HWY 16	6	32	10		0	4	8	TSJ	SANDHOLLOW ROAD	HWY 16	South	Single Post	4x4	Soil	Right	Wood	8/12/2014	Acceptable	43.857606	-116.462577
71	38	D3	W	Aluminum	Engineer Grade	Clear	Good	38	SANDHOLLOW RD	6	32	10		0	4	8	TSJ	SANDHOLLOW ROAD	HWY 16	South	Single Post	4x4	Soil	Right	Wood	8/12/2014	Acceptable	43.857606	-116.462577
72	39	R1-1	N	Aluminum	Engineer Grade	Clear	Good	39	STOP	36	36	6		0	12	15	TSJ	SANDHOLLOW RD	HWY 16	South	Single Post	4x4	Soil	Right	Wood	8/12/2014	Acceptable	43.857601	-116.462559
73	40	R2-1-35	S	Aluminum	Engineer Grade	Clear	Good	40	SPEED LIMIT	24	30	10	35	10	4	4	TSJ	SANDHOLLOW RD	HWY 16	North	Single Post	4x4	Soil	Right	Wood	8/12/2014	Acceptable	43.858082	-116.46269
74	41	W42-8	S	Aluminum	Engineer Grade	Clear	Good	41	SLOW	41	41	7		0	8	6	TSJ	SANDHOLLOW RD	HWY 16	North	Single Post	4x4	Soil	Right	Wood	8/12/2014	Acceptable	43.858279	-116.462818
75	41	W13-1	S	Aluminum	Engineer Grade	Clear	Good	41	MPH	18	18	5	15	8	2	6	TSJ	SANDHOLLOW RD	HWY 16	North	Single Post	4x4	Soil	Right	Wood	8/12/2014	Acceptable	43.858279	-116.462818
76	41	W42-8	S	Aluminum	Engineer Grade	Clear	Good	41	FARM MACHINERY	18	24	4		0	5	6	TSJ	SANDHOLLOW RD	HWY 16	North	Single Post	4x4	Soil	Right	Wood	8/12/2014	Acceptable	43.858279	-116.462818
77	42	W5-2	S	Aluminum	Engineer Grade	Clear	Good	42	NARROW BRIDGE	41	41	6		0	5	4	TSJ	SANDHOLLOW RD	BRIDGE	North	Single Post	4x4	Soil	Right	Wood	8/12/2014	Acceptable	43.859709	-116.462817
78	43	OM-3R	S	Aluminum	Engineer Grade	Clear	Good	43		12	36	1		0	0	1	TSJ	SANDHOLLOW RD	BRIDGE	North	Single Post	Unknown	Soil	Left	Steel	8/12/2014	Acceptable	43.859964	-116.462905
79	44	OM-3L	S	Aluminum	Engineer Grade	Clear	Good	44		12	36	1		0	0	1	TSJ	SANDHOLLOW	BRIDGE	North	Single Post	4x4	Soil	Right	Wood	8/12/2014	Acceptable	43.860059	-116.462815

Sign ID	Support ID	MUTCD	Facing	Backing	Face Material	Visibility	Sign Condition	Photo No.	Sign Text	Length (in)	Width (in)	Height (in)	Num. Text	Num. Size (in)	Text Size (in)	Offset (ft)	Inspector	Road Name	Location Desc.	Travel Direction	Post Type	Post Size	Post Base	Post Pos.	Post Mat'l.	Date Insp.	Post Rating	Latitude	Longitude
80	45	OM-3R	N	Aluminum	Engineer Grade	Clear	Fair	45		12	36	1		0	0	1	TSJ	SANDHOLLOW RD	BRIDGE	SOUTH	Single Post	Unknown	Soil	Left	Steel	8/12/2014	Acceptable	43.860296	-116.462807
81	46	OM-3L	N	Aluminum	Engineer Grade	Clear	Missing	46		12	36	1		0	0	1	TSJ	SANDHOLLOW RD	BRIDGE	South	Single Post	4x4	Soil	Right	Wood	8/12/2014	Replace	43.860199	-116.462909
82	47	R2-1-35	S	Aluminum	Engineer Grade	Clear	Fair	47	SPEED LIMIT	24	30	6	35	10	4	5	TSJ	SANDHOLLOW	BRIDGE	North	Single Post	4x4	Soil	Right	Wood	8/12/2014	Acceptable	43.860725	-116.462802
83	48	W42-8	N	Aluminum	Engineer Grade	Clear	Fair	48	SLOW	41	41	6		0	8	5	TSJ	SANDHOLLOW RD	BRIDGE	South	Single Post	4x4	Soil	Right	Wood	8/12/2014	Acceptable	43.860887	-116.46288
84	50	R2-1-20	N	Aluminum	Engineer Grade	Clear	Good	50	SPEED LIMIT	18	24	7	20	8	3	5	TSJ	SANDHOLLOW RD	12TH STREET	North	Single Post	2x2	Soil	Right	Steel	8/12/2014	Acceptable	43.863552	-116.462794
85	51	OM-3L	N	Aluminum	Engineer Grade	Clear	Good	51		12	36	1		0	0	2	TSJ	SANDHOLLOW RD	12TH STREET	North	Single Post	3.5x6 I-beam	Soil	Right	Steel	8/12/2014	Acceptable	43.863594	-116.462795
86	52	OM-3R	N	Aluminum	Engineer Grade	Clear	Good	52		12	36	1		0	0	6	TSJ	SANDHOLLOW	12TH STREET	North	Single Post	3.5x6 I-beam	Soil	Left	Steel	8/12/2014	Acceptable	43.863676	-116.462901
87	53	OM-3L	N	Aluminum	Engineer Grade	Clear	Good	53		12	36	1		0	0	6	TSJ	SANDHOLLOW	12TH STREET	South	Single Post	3.5x6 I-beam	Soil	Right	Steel	8/12/2014	Acceptable	43.864024	-116.462893
88	54	OM-3R	E	Aluminum	Engineer Grade	Clear	Good	54		12	36	1		0	0	3	TSJ	SANDHOLLOW	12TH STREET	South	Single Post	3.5x6 I-beam	Soil	Left	Steel	8/12/2014	Acceptable	43.863952	-116.462782
89	55	W1-1L	N	Aluminum	Engineer Grade	Clear	Good	55		33	33	8		0	0	6	TSJ	SANDHOLLOW	12TH STREET	North	Single Post	2x2	Soil	Right	Steel	8/12/2014	Acceptable	43.864176	-116.462766
90	56	S1-1	E	Aluminum	Engineer Grade	Clear	Good	56		35	36	8		0	0	8	TSJ	12TH STREET	CRYSTAL CREEK DR	West	Single Post	2x2	Soil	Right	Steel	8/12/2014	Acceptable	43.86471	-116.47003
91	57	R2-1-35	W	Aluminum	Engineer Grade	Clear	Good	57	SPEED LIMIT	24	30	6	35	10	4	8	TSJ	12TH STREET	CRYSTAL CREEK DR	East	Single Post	4x4	Soil	Right	Wood	8/12/2014	Acceptable	43.864589	-116.471302
92	58	S5-1	W	Aluminum	Engineer Grade	Clear	Good	58	SCHOOL SPEED LIMIT WHEN FLASHING	24	48	8	20	0	0	9	TSJ	12TH STREET	CRYSTAL CREEK DR	West	Single Post	Unknown	Soil	Right	Steel	8/12/2014	Acceptable	43.864699	-116.471711
93	59	S5-2	W	Aluminum	Engineer Grade	Clear	Good	59		30	30	8		0	4	9	TSJ	12TH STREET	CRYSTAL CREEK DR	East	Single Post	4x4	Soil	Right	Steel	8/12/2014	Acceptable	43.864569	-116.471758
94	60	R16-X12	S	Aluminum	Engineer Grade	Clear	Good	60	EMMETT CITY LIMIT	24	30	9		0	6	5	TSJ	SUBSTATION	12TH STREET	North	Single Post	2x2	Soil	Right	Steel	8/12/2014	Acceptable	43.864395	-116.472755
95	60	R16-X12	S	Aluminum	Engineer Grade	Clear	Good	60	SPEED LIMIT, MPH, UNLESS OTHERWISE POSTED	30	30	7	20	4	4	5	TSJ	SUBSTATION	12TH STREET	North	Single Post	2x2	Soil	Right	Steel	8/12/2014	Acceptable	43.864395	-116.472755
96	61	S4-3	S	Aluminum	Engineer Grade	Clear	Fair	61		35	36	6		0	0	8	TSJ	SUBSTATION	12TH STREET	North	Single Post	4x4	Soil	Right	Wood	8/12/2014	Acceptable	43.864523	-116.472722
97	62	D3	E	Aluminum	Engineer Grade	Clear	Good	62	S. SUBSTATION RD	6	32	10		0	4	8	TSJ	SUBSTATION RD	12TH STREET	West	Single Post	2x2	Soil	Right	Steel	8/12/2014	Repair	43.864698	-116.472608
98	62	D3	E	Aluminum	Engineer Grade	Clear	Good	62	E. 12TH STREET	6	32	10		0	4	8	TSJ	SUBSTATION RD	12TH STREET	West	Single Post	2x2	Soil	Right	Steel	8/12/2014	Repair	43.864698	-116.472608
99	62	R1-1	E	Aluminum	Engineer Grade	Clear	Good	62	STOP	30	30	8		0	10	8	TSJ	SUBSTATION RD	12TH STREET	West	Single Post	2x2	Soil	Right	Steel	8/12/2014	Repair	43.864698	-116.472608
100	63	S2-1	E	Aluminum	Engineer Grade	Clear	Good	63		35	36	8		0	0	8	TSJ	12TH STREET	SUBSTATION	South	Single Post	2x2	Soil	Right	Steel	8/12/2014	Acceptable	43.864875	-116.472939
101	64	R16-X12	E	Aluminum	Engineer Grade	Clear	Good	64	EMMETT CITY LIMITS	18	24	7		0	4	20	TSJ	12TH STREET	SUBSTATION	West	Single Post	2x2	Soil	Right	Steel	8/12/2014	Acceptable	43.864736	-116.472985
102	65	R7-13	E	Aluminum	Engineer Grade	Clear	Good	65	NO PARKING THIS SIDE OF STREET	12	18	9		0	3	7	TSJ	SUBSTATION	12TH STREET	Easr	Single Post	4x4	Soil	Right	Wood	8/12/2014	Acceptable	43.864558	-116.473215
103	66	R7-13	E	Aluminum	Engineer Grade	Clear	Good	66	NO PARKING THIS SIDE OF STREET	12	18	9		0	3	7	TSJ	12TH STREET	SUBSTATION	East	Single Post	4x4	Soil	Right	Wood	8/12/2014	Acceptable	43.864563	-116.473756
104	67	R7-13	E	Aluminum	Engineer Grade	Clear	Good	67	NO PARKING THIS SIDE OF STREET	12	18	9		0	3	7	TSJ	12TH STREET	SUBSTATION	East	Single Post	4x4	Soil	Right	Wood	8/12/2014	Acceptable	43.864565	-116.474591
105	68	R1-1	E	Aluminum	Engineer Grade	Clear	Good	68	STOP	30	30	7		0	10	5	TSJ	12TH STREET	SUBSTATION	East	Single Post	4x4	Soil	Right	Wood	8/12/2014	Acceptable	43.864561	-116.472922
106	69	S1-1	E	Aluminum	Engineer Grade	Clear	Fair	69		35	36	8		0	0	5	TSJ	12TH STREET	SUBSTATION	East	Single Post	4x4	Soil	Right	Wood	8/12/2014	Acceptable	43.864564	-116.474974
107	70	S1-1	E	Aluminum	Engineer Grade	Clear	Fair	70		35	36	7		0	0	8	TSJ	12TH STREET	SUBSTATION	West	Single Post	4x4	Soil	Right	Wood	8/12/2014	Acceptable	43.864693	-116.475582
108	71	R7-13	E	Aluminum	Engineer Grade	Clear	Good	71	NO PARKING THIS SIDE OF STREET	12	18	8		0	3	5	TSJ	12TH STREET	SUBSTATION	East	Single Post	4x4	Soil	Right	Wood	8/12/2014	Acceptable	43.864568	-116.475729
109	72	R1-1	E	Aluminum	Engineer Grade	Clear	Good	72		30	30	12		0	0	8	TSJ	STONE DR	GEM STONE WAY	West	Single Post	2x2	Soil	Right	Steel	8/12/2014	Acceptable	43.867458	-116.477123
110	72	D3	E	Aluminum	Engineer Grade	Clear	Good	72	GEM STONE WAY	6	32	12		0	4	8	TSJ	STONE DR	GEM STONE WAY	West	Single Post	2x2	Soil	Right	Steel	8/12/2014	Acceptable	43.867458	-116.477123
111	72	D3	S	Aluminum	Engineer Grade	Clear	Good	72	STONE DR	6	32	12		0	4	8	TSJ	STONE DR	GEM STONE WAY	West	Single Post	2x2	Soil	Right	Steel	8/12/2014	Acceptable	43.867458	-116.477123
112	73	R7-1	S	Aluminum	Engineer Grade	Clear	Good	73	NO PARKING ANYTIME	12	18	7		0	3	7	TSJ	TENTH ST	CIRCLE	East	Single Post	2x2	Soil	Right	Steel	8/12/2014	Acceptable	43.866602	-116.476703
113	74	D3	E	Aluminum	Engineer Grade	Clear	Good	74	GEM STONE WAY	6	32	12		0	4	6	TSJ	TENTH ST	GEM STONE WAY	West	Single Post	2x2	Soil	Right	Steel	8/12/2014	Acceptable	43.866821	-116.477139
114	74	D3	E	Aluminum	Engineer Grade	Clear	Good	73	TENTH ST	6	32	9		0	4	8	TSJ	TENTH ST	GEM STONE WAY	West	Single Post	2x2	Soil	Right	Steel	8/12/2014	Acceptable	43.866821	-116.477139
115	49	W5-2	E	Aluminum	Engineer Grade	Clear	Fair	49	NARROW BRIDGE	41	41	8		0	5	5	TSJ	SANDHOLLOW RD	BRIDGE	South	Single Post	4x4	Soil	Right	Wood	8/12/2014	Acceptable	43.861823	-116.46291
116	75	R1-1	E	Aluminum	Engineer Grade	Clear	Fair	75		24	24	9		0	8	9	TSJ	GEM STONE WAY	TWELTH ST	South	Single Post	2x2	Soil	Right	Steel	8/12/2014	Acceptable	43.864745	-116.47632
117	75	D3	E	Aluminum	Engineer Grade	Partially Obscured	Fair	75	GEM STONE WAY	6	32	8		0	4	8	TSJ	GEM STONE WAY	TWELTH ST	South	Single Post	2x2	Soil	Right	Steel	8/12/2014	Acceptable	43.864745	-116.47632
118	75	D3	E	Aluminum	Engineer Grade	Partially Obscured	Fair	75		6	32	8		0	4	8	TSJ	GEM STONE WAY	TWELTH ST	South	Single Post	2x2	Soil	Right	Steel	8/12/2014	Acceptable	43.864745	-116.47632
119	76	S2-1	E	Aluminum	Engineer Grade	Clear	Fair	76		35	36	8		0	0	7	TSJ	TWELTH ST	XX	West	Single Post	4x4	Soil	Right	Steel	8/12/2014	Acceptable	43.864695	-116.477493
120	77	R16-X12	E	Aluminum	Engineer Grade	Clear	Good	77	MPH	24	30	8	35	0	0	8	TSJ	TWELTH ST	XX	West	Single Post	2x2	Concrete	Right	Steel	8/12/2014	Acceptable	43.864686	-116.477654
121	77	S5-2	E	Aluminum	Engineer Grade	Clear	Good	77		24	30	8		0	0	8	TSJ	TWELTH ST	XX	West	Single Post	2x2	Concrete	Right	Steel	8/12/2014	Acceptable	43.864686	-116.477654
122	78	R16-X12	E	Aluminum	Engineer Grade	Clear	Good	78	EMMETT CITY LIMIT	24	30	8		0	0	8	TSJ	TWELTH ST	GEM STONE WAY	East	Single Post	2x2	Soil	Right	Steel	8/12/2014	Acceptable	43.864567	-116.478122
123	78	R16-X12	E	Aluminum	Engineer Grade	Clear	Good	78	SPEED LIMIT MPH UNLESS OTHERWISE POSTED	30	30	8	20	12	4	8	TSJ	TWELTH ST	GEM STONE WAY	East	Single Post	2x2	Soil	Right	Steel	8/12/2014	Acceptable	43.864567	-116.478122
124	79	S5-1	W	Aluminum	Engineer Grade	Clear	Good	79	SCHOOL SPEED LIMIT WHEN FLASHING	24	48	8	20	0	0	8	TSJ	TWELTH ST	GEM STONE WAY	East	Single Post	Unknown	Concrete	Right	Steel	8/12/2014	Acceptable	43.864567	-116.477816
125	80	S2-1	E	Aluminum	Engineer Grade	Clear	Good	80		35	36	7		0	0	8	TSJ	TWELTH ST	GEM STONE	East	Single Post	4x4	Soil	Right	Wood	8/12/2014	Acceptable	43.864572	-116.477591
126	81	R16-X12	W	Aluminum	Engineer Grade	Clear	Fair	81	EMMETT CITY LIMITS	30	30	8		0	0	8	TSJ	SUBSTATION	4TH ST	South	Single Post	2x2	Soil	Right	Steel	8/12/2014	Acceptable	43.872409	-116.472899
127	81	R16-X12	N	Aluminum	Engineer Grade	Clear	Fair	81	SPEED LIMIT UNLESS OTHERWISE POSTED	30	30	8	20	0	0	8	TSJ	SUBSTATION	4TH ST	South	Single Post	2x2	Soil	Right	Steel	8/12/2014	Acceptable	43.872409	-116.472899
128	82	R2-1-35	N	Aluminum	Engineer Grade	Clear	Poor	82	SPEED LIMIT	24	30	7	35	10	4	7	TSJ	SUBSTATION	E. 4TH ST	North	Single Post	4x4	Soil	Right	Wood	8/12/2014	Acceptable	43.872393	-116.47275
129	83	R1-1	E	Aluminum	Engineer Grade	Clear	Good	83		30	30	10		0	12	3	TSJ	SUBSTATION	4TH ST	East	Single Post	2x2	Soil	Right	Steel	8/12/2014	Acceptable	43.87182	-116.472931
130	83	D3	E	Aluminum	Engineer Grade	Clear	Good	83	S. SUBSTATION RD	6	32	10		0	4	3	TSJ	SUBSTATION	4TH ST	East	Single Post	2x2	Soil	Right	Steel	8/12/2014	Acceptable	43.87182	-116.472931
131	83	D3	E	Aluminum	Engineer Grade	Clear	Good	83	4TH ST	6	32	10		0	4	3	TSJ	SUBSTATION	4TH ST	East	Single Post	2x2	Soil	Right	Steel	8/12/2014	Acceptable	43.87182	-116.472931
132	84	R2-1-35	E	Aluminum	Engineer Grade	Clear	Fair	84	SPEED LIMIT	24	30	10	35	10	4	3	TSJ	SUBSTATION	4TH ST	South	Single Post	2x2	Soil	Right	Steel	8/12/2014	Acceptable	43.871217	-116.472888
133	85	S1-1	E	Aluminum	Engineer Grade	Clear	Good	85		35	36	7		0	0	7	TSJ	SUBSTATION	4TH ST	South	Single Post	2x2	Soil	Right	Steel	8/12/2014	Acceptable	43.871061	-116.472887
134	86	S2-1	E	Aluminum	Engineer Grade	Clear	Good	86		35	36	10		0	0	8	TSJ	SUBSTATION	QUEEN ANNE DR	South	Single Post	2x2	Soil	Right	Steel	8/12/2014	Acceptable	43.869962	-116.472884
135	86	S2-P2	E	Aluminum	Engineer Grade	Clear	Good	86		12	24	10		0	0	8	TSJ	SUBSTATION	QUEEN ANNE DR	South	Single Post	2x2	Soil	Right	Steel	8/12/2014	Acceptable	43.869962	-116.472884
136	86	S4-2	E	Aluminum	Engineer Grade	Clear	Good	86		10	24	10		0	0	8	TSJ	SUBSTATION	QUEEN ANNE DR	South	Single Post	2x2	Soil	Right	Steel	8/12/2014	Acceptable	43.869962	-116.472884
137	87	OM-3R	E	Aluminum	Engineer Grade	Clear	Good	87		12	36	1		0	0	1	TSJ	SUBSTATION	QUEEN ANNE DR	South	Single Post	Unknown	Soil	Left	Steel	8/12/2014	Acceptable	43.870011	-116.47276
138	88	OM-3L	E	Aluminum	Engineer Grade	Clear	Fair	88		12	36	1		0	0	1	TSJ	SUBSTATION	QUEEN ANNE DR	South	Single Post	2x2	Soil	Right	Steel	8/12/2014	Acceptable	43.86988	-116.472864
139	89	OM-3R	E	Aluminum	Engineer Grade	Clear	Fair	89		12	36	1		0	0	1	TSJ	SUBSTATION	QUEEN ANNE DR	North	Single Post	2x2	Soil	Left	Steel	8/12/2014	Acceptable	43.869786	-116.472858
140	90	OM-3L	E	Aluminum	Engineer Grade	Clear	Good	90		12	36	1		0	0	1	TSJ	SUBSTATION	QUEEN ANNE DR	North	Single Post	2x2	Soil	Right	Steel	8/12/2014	Acceptable	43.869907	-116.472766
141	91	S2-1	S	Aluminum	Engineer Grade	Clear	Good	91		35	36	10		0	0	1	TSJ	SUBSTATION	QUEEN ANNE DR	North	Single Post	2x2	Soil	Right	Steel	8/12/2014	Acceptable	43.869802	-116.472757
142	91	S2-P2	E	Aluminum	Engineer Grade	Clear	Good	91		12	36	10		0	0	1	TSJ	SUBSTATION	QUEEN ANNE DR	North	Single Post	2x2	Soil	Right	Steel	8/12/2014	Acceptable	43.869802	-116.472757
143	91	S4-2	E	Aluminum	Engineer Grade	Clear	Good	91		10	24	10		0	0	1	TSJ	SUBSTATION	QUEEN ANNE DR	North	Single Post	2x2	Soil	Right	Steel	8/12/2014	Acceptable	43.869802	-116.472757
144	92	S1-1	S	Aluminum	Engineer Grade	Clear	Good	92		35	36	7		0	0	7	TSJ	SUBSTATION	QEEN ANNE DR	South	Single Post	2x2	Soil	Right	Steel	8/12/2014	Acceptable	43.869345	-116.472894
145	93	D3	S	Aluminum	Engineer Grade	Tree Obscured	Good	93	QUEEN ANNE DRIVE	6	32	10		0	4	10	TSJ	SUBSTATION	QUEEN ANNE DR	West	Single Post	2x2	Soil	Right	Steel	8/12/2014	Acceptable	43.869141	-116.472655
146	93	D3	S	Aluminum	Engineer Grade	Tree Obscured	Good	93	S. SUBSTATION RD	6	32	10		0	4	10	TSJ	SUBSTATION	QUEEN ANNE DR	West	Single Post	2x2	Soil	Right	Steel	8/12/2014	Acceptable	43.869141	-116.472655
147	93	R1-1	S	Aluminum	Engineer Grade	Tree Obscured	Good	93		30	30	10		0	0	10	TSJ	SUBSTATION	QUEEN ANNE DR	West	Single Post	2x2	Soil	Right	Steel	8/12/2014	Acceptable	43.869141	-116.472655
148	94	S1-1	S	Aluminum	Engineer Grade	Clear	Good	94		35	36	7		0	0	7	TSJ	SUBSTATION	QUEEN ANNE DR	North	Single Post	2x2	Soil	Right	Steel	8/12/2014	Acceptable	43.868658	-116.472672
149	95	D3	S	Aluminum	Engineer Grade	Clear	Good	95	QUAIL RUN RD	6	32	10		0	4	2	TSJ	SUBSTATION	QUAIL RUN RD	West	Single Post	2x2	Soil	Right	Steel	8/12/2014	Acceptable	43.868318	-116.472642
150	95	D3	S	Aluminum	Engineer Grade	Clear	Good	95	SUBSTATION	6	32	10		0	4	2	TSJ	SUBSTATION	QUAIL RUN RD	West	Single Post	2x2	Soil	Right	Steel	8/12/2014	Acceptable	43.868318	-116.472642
151	95	R1-1	S	Aluminum	Engineer Grade	Clear	Good	95		30	30	10		0	0	2	TSJ	SUBSTATION	QUAIL RUN RD	West	Single Post	2x2	Soil	Right	Steel	8/12/2014	Acceptable	43.868318	-116.472642
152	96	W1-7	S	Aluminum	Engineer Grade	Clear	Replace	96		24	48	6		0	0	7	TSJ	SUBSTATION	QUEEN ANNE RD	East	Single Post	4x4	Soil	Right	Wood	8/12/2014	Repair	43.868238	-116.472885
153	97	S5-1	S	Aluminum	Engineer Grade	Clear	Good	97	SCHOOL SPEED LIMIT WHEN FLASHING	24	48	8	20	0	0	7	TSJ	SUBSTATION	QUAIL RUN RD	South	Single Post	Unknown	Concrete	Right	Steel	8/12/2014	Acceptable	43.867967	-116.472945

Sign ID	Support ID	MUTCD	Facing	Backing	Face Material	Visibility	Sign Condition	Photo No.	Sign Text	Length (in)	Width (in)	Height (in)	Num. Text	Num. Size (in)	Text Size (in)	Offset (ft)	Inspector	Road Name	Location Desc.	Travel Direction	Post Type	Post Size	Post Base	Post Pos.	Post Mat'l.	Date Insp.	Post Rating	Latitude	Longitude
154	98	R16-X12	S	Aluminum	Engineer Grade	Clear	Good	98	MPH	24	30	10	35	0	0	7	TSJ	SUBSTATION	QUAIL RUN RD	North	Single Post	2x2	Concrete	Right	Steel	8/12/2014	Acceptable	43.868007	-116.472657
155	98	S5-2	S	Aluminum	Engineer Grade	Clear	Good	98		24	30	10		0	0	8	TSJ	SUBSTATION	QUAIL RUN RD	North	Single Post	2x2	Concrete	Right	Steel	8/12/2014	Acceptable	43.868007	-116.472657
156	99	D3	S	Aluminum	Engineer Grade	Clear	Good	99	S. SUBSTATION RD	6	32	10		0	4	5	TSJ	SUBSTATION	FELTHAM PEAK DR	West	Single Post	2x2	Concrete	Right	Steel	8/12/2014	Acceptable	43.867211	-116.472593
157	99	D3	S	Aluminum	Engineer Grade	Clear	Good	99	FELTHAM PEAK DR	6	32	10		0	4	5	TSJ	SUBSTATION	FELTHAM PEAK DR	West	Single Post	2x2	Concrete	Right	Steel	8/12/2014	Acceptable	43.867211	-116.472593
158	99	R1-1	S	Aluminum	Engineer Grade	Clear	Good	99		30	30	10		0	0	5	TSJ	SUBSTATION	FELTHAM PEAK DR	West	Single Post	2x2	Concrete	Right	Steel	8/12/2014	Acceptable	43.867211	-116.472593
159	100	S2-1	S	Aluminum	Engineer Grade	Clear	Good	100		35	36	10		0	0	7	TSJ	S. SUBSTATION RD	FELTHAM PEAK DR	North	Single Post	2x2	Soil	Right	Steel	8/12/2014	Acceptable	43.867015	-116.472663
160	100	S4-2	S	Aluminum	Engineer Grade	Clear	Good	100		10	24	10		0	0	7	TSJ	S. SUBSTATION RD	FELTHAM PEAK DR	North	Single Post	2x2	Soil	Right	Steel	8/12/2014	Acceptable	43.867015	-116.472663
161	100	S2-P2	S	Aluminum	Engineer Grade	Clear	Good	100		12	24	10		0	0	7	TSJ	S. SUBSTATION RD	FELTHAM PEAK DR	North	Single Post	2x2	Soil	Right	Steel	8/12/2014	Acceptable	43.867015	-116.472663
162	101	S2-1	S	Aluminum	Engineer Grade	Clear	Good	101		35	36	10		0	0	15	TSJ	S. SUBSTATION RD	FELTHAM PEAK RD	South	Single Post	2x2	Soil	Right	Steel	8/12/2014	Acceptable	43.867023	-116.472975
163	101	S2-P2	S	Aluminum	Engineer Grade	Clear	Good	101		12	24	10		0	0	15	TSJ	S. SUBSTATION RD	FELTHAM PEAK RD	South	Single Post	2x2	Soil	Right	Steel	8/12/2014	Acceptable	43.867023	-116.472975
164	101	S4-2	S	Aluminum	Engineer Grade	Clear	Good	101		10	24	10		0	0	15	TSJ	S. SUBSTATION RD	FELTHAM PEAK RD	South	Single Post	2x2	Soil	Right	Steel	8/12/2014	Acceptable	43.867023	-116.472975
165	102	R1-1	S	Aluminum	Engineer Grade	Clear	Good	102		30	30	10		0	10	8	TSJ	S. SUBSTATION RD	FELTHAM PEAK RD	East	Single Post	2x2	Soil	Right	Steel	8/12/2014	Acceptable	43.867067	-116.473028
166	102	D3	S	Aluminum	Engineer Grade	Clear	Good	102	S. SUBSTATION RD	6	32	10		0	4	8	TSJ	S. SUBSTATION RD	FELTHAM PEAK RD	East	Single Post	2x2	Soil	Right	Steel	8/12/2014	Acceptable	43.867067	-116.473028
167	102	D3	S	Aluminum	Engineer Grade	Clear	Good	102	FELTHAM PEAK RD	6	32	10		0	4	8	TSJ	S. SUBSTATION RD	FELTHAM PEAK RD	East	Single Post	2x2	Soil	Right	Steel	8/12/2014	Acceptable	43.867067	-116.473028
168	103	R1-1	E	Aluminum	Engineer Grade	Clear	Good	103		30	30	10		0	0	8	TSJ	FELTHAM PEAK DR	S. PROSPECT WAY	West	Single Post	2x2	Soil	Right	Steel	8/12/2014	Acceptable	43.867213	-116.474002
169	103	D3	E	Aluminum	Engineer Grade	Clear	Good	103	S. PROSPECT WAY	6	32	10		0	4	8	TSJ	FELTHAM PEAK DR	S. PROSPECT WAY	West	Single Post	2x2	Soil	Right	Steel	8/12/2014	Acceptable	43.867213	-116.474002
170	103	D3	S	Aluminum	Engineer Grade	Clear	Good	103	FELTHAM PEAK DR	6	32	10		0	4	8	TSJ	FELTHAM PEAK DR	S. PROSPECT WAY	West	Single Post	2x2	Soil	Right	Steel	8/12/2014	Acceptable	43.867213	-116.474002
171	104	D3	S	Aluminum	Engineer Grade	Clear	Good	104	E. MARSH CREEK	6	32	10		0	4	10	TSJ	S. BEAVER CREEK WAY	E. MARSH CREEK RD	South	Single Post	2x2	Soil	Right	Steel	8/12/2014	Acceptable	43.866676	-116.475417
172	104	D3	S	Aluminum	Engineer Grade	Clear	Good	104	S. BEAVER CREEK WAY	6	32	10		0	4	10	TSJ	S. BEAVER CREEK WAY	E. MARSH CREEK RD	South	Single Post	2x2	Soil	Right	Steel	8/12/2014	Acceptable	43.866676	-116.475417
173	104	R1-1	S	Aluminum	Engineer Grade	Clear	Good	104		30	30	10		0	0	10	TSJ	S. BEAVER CREEK WAY	E. MARSH CREEK RD	South	Single Post	2x2	Soil	Right	Steel	8/12/2014	Acceptable	43.866676	-116.475417
174	105	R7-100	S	Aluminum	Engineer Grade	Clear	Good	105	NO PARKING THIS SIDE OF STREET	12	18	7		0	3	8	TSJ	S. BEAVER CREEK WAY	E. MARSH CREEK WAY	West	Single Post	2x2	Soil	Right	Steel	8/12/2014	Acceptable	43.866541	-116.47578
175	106	R16-X12	S	Aluminum	Engineer Grade	Clear	Good	106	EMMETT CITY LIMIT	24	30	10		0	0	4	TSJ	12TH ST	MOFFATT AVE	West	Single Post	2x2	Soil	Right	Steel	8/12/2014	Acceptable	43.86466	-116.486978
176	106	R2-1-35	S	Aluminum	Engineer Grade	Clear	Good	106	SPEED LIMIT	24	30	10	35	10	4	4	TSJ	12TH ST	MOFFATT AVE	West	Single Post	2x2	Soil	Right	Steel	8/12/2014	Acceptable	43.86466	-116.486978
177	106	R16-X12	S	Aluminum	Engineer Grade	Clear	Good	106	SPPED LIMIT MPH UNLESS OTHERWISE POSTED	30	30	10	20	0	0	4	TSJ	12TH ST	MOFFATT AVE	West	Single Post	2x2	Soil	Right	Steel	8/12/2014	Acceptable	43.86466	-116.486978
178	107	W1-1L	S	Aluminum	Engineer Grade	Clear	Good	107		41	41	7		0	0	7	TSJ	S MOFFATT AVE	7TH ST	North	Single Post	4x4	Soil	Right	Wood	8/12/2014	Acceptable	43.868213	-116.487713
179	107	W13-1	S	Aluminum	Engineer Grade	Clear	Excellent	107		18	18	7		0	0	7	TSJ	S MOFFATT AVE	7TH ST	North	Single Post	4x4	Soil	Right	Wood	8/12/2014	Acceptable	43.868213	-116.487713
180	108	R2-1-25	S	Aluminum	Engineer Grade	Clear	Good	108		12	24	8		0	0	6	TSJ	S MOFFATT AVE	12TH ST	South	Single Post	2x2	Soil	Right	Steel	8/12/2014	Acceptable	43.865119	-116.487646
181	109	D3	S	Aluminum	Engineer Grade	Clear	Good	109	MOFFETT AVE	6	32	10		0	4	7	TSJ	S MOFFATT AVE	12TH ST	South	Single Post	2x2	Soil	Right	Steel	8/12/2014	Acceptable	43.864702	-116.487747
182	109	D3	S	Aluminum	Engineer Grade	Clear	Good	109	E. 12TH ST	6	32	10		0	4	7	TSJ	S MOFFATT AVE	12TH ST	South	Single Post	2x2	Soil	Right	Steel	8/12/2014	Acceptable	43.864702	-116.487747
183	109	R1-1	S	Aluminum	Engineer Grade	Clear	Good	109		30	30	10		0	0	7	TSJ	S MOFFATT AVE	12TH ST	South	Single Post	2x2	Soil	Right	Steel	8/12/2014	Acceptable	43.864702	-116.487747
184	110	R1-1	E	Aluminum	Engineer Grade	Clear	Poor	110		30	30	8		0	0	5	TSJ	S. AMERICAN AVE	E. 12TH ST	North	Single Post	2x2	Soil	Right	Steel	8/12/2014	Acceptable	43.864529	-116.488051
185	110	D3	E	Aluminum	Engineer Grade	Clear	Good	110	S. AMERICAN AVE	6	32	8		0	4	5	TSJ	S. AMERICAN AVE	E. 12TH ST	North	Single Post	2x2	Soil	Right	Steel	8/12/2014	Acceptable	43.864529	-116.488051
186	110	D3	S	Aluminum	Engineer Grade	Clear	Good	110	A. AMERICAN AVE	6	32	8		0	4	5	TSJ	S. AMERICAN AVE	E. 12TH ST	North	Single Post	2x2	Soil	Right	Steel	8/12/2014	Acceptable	43.864529	-116.488051
187	111	D3	S	Aluminum	Engineer Grade	Clear	Good	111	AMERICAN AVE	6	32	7		0	4	15	TSJ	S. AMERICAN AVE	FREEDOM ST	South	Single Post	2x2	Soil	Right	Steel	8/13/2014	Acceptable	43.863616	-116.488256
188	111	D3	S	Aluminum	Engineer Grade	Clear	Good	111	FREEDOM ST	6	32	7		0	4	15	TSJ	S. AMERICAN AVE	FREEDOM ST	South	Single Post	2x2	Soil	Right	Steel	8/13/2014	Acceptable	43.863616	-116.488256
189	112	D3	E	Aluminum	Engineer Grade	Clear	Good	112	AMERICAN AVE	6	32	7		0	4	15	TSJ	AMERICAN AVE	LIBERTY ST	South	Single Post	3in. Tube	Soil	Right	Steel	8/13/2014	Repair	43.863004	-116.488246
190	112	D3	S	Aluminum	Engineer Grade	Clear	Good	112	LIBERTY ST	6	32	7		0	4	15	TSJ	AMERICAN AVE	LIBERTY ST	South	Single Post	3in. Tube	Soil	Right	Steel	8/13/2014	Repair	43.863004	-116.488246
191	113	D3	E	Aluminum	Engineer Grade	Clear	Good	113	E. 12TH ST	6	32	10		0	4	10	TSJ	S. CONSTITUTION LN	E. 12TH ST	North	Single Post	2x2	Concrete	Right	Steel	8/13/2014	Acceptable	43.864519	-116.490432
192	113	D3	E	Aluminum	Engineer Grade	Clear	Good	113	S. CONSTITUTION LN	6	32	10		0	4	10	TSJ	S. CONSTITUTION LN	E. 12TH ST	North	Single Post	2x2	Concrete	Right	Steel	8/13/2014	Acceptable	43.864519	-116.490432
193	113	R1-1	E	Aluminum	Engineer Grade	Clear	Good	113		30	30	10		0	0	10	TSJ	S. CONSTITUTION LN	E. 12TH ST	North	Single Post	2x2	Concrete	Right	Steel	8/13/2014	Acceptable	43.864519	-116.490432
194	114	R2-1-15	E	Aluminum	Engineer Grade	Clear	Good	114		12	18	4		0	0	2	TSJ	AMERICAN AVE	E. 12 ST	South	Single Post	2x2	Soil	Right	Steel	8/13/2014	Acceptable	43.864515	-116.490592
195	115	R1-1	E	Aluminum	Engineer Grade	Clear	Good	115		24	24	5		0	0	8	TSJ	AMERICAN AVE	S. JOHNS AVE	West	Single Post	3in. Tube	Soil	Right	Steel	8/13/2014	Acceptable	43.864261	-116.492619
196	116	R2-1-15	E	Aluminum	Engineer Grade	Clear	Good	116		12	18	4		5	2.5	6	TSJ	AMERICAN AVE	S. JOHNS AVE	East	Single Post	2x2	Soil	Right	Steel	8/13/2014	Acceptable	43.864125	-116.492568
197	117	R1-1	E	Aluminum	Engineer Grade	Clear	Good	117		24	24	6		0	0	6	TSJ	LIBERTY LANE	S. JOHNS AVE	West	Single Post	3in. Tube	Soil	Right	Steel	8/13/2014	Acceptable	43.862992	-116.492612
198	118	R2-1-15	E	Aluminum	Engineer Grade	Clear	Good	118		6	32	5		0	4	5	TSJ	AMERICAN AVE	S. JOHNS AVE	East	Single Post	3in. Tube	Soil	median	Steel	8/13/2014	Acceptable	43.862926	-116.492463
199	119	R2-1-35	E	Aluminum	Engineer Grade	Clear	Good	119	SPEED LIMIT	24	30	7	35	10	4	8	TSJ	E 12TH ST	CONSTITUTION AVE	East	Single Post	2x2	Soil	Right	Steel	8/13/2014	Acceptable	43.864548	-116.490282
200	120	D3	E	Aluminum	Engineer Grade	Partially Obscured	Good	120	S. JOHN'S AVE	6	32	10		0	4	8	TSJ	12TH ST	S. JOHN'S AVE	West	Single Post	2x2	Soil	Right	Steel	8/13/2014	Acceptable	43.864699	-116.492571
201	120	D3	E	Aluminum	Engineer Grade	Partially Obscured	Good	120	E. 12TH ST	6	32	10		0	4	8	TSJ	12TH ST	S. JOHN'S AVE	West	Single Post	2x2	Soil	Right	Steel	8/13/2014	Acceptable	43.864699	-116.492571
202	120	R1-1	E	Aluminum	Engineer Grade	Partially Obscured	Good	120		24	24	10		0	0	8	TSJ	12TH ST	S. JOHN'S AVE	West	Single Post	2x2	Soil	Right	Steel	8/13/2014	Acceptable	43.864699	-116.492571
203	121	R1-1	E	Aluminum	Engineer Grade	Clear	Good	121		24	24	10		0	0	3	TSJ	12TH ST	S JOHN'S ST	East	Single Post	2x2	Soil	Right	Steel	8/13/2014	Acceptable	43.864503	-116.492882
204	121	D3	E	Aluminum	Engineer Grade	Clear	Good	121	S. JOHN'S ST	6	32	10		0	4	3	TSJ	12TH ST	S JOHN'S ST	East	Single Post	2x2	Soil	Right	Steel	8/13/2014	Acceptable	43.864503	-116.492882
205	121	D3	E	Aluminum	Engineer Grade	Clear	Good	121	E. 12TH ST	6	32	10		0	4	3	TSJ	12TH ST	S JOHN'S ST	East	Single Post	2x2	Soil	Right	Steel	8/13/2014	Acceptable	43.864503	-116.492882
206	122	R1-1	E	Aluminum	Engineer Grade	Clear	Good	122		24	24	10		0	0	5	TSJ	JUDO LN	E. 12TH ST	North	Single Post	2x2	Concrete	Right	Steel	8/13/2014	Acceptable	43.864445	-116.495148
207	122	D3	E	Aluminum	Engineer Grade	Clear	Good	122	JUDO LN	6	32	10		0	4	5	TSJ	JUDO LN	E. 12TH ST	North	Single Post	2x2	Concrete	Right	Steel	8/13/2014	Acceptable	43.864445	-116.495148
208	122	D3	S	Aluminum	Engineer Grade	Clear	Good	122	E. 12TH ST	6	32	10		0	4	5	TSJ	JUDO LN	E. 12TH ST	North	Single Post	2x2	Concrete	Right	Steel	8/13/2014	Acceptable	43.864445	-116.495148
209	123	W3-1A	N	Aluminum	Engineer Grade	Partially Obscured	Good	123		49	49	5		0	0	10	TSJ	JUDO LN	HWY 16	South	Single Post	4x4	Soil	Right	Steel	8/13/2014	Acceptable	43.861919	-116.495315
210	124	R1-1	N	Aluminum	Engineer Grade	Clear	Good	124		24	24	6		0	0	10	TSJ	E. 12TH ST	HWY 16	South	Single Post	2x2	Soil	Right	Steel	8/13/2014	Acceptable	43.861298	-116.495326
211	125	D3	W	Aluminum	Engineer Grade	Clear	Good	125	HWY 16	6	32	10		0	4	5	TSJ	JUDO LN	HWY 16	South	Single Post	3.5x6 I-beam	Soil	Right	Steel	8/13/2014	Acceptable	43.861315	-116.495341
212	125	D3	W	Aluminum	Engineer Grade	Clear	Good	125	JUDE LN	6	32	10		0	4	5	TSJ	JUDO LN	HWY 16	South	Single Post	3.5x6 I-beam	Soil	Right	Steel	8/13/2014	Acceptable	43.861315	-116.495341
213	126	R2-1-25	W	Aluminum	Engineer Grade	Clear	Fair	126		24	30	8		0	0	5	TSJ	JUDO LN	HWY 16	North	Single Post	2x2	Soil	Right	Steel	8/13/2014	Acceptable	43.861398	-116.495195
214	126	R16-X12	W	Aluminum	Engineer Grade	Clear	Good	126	SPEED LIMIT UNLESS OTHERWISE POSTED	30	30	8	20	0	0	5	TSJ	JUDO LN	HWY 16	North	Single Post	2x2	Soil	Right	Steel	8/13/2014	Acceptable	43.861398	-116.495195
215	127	R16-X12	W	Aluminum	Engineer Grade	Clear	Good	126	CITY OF EMMETT RV DUMP SITE	24	24	7		0	2.5	2	TSJ	E 12TH ST	S HAYES AVE	West	Single Post	2x2	Soil	Right	Steel	8/13/2014	Acceptable	43.864664	-116.498397
216	128	R16-X12	E	Aluminum	Engineer Grade	Clear	Good	128	LANE AHEAD	24	30	8		0	0	5	TSJ	E. 12TH ST	S. HAYES ST	South-West	Single Post	2x2	Soil	Right	Steel	8/13/2014	Acceptable	43.864651	-116.499006
217	129	OM-3L	E	Aluminum	Engineer Grade	Clear	Replace	129		12	36	1		0	0	1	TSJ	E. 12TH ST	S. HAYES ST	West	Single Post	2x2	Soil	Right	Steel	8/13/2014	Acceptable	43.864651	-116.499253
218	130	OM-3L	E	Aluminum	Engineer Grade	Clear	Replace	130		12	36	1		0	0	3	TSJ	E. 12TH ST	S.. HAYES ST	West	Single Post	2x2	Soil	Right	Steel	8/13/2014	Acceptable	43.864665	-116.499282
219	131	R16-X12	E	Aluminum	Engineer Grade	Clear	Good	131	CITY OF EMMETT RV DUMP SIT	24	24	9		0	0	6	TSJ	E. 12TH ST	S. WASHINGTON AVE	East	Single Post	2x2	Soil	Right	Steel	8/13/2014	Acceptable	43.864565	-116.499135
220	131	R2-1-35	E	Aluminum	Engineer Grade	Clear	Poor	131	SPEED LIMIT	24	30	9	35	10	4	6	TSJ	E. 12TH ST	S. WASHINGTON AVE	East	Single Post	2x2	Soil	Right	Steel	8/13/2014	Acceptable	43.864565	-116.499135
221	132	R1-1	E	Aluminum	Engineer Grade	Clear	Good	132		30	30	7		0	0	8	TSJ	E. 12TH ST	S WASHINGTON AVE	West	Single Post	2x2	Soil	Right	Steel	8/13/2014	Acceptable	43.864679	-116.49981
222	132	D3	E	Aluminum	Engineer Grade	Clear	Good	132	S WASHINGTON AVE	6	32	7		0	4	8	TSJ	E. 12TH ST	S WASHINGTON AVE	West	Single Post	2x2	Soil	Right	Steel	8/13/2014	Acceptable	43.864679	-116.49981
223	132	D3	N	Aluminum	Engineer Grade	Clear	Good	132	E 12TH ST	6	32	7		0	4	8	TSJ	E. 12TH ST	S WASHINGTON AVE	West	Single Post	2x2	Soil	Right	Steel	8/13/2014	Acceptable	43.864679	-116.49981
224	133	OM-3L	N	Aluminum	Engineer Grade	Clear	Good	133		12	36	1		0	0	4	TSJ	E. 12TH ST	S. WASHINGTON ST	East	Single Post	2x2	Soil	Right	Steel	8/13/2014	Acceptable	43.864556	-116.499827
225	134	OM-3R	N	Aluminum	Engineer Grade	Clear	Fair	134		12	36	1		0	0	4	TSJ	E. 12TH ST	S WASHINGTON AVE	West	Single Post	2x2	Soil	Left	Steel	8/13/2014	Acceptable	43.864559	-116.499761
226	135	R16-X12	N	Aluminum	Engineer Grade	Clear	Good	135	BEGIN	6	24	8		0	0	5	TSJ	E. 12TH ST	S WASHINGTON ST	West	Single Post	2x2	Soil	Right	Steel	8/13/2014	Acceptable	43.86468	-116.500178
227	135	R16-X12	N	Aluminum	Engineer Grade	Clear	Good	135	BIKE ROUTE	18	24	8		0	0	5	TSJ	E. 12TH ST	S WASHINGTON ST	West	Single Post	2x2	Soil	Right	Steel	8/13/2014	Acceptable	43.86468	-116.500178
228	136	R16-X12	N	Aluminum	Engineer Grade	Clear	Good	136	DO NOT BLOCK DRIVEWAY	18	24	8		0	0	4	TSJ	E. 12TH ST	S WASHINGTON ST	West	Single Post	2x2	Concrete	Right	Steel	8/13/2014	Acceptable	43.864669	-116.500331
229	137	R16-X12	N	Aluminum	Engineer Grade	Clear	Good	137	END	6	24	8		0	0	6	TSJ	E. 12TH ST	S. WASHINGTON ST	East	Single Post	2x2	Concrete	Right	Steel	8/13/2014	Acceptable	43.864572	-116.500261
230	137	R16-X12	N	Aluminum	Engineer Grade	Clear	Good	137	BIKE ROUTE	18	24	8		0	0	6	TSJ	E. 12TH ST	S. WASHINGTON ST	East	Single Post	2x2	Concrete	Right	Steel	8/13/2014	Acceptable	43.864572	-116.500261
231	138	R1-1	N	Aluminum	Engineer Grade	Clear	Good	138		24	24	8		0	0	5	TSJ	E. 12TH ST	S WASHINGTON	East	Single Post	2x2	Concrete	Right	Steel	8/13/2014	Acceptable	43.864548	-116.500167

Sign ID	Support ID	MUTCD	Facing	Backing	Face Material	Visibility	Sign Condition	Photo No.	Sign Text	Length (in)	Width (in)	Height (in)	Num. Text	Num. Size (in)	Text Size (in)	Offset (ft)	Inspector	Road Name	Location Desc.	Travel Direction	Post Type	Post Size	Post Base	Post Pos.	Post Mat'l.	Date Insp.	Post Rating	Latitude	Longitude
232	138	D3	E	Aluminum	Engineer Grade	Clear	Good	138	S WASHINGTON ST	6	32	8		0	4	5	TSJ	E. 12TH ST	S WASHINGTON	East	Single Post	2x2	Concrete	Right	Steel	8/13/2014	Acceptable	43.864548	-116.500167
233	138	D3	S	Aluminum	Engineer Grade	Clear	Good	138	E. 12TH S	6	32	8		0	4	5	TSJ	E. 12TH ST	S WASHINGTON	East	Single Post	2x2	Concrete	Right	Steel	8/13/2014	Acceptable	43.864548	-116.500167
234	139	R7-9	W	Aluminum	Engineer Grade	Clear	Replace	138	NO PARKING BIKE LANE	12	18	8		0	4	8	TSJ	E. 12TH ST	WASHINGTON	West	Single Post	2x2	Concrete	Right	Steel	8/13/2014	Acceptable	43.864685	-116.500745
235	140	R16-X12	W	Aluminum	Engineer Grade	Clear	Good	140	DO NOT BLOCK DRIVEWAY	18	24	8		0	0	8	TSJ	E. 12TH ST	S WASHINGTON	East	Single Post	2x2	Concrete	Right	Steel	8/13/2014	Acceptable	43.864567	-116.500519
236	141	R7-9	W	Aluminum	Engineer Grade	Clear	Replace	141		18	24	7		0	0	8	TSJ	E. 12TH ST	WASHINGTON	East	Single Post	2x2	Concrete	Right	Steel	8/13/2014	Acceptable	43.864566	-116.501029
237	142	R3-17	W	Aluminum	Engineer Grade	Clear	Fair	142		24	30	7		0	0	5	TSJ	E. 12TH ST	S COMMERCIAL AVE	West	Single Post	2x2	Soil	Right	Steel	8/13/2014	Acceptable	43.864679	-116.501492
238	143	R7-9	W	Aluminum	Engineer Grade	Clear	Poor	143		18	24	7		0	0	3	TSJ	E. 12TH ST	S COMMERCIAL	West	Single Post	2x2	Soil	Right	Steel	8/13/2014	Acceptable	43.864683	-116.502083
239	144	R7-9	W	Aluminum	Engineer Grade	Clear	Poor	144		18	24	7		0	0	3	TSJ	E. 12TH ST	S COMMERCIAL	East	Single Post	2x2	Soil	Right	Steel	8/13/2014	Acceptable	43.864566	-116.501939
240	145	W3-1A	W	Aluminum	Engineer Grade	Tree Obscured	Good	145		41	41	7		0	0	9	TSJ	E. 12TH ST	S COMMERCIAL AVE	East	Single Post	2x2	Soil	Right	Steel	8/13/2014	Acceptable	43.864562	-116.501871
241	146	R1-1	W	Aluminum	Engineer Grade	Clear	Good	146		24	24	8		0	0	3	TSJ	E. 12TH ST	S BOISE AVE	West	Single Post	2x2	Soil	Right	Steel	8/13/2014	Acceptable	43.864686	-116.502616
242	146	S2-1	W	Aluminum	Engineer Grade	Clear	Good	146		35	36	4		0	0	3	TSJ	E. 12TH ST	S BOISE AVE	West	Single Post	2x2	Soil	Right	Steel	8/13/2014	Acceptable	43.864686	-116.502616
243	146	R1-4	W	Aluminum	Engineer Grade	Clear	Good	146		9	18	5		0	0	3	TSJ	E. 12TH ST	S BOISE AVE	West	Single Post	2x2	Soil	Right	Steel	8/13/2014	Acceptable	43.864686	-116.502616
244	147	R2-1-25	W	Aluminum	Engineer Grade	Clear	Fair	147		18	24	8		0	0	6	TSJ	S BOISE AVE	W 12TH ST	South	Single Post	2x2	Soil	Right	Steel	8/13/2014	Acceptable	43.864197	-116.5028
245	148	W11-1	W	Aluminum	Engineer Grade	Clear	Fair	148	STOP	41	41	7		0	10	4	TSJ	S BOISE AVE	E 12TH ST	North	Single Post	2x2	Soil	Right	Steel	8/13/2014	Acceptable	43.863851	-116.502703
246	149	W3-1	W	Aluminum	Engineer Grade	Clear	Good	149	STOP	41	41	4		0	10	8	TSJ	S BOISE AVE	HWY 16	South	Single Post	2x2	Soil	Right	Steel	8/13/2014	Acceptable	43.862373	-116.5028
247	150	R1-1	W	Aluminum	Engineer Grade	Clear	Good	150		30	30	8		0	0	5	TSJ	S BOISE AVE	HWY 16	South	Single Post	4x4	Soil	Right	Steel	8/13/2014	Acceptable	43.861401	-116.502792
248	151	R2-1-25	W	Aluminum	Engineer Grade	Clear	Good	151		24	30	8		0	0	20	TSJ	S BOISE AVE	HWY 16	North	Single Post	2x2	Soil	Right	Steel	8/13/2014	Acceptable	43.861469	-116.502614
249	152	R1-1	W	Aluminum	Engineer Grade	Clear	Fair	152		30	30	8		0	0	8	TSJ	S BOISE AVE	W 12TH ST	North	Single Post	2x2	Soil	Right	Steel	8/13/2014	Acceptable	43.864529	-116.502625
250	152	R1-4	W	Aluminum	Engineer Grade	Clear	Good	152		9	18	8		0	0	8	TSJ	S BOISE AVE	W 12TH ST	North	Single Post	2x2	Soil	Right	Steel	8/13/2014	Acceptable	43.864529	-116.502625
251	153	S2-1	W	Aluminum	Engineer Grade	Clear	Fair	153		35	36	8		0	0	15	TSJ	S BOISE AVE	W 12TH ST	North	Single Post	2x2	Soil	Right	Steel	8/13/2014	Acceptable	43.864538	-116.502609
252	154	R3-17	W	Aluminum	Engineer Grade	Clear	Fair	154		24	30	8		0	0	8	TSJ	W 12TH ST	S BOISE AVE	East	Single Post	2x2	Soil	Right	Steel	8/13/2014	Acceptable	43.864557	-116.502569
253	155	R1-1	W	Aluminum	Engineer Grade	Clear	Good	155		30	30	8		0	0	3	TSJ	S BOISE AVE	W 12TH ST	East	Single Post	2x2	Concrete	Right	Steel	8/13/2014	Acceptable	43.864606	-116.502912
254	155	R1-4	W	Aluminum	Engineer Grade	Clear	Good	155		9	18	8		0	0	3	TSJ	S BOISE AVE	W 12TH ST	East	Single Post	2x2	Concrete	Right	Steel	8/13/2014	Acceptable	43.864606	-116.502912
255	156	S2-1	W	Aluminum	Engineer Grade	Clear	Fair	155		35	36	7		0	0	7	TSJ	S BOISE AVE	W 12TH ST	East	Single Post	2x2	Soil	Right	Steel	8/13/2014	Acceptable	43.864573	-116.502857
256	157	OM-3R	W	Aluminum	Engineer Grade	Clear	Good	157		12	36	2		0	0	1	TSJ	S BOISE AVE	W 12TH ST	West	Single Post	2x2	Concrete	Left	Steel	8/13/2014	Acceptable	43.864605	-116.502886
257	158	OM-3L	W	Aluminum	Engineer Grade	Clear	Poor	158		12	36	2		0	0	1	TSJ	S BOISE AVE	W 12TH ST	West	Single Post	2x2	Concrete	Right	Steel	8/13/2014	Acceptable	43.864692	-116.502885
258	159	OM-3R	W	Aluminum	Engineer Grade	Clear	Good	159		12	36	2		0	0	1	TSJ	S BOISE AVE	W 12TH ST	East	Single Post	2x2	Concrete	Left	Steel	8/13/2014	Acceptable	43.864706	-116.503038
259	160	OM-3L	W	Aluminum	Engineer Grade	Clear	Good	160		12	36	2		0	0	1	TSJ	S BOISE AVE	W 12TH ST	East	Single Post	2x2	Concrete	Right	Steel	8/13/2014	Acceptable	43.864616	-116.503044
260	161	S5-2	W	Aluminum	Engineer Grade	Clear	Poor	161		24	30	7		0	0	7	TSJ	S BOISE AVE	S 12TH ST	East	Single Post	2x2	Soil	Right	Steel	8/13/2014	Acceptable	43.864606	-116.503142
261	162	R3-17	W	Aluminum	Engineer Grade	Clear	Good	162		24	30	8		0	0	3	TSJ	S BOISE AVE	12TH ST	West	Single Post	2x2	Soil	Right	Steel	8/13/2014	Acceptable	43.864742	-116.503341
262	163	R2-1-20	W	Aluminum	Engineer Grade	Partially Obscured	Fair	163		24	30	10		0	0	8	TSJ	W 12TH ST	S BOISE AVE	West	Single Post	2x2	Soil	Right	Steel	8/13/2014	Acceptable	43.864742	-116.503607
263	163	S4-3	W	Aluminum	Engineer Grade	Clear	Good	163		8	24	10		0	0	8	TSJ	W 12TH ST	S BOISE AVE	West	Single Post	2x2	Soil	Right	Steel	8/13/2014	Acceptable	43.864742	-116.503607
264	164	R7-9	W	Aluminum	Engineer Grade	Clear	Fair	162		24	30	7		0	0	7	TSJ	W 12TH ST	S BOISE AVE	West	Single Post	2x2	Soil	Right	Steel	8/13/2014	Acceptable	43.864746	-116.503836
265	165	R7-9	W	Aluminum	Engineer Grade	Clear	Poor	165		12	18	8		0	0	7	TSJ	W 12TH ST	S BOISE AVE	East	Single Post	2x2	Soil	Right	Steel	8/13/2014	Acceptable	43.864632	-116.504714
266	166	R3-17	W	Aluminum	Engineer Grade	Clear	Fair	166		24	30	8		0	0	10	TSJ	W 12TH ST	S BOISE AVE	West	Single Post	2x2	Soil	Right	Steel	8/13/2014	Acceptable	43.864762	-116.505001
267	167	S2-1	W	Aluminum	Engineer Grade	Clear	Fair	167		35	36	8		0	0	8	TSJ	W 12TH ST	WILLIAMS RD	West	Single Post	2x2	Soil	Right	Steel	8/13/2014	Acceptable	43.864767	-116.505335
268	168	R16-X12	W	Aluminum	Engineer Grade	Clear	Fair	168		18	24	7		0	0	7	TSJ	W 12TH ST	WILLIAMS RD	East	Single Post	2x2	Concrete	Right	Steel	8/13/2014	Acceptable	43.864632	-116.505223
269	168	M6-3	W	Aluminum	Engineer Grade	Clear	Fair	168		9	12	8		0	0	7	TSJ	W 12TH ST	WILLIAMS RD	East	Single Post	2x2	Concrete	Right	Steel	8/13/2014	Acceptable	43.864632	-116.505223
270	169	R7-9	W	Aluminum	Engineer Grade	Clear	Good	165		12	18	8		0	0	7	TSJ	W 12TH ST	WILLIAMS RD	East	Single Post	2x2	Soil	Right	Steel	8/13/2014	Acceptable	43.864643	-116.505613
271	170	S2-1	W	Aluminum	Engineer Grade	Clear	Good	169		35	36	7		0	0	7	TSJ	W 12TH ST	WILLIAMS RD	East	Single Post	2x2	Soil	Right	Steel	8/13/2014	Repair	43.864645	-116.505733
272	171	R7-9	W	Aluminum	Engineer Grade	Clear	Replace	171		12	18	8		0	0	8	TSJ	W 12TH ST	JOHNSON AVE	West	Single Post	2x2	Soil	Right	Steel	8/13/2014	Acceptable	43.86476	-116.506286
273	172	R7-9	W	Aluminum	Engineer Grade	Clear	Fair	172		12	18	7		0	0	10	TSJ	W 12TH ST	JOHNSON AVE	East	Single Post	2x2	Soil	Right	Steel	8/13/2014	Acceptable	43.864638	-116.506538
274	173	R3-17	W	Aluminum	Engineer Grade	Clear	Poor	173		18	24	10		0	0	5	TSJ	W 12TH ST	JOHNSON ST	West	Single Post	2x2	Soil	Right	Steel	8/13/2014	Acceptable	43.864761	-116.507002
275	174	R16-X12	W	Aluminum	Engineer Grade	Clear	Good	175	END	6	24	7		0	0	5	TSJ	W 12TH ST	JOHNSON	West	Single Post	2x2	Soil	Right	Steel	8/13/2014	Acceptable	43.864764	-116.507522
276	174	R16-X12	W	Aluminum	Engineer Grade	Clear	Good	175	BIKE ROUTE	18	24	8		0	0	5	TSJ	W 12TH ST	JOHNSON	West	Single Post	2x2	Soil	Right	Steel	8/13/2014	Acceptable	43.864764	-116.507522
277	175	S2-1	W	Aluminum	Engineer Grade	Clear	Fair	176		35	36	6		0	0	5	TSJ	W 12TH ST	JOHNSON	West	Single Post	2x2	Soil	Right	Steel	8/13/2014	Acceptable	43.864778	-116.507693
278	176	R7-13	W	Aluminum	Engineer Grade	Clear	Good	177		12	18	4		0	0	5	TSJ	W 12TH ST	JOHNSON	West	Single Post	2x2	Soil	Right	Steel	8/13/2014	Acceptable	43.864774	-116.507844
279	177	R16-X12	W	Aluminum	Engineer Grade	Clear	Good	178	BEGIN	6	24	8		0	0	5	TSJ	W 12TH ST	JOHNSON	East	Single Post	2x2	Concrete	Right	Steel	8/13/2014	Acceptable	43.864627	-116.507654
280	177	R16-X12	W	Aluminum	Engineer Grade	Clear	Fair	178	BIKE ROUTE	18	24	8		0	0	5	TSJ	W 12TH ST	JOHNSON	East	Single Post	2x2	Concrete	Right	Steel	8/13/2014	Acceptable	43.864627	-116.507654
281	178	R7-9	W	Aluminum	Engineer Grade	Tree Obscured	Fair	179		12	18	8		0	0	5	TSJ	W 12TH ST	JOHNSON	East	Single Post	2x2	Concrete	Right	Steel	8/13/2014	Acceptable	43.864627	-116.507553
282	179	R7-5	W	Aluminum	Engineer Grade	Clear	Fair	180		12	18	6		0	0	6	TSJ	W 12TH ST	CHEROKEE ST	East	Single Post	4x4	Soil	Right	Steel	8/13/2014	Acceptable	43.864618	-116.50814
283	180	R7-9	W	Aluminum	Engineer Grade	Clear	Good	174		12	18	8		0	0	6	TSJ	W 12TH ST	JOHNSON	West	Single Post	2x2	Soil	Right	Steel	8/13/2014	Acceptable	43.86476	-116.507209
284	181	R3-16	W	Aluminum	Engineer Grade	Clear	Fair	181		24	30	8		0	0	7	TSJ	W 12TH ST	CHEROKEE AVE	East	Single Post	2x2	Concrete	Right	Steel	8/13/2014	Acceptable	43.864629	-116.508853
285	182	R2-1-20	W	Aluminum	Engineer Grade	Clear	Fair	182		24	30	8		0	0	10	TSJ	W 12TH ST	CHEROKEE AVE	East	Single Post	2x2	Concrete	Right	Steel	8/13/2014	Acceptable	43.86462	-116.509135
286	183	OM-3L	W	Aluminum	Engineer Grade	Clear	Fair	183		12	36	1		0	0	8	TSJ	W 12TH ST	CHEROKEE	West	Single Post	Telephone Pole	Soil	Right	Steel	8/13/2014	Acceptable	43.864801	-116.509994
287	184	R16-X12	W	Aluminum	Engineer Grade	Tree Obscured	Good	184	EMMETT CITY LIMITS	24	30	10		0	0	3	TSJ	W 12TH ST	CHEROKEE	East	Single Post	2x2	Soil	Right	Steel	8/13/2014	Acceptable	43.864613	-116.509894
288	184	R16-X12	W	Aluminum	Engineer Grade	Tree Obscured	Good	184	SPEED LIMIT UNLESS OTHERWISE POSTED	30	30	8	20	0	0	3	TSJ	W 12TH ST	CHEROKEE	East	Single Post	2x2	Soil	Right	Steel	8/13/2014	Acceptable	43.864613	-116.509894
289	185	D3	S	Aluminum	Engineer Grade	Clear	Good	185	W 12TH ST	6	32	11		0	4	7	TSJ	S CHEROKEE AVE	W 12TH ST	South	Single Post	2x2	Soil	Right	Steel	8/13/2014	Acceptable	43.864832	-116.509342
290	185	D3	S	Aluminum	Engineer Grade	Clear	Good	185	E 12TH ST	6	32	11		0	4	7	TSJ	S CHEROKEE AVE	W 12TH ST	South	Single Post	2x2	Soil	Right	Steel	8/13/2014	Acceptable	43.864832	-116.509342
291	185	R1-1	S	Aluminum	Engineer Grade	Clear	Good	185		30	30	11		0	0	7	TSJ	S CHEROKEE AVE	W 12TH ST	South	Single Post	2x2	Soil	Right	Steel	8/13/2014	Acceptable	43.864832	-116.509342
292	186	R2-1-20	S	Aluminum	Engineer Grade	Clear	Good	186		24	30	8		0	0	7	TSJ	S CHEROKEE AVE	CHEYENNE CT	North	Single Post	2x2	Concrete	Right	Steel	8/13/2014	Acceptable	43.86512	-116.509125
293	187	R1-1	S	Aluminum	Engineer Grade	Clear	Good	187		24	24	7		0	0	7	TSJ	S CHEROKEE AVE	W APACHE	North	Single Post	2x2	Soil	Right	Steel	8/13/2014	Acceptable	43.868122	-116.509068
294	187	D3	S	Aluminum	Engineer Grade	Clear	Good	187	W APACHE ST	6	32	8		0	4	7	TSJ	S CHEROKEE AVE	W APACHE	North	Single Post	2x2	Soil	Right	Steel	8/13/2014	Acceptable	43.868122	-116.509068
295	187	D3	S	Aluminum	Engineer Grade	Clear	Good	187	S CHEROKEE AVE	6	32	8		0	4	7	TSJ	S CHEROKEE AVE	W APACHE	North	Single Post	2x2	Soil	Right	Steel	8/13/2014	Acceptable	43.868122	-116.509068
296	188	D3	S	Aluminum	Engineer Grade	Clear	Good	188	W APACHE	6	32	9		0	4	12	TSJ	S PAWNEE AVE	W APACHE ST	North	Single Post	2x2	Soil	Right	Steel	8/13/2014	Acceptable	43.868134	-116.508076
297	189	D3	S	Aluminum	Engineer Grade	Clear	Good	189	PAWNEE ST	6	32	9		0	4	5	TSJ	S PAWNEE ST	W NAVAJO ST	East	Single Post	2in. Channel	Soil	Right	Steel	8/13/2014	Acceptable	43.866017	-116.50803
298	189	D3	S	Aluminum	Engineer Grade	Clear	Good	189	NAVAJO ST	6	32	9		0	4	5	TSJ	S PAWNEE ST	W NAVAJO ST	East	Single Post	2in. Channel	Soil	Right	Steel	8/13/2014	Acceptable	43.866017	-116.50803
299	190	D3	E	Aluminum	Engineer Grade	Clear	Good	190	S CHEROKEE ST	6	32	11		0	4	7	TSJ	W NAVAJO ST	S CHEROKEE ST	West	Single Post	2x2	Soil	Right	Steel	8/13/2014	Acceptable	43.866054	-116.509014
300	190	D3	E	Aluminum	Engineer Grade	Clear	Good	190	W NAVAJO ST	6	32	11		0	4	7	TSJ	W NAVAJO ST	S CHEROKEE ST	West	Single Post	2x2	Soil	Right	Steel	8/13/2014	Acceptable	43.866054	-116.509014
301	190	R1-1	E	Aluminum	Engineer Grade	Clear	Good	190		30	30	11		0	0	7	TSJ	W NAVAJO ST	S CHEROKEE ST	West	Single Post	2x2	Soil	Right	Steel	8/13/2014	Acceptable	43.866054	-116.509014
302	188	D3	E	Aluminum	Engineer Grade	Clear	Good	188	PAWNEE AVE	6	32	9		0	4	12	TSJ	S PAWNEE AVE	W APACHE ST	North	Single Post	2x2	Soil	Right	Steel	8/13/2014	Acceptable	43.868134	-116.508076
303	191	D3	S	Aluminum	Engineer Grade	Clear	Good	191	S CHEROKEE ST	6	32	10		0	4	10	TSJ	S CHEROKEE AVE	W CHEYENNE CT	West	Single Post	2x2	Soil	Right	Steel	8/13/2014	Acceptable	43.865318	-116.509095
304	191	D3	S	Aluminum	Engineer Grade	Clear	Good	191	CHEYENNE CT	6	32	10		0	4	10	TSJ	S CHEROKEE AVE	W CHEYENNE CT	West	Single Post	2x2	Soil	Right	Steel	8/13/2014	Acceptable	43.865318	-116.509095
305	191	R1-1	S	Aluminum	Engineer Grade	Clear	Good	191		30	30	10		0	0	10	TSJ	S CHEROKEE AVE	W CHEYENNE CT	West	Single Post	2x2	Soil	Right	Steel	8/13/2014	Acceptable	43.865318	-116.509095
306	192	D3	E	Aluminum	Engineer Grade	Clear	Good	192	W COMMANCHE ST	6	32	9		0	4	9	TSJ	W COMMANCHE ST	S CHEROKEE AVE	East	Single Post	2x2	Soil	Right	Steel	8/13/2014	Acceptable	43.867108	-116.509354
307	192	D3	E	Aluminum	Engineer Grade	Clear	Good	192	S CHEROKEE AVE	6	32	9		0	4	9	TSJ	W COMMANCHE ST	S CHEROKEE AVE	East	Single Post	2x2	Soil	Right	Steel	8/13/2014	Acceptable	43.867108	-116.509354
308	192	R1-1	E	Aluminum	Engineer Grade	Clear	Good	192		24	24	9		0	8	9	TSJ	W COMMANCHE ST	S CHEROKEE AVE	East	Single Post	2x2	Soil	Right	Steel	8/13/2014	Acceptable	43.867108	-116.509354
309	193	D3	S	Aluminum	Engineer Grade	Clear	Good	193	COMANCHE TRAIL	6	32	9		0	4	9	TSJ	SIOUX AVE	COMANCHE TRAIL	South	Single Post	2x2	Soil	Right	Steel	8/13/2014	Acceptable	43.867291	-116.510329
310	193	D3	S	Aluminum	Engineer Grade	Clear	Good	193	SIOUX AVE	6	32	9		0	4	9	TSJ	SIOUX AVE	COMANCHE TRAIL	South	Single Post	2x2	Soil	Right	Steel	8/13/2014	Acceptable	43.867291	-116.510329

Sign ID	Support ID	MUTCD	Facing	Backing	Face Material	Visibility	Sign Condition	Photo No.	Sign Text	Length (in)	Width (in)	Height (in)	Num. Text	Num. Size (in)	Text Size (in)	Offset (ft)	Inspector	Road Name	Location Desc.	Travel Direction	Post Type	Post Size	Post Base	Post Pos.	Post Mat'l.	Date Insp.	Post Rating	Latitude	Longitude
311	193	R1-1	S	Aluminum	Engineer Grade	Clear	Good	193		24	24	9		0	0	9	TSJ	SIOUX AVE	COMANCHE TRAIL	South	Single Post	2x2	Soil	Right	Steel	8/13/2014	Acceptable	43.867291	-116.510329
312	194	D3	E	Aluminum	Engineer Grade	Clear	Good	194	APACHE ST	6	32	9		0	4	9	TSJ	SIOUX AVE	APACHE ST	North	Single Post	2x2	Soil	Right	Steel	8/13/2014	Acceptable	43.868138	-116.510125
313	194	D3	E	Aluminum	Engineer Grade	Clear	Good	194	SIOUX AVE	6	32	9		0	4	9	TSJ	SIOUX AVE	APACHE ST	North	Single Post	2x2	Soil	Right	Steel	8/13/2014	Acceptable	43.868138	-116.510125
314	194	R1-1	E	Aluminum	Engineer Grade	Clear	Good	194		24	24	9		0	0	9	TSJ	SIOUX AVE	APACHE ST	North	Single Post	2x2	Soil	Right	Steel	8/13/2014	Acceptable	43.868138	-116.510125
316	195	D3	E	Aluminum	Engineer Grade	Clear	Good	195	BLACKFOOT AVE	6	32	9		0	4	7	TSJ	BLACKFOOT AVE	APACHE ST	South	Single Post	2x2	Soil	Right	Steel	8/13/2014	Acceptable	43.868383	-116.509765
317	195	D3	E	Aluminum	Engineer Grade	Clear	Good	195	APACHE ST	6	32	9		0	4	7	TSJ	BLACKFOOT AVE	APACHE ST	South	Single Post	2x2	Soil	Right	Steel	8/13/2014	Acceptable	43.868383	-116.509765
318	196	D3	E	Aluminum	Engineer Grade	Clear	Good	196	APACHE ST	6	32	9		0	4	7	TSJ	COMANCHE TRAIL	APACHE ST	North	Single Post	2x2	Soil	Right	Steel	8/13/2014	Acceptable	43.868089	-116.511045
319	196	D3	E	Aluminum	Engineer Grade	Clear	Good	196	COMANCHE TRAIL	6	32	9		0	4	7	TSJ	COMANCHE TRAIL	APACHE ST	North	Single Post	2x2	Soil	Right	Steel	8/13/2014	Acceptable	43.868089	-116.511045
320	196	R1-1	E	Aluminum	Engineer Grade	Clear	Good	196		24	24	9		0	0	7	TSJ	COMANCHE TRAIL	APACHE ST	North	Single Post	2x2	Soil	Right	Steel	8/13/2014	Acceptable	43.868089	-116.511045
321	197	R2-1-20	E	Aluminum	Engineer Grade	Clear	Good	197		24	30	7		0	0	8	TSJ	APACHE	MILL RD	East	Single Post	2x2	Soil	Right	Steel	8/13/2014	Acceptable	43.868029	-116.512078
322	198	D3	E	Aluminum	Engineer Grade	Clear	Good	198	APACHE ST	6	32	8		0	4	8	TSJ	APACHE ST	MILL	West	Single Post	2x2	Soil	Right	Steel	8/13/2014	Acceptable	43.868187	-116.512505
323	198	D3	E	Aluminum	Engineer Grade	Clear	Good	198	MILL RD	6	32	8		0	4	8	TSJ	APACHE ST	MILL	West	Single Post	2x2	Soil	Right	Steel	8/13/2014	Acceptable	43.868187	-116.512505
324	198	R1-1	E	Aluminum	Engineer Grade	Clear	Good	198		24	24	8		0	0	8	TSJ	APACHE ST	MILL	West	Single Post	2x2	Soil	Right	Steel	8/13/2014	Acceptable	43.868187	-116.512505
325	199	R16-X12	E	Aluminum	Engineer Grade	Clear	Good	199	EMMETT CITY LIMITS	30	30	9		0	0	5	TSJ	MILL RD	APACHE ST	North	Single Post	2x2	Soil	Right	Steel	8/13/2014	Acceptable	43.867887	-116.512619
326	199	R16-X12	E	Aluminum	Engineer Grade	Clear	Poor	199	SPPED LIMIT UNLESS OTHERWISE POSTED	30	39	9	20	0	0	5	TSJ	MILL RD	APACHE ST	North	Single Post	2x2	Soil	Right	Steel	8/13/2014	Acceptable	43.867887	-116.512619
327	200	W13-1	E	Aluminum	Engineer Grade	Clear	Good	200	MPH	24	30	8	35	12	7	5	TSJ	MILL RD	APACHE ST	North	Single Post	2x2	Soil	Right	Steel	8/13/2014	Acceptable	43.869029	-116.512623
328	201	R2-1-35	E	Aluminum	Engineer Grade	Clear	Good	201	SPEED LIMIT	24	30	8	35	10	4	3	TSJ	S MILL RD	HOMESTEAD DRIVE	South	Single Post	2x2	Soil	Right	Wood	8/13/2014	Acceptable	43.869267	-116.512733
329	202	W13-1	E	Aluminum	Engineer Grade	Clear	Fair	202	MPH	24	24	8	25	0	0	3	TSJ	MILL RD	DITTMAN DR	North	Single Post	2x2	Soil	Right	Steel	8/13/2014	Acceptable	43.870685	-116.512624
330	202	W1-2L	E	Aluminum	Engineer Grade	Clear	Fair	202		41	41	8		0	0	3	TSJ	MILL RD	DITTMAN DR	North	Single Post	2x2	Soil	Right	Steel	8/13/2014	Acceptable	43.870685	-116.512624
331	203	W2-2	E	Aluminum	Engineer Grade	Clear	Fair	203		41	41	8		0	0	3	TSJ	MILL RD	DITTMAN DRIVE	North	Single Post	2x2	Concrete	Right	Steel	8/13/2014	Acceptable	43.870902	-116.512625
332	203	W42-8	E	Aluminum	Engineer Grade	Clear	Fair	203		18	30	5		0	0	3	TSJ	MILL RD	DITTMAN DRIVE	North	Single Post	2x2	Concrete	Right	Steel	8/13/2014	Acceptable	43.870902	-116.512625
333	204	W10-1	E	Aluminum	Engineer Grade	Clear	Fair	204		36	36	6		0	0	3	TSJ	MILL RD	DITTMAN DRIVE	North	Single Post	2x2	Soil	Right	Steel	8/13/2014	Acceptable	43.870989	-116.51262
334	205	R1-1	E	Aluminum	Engineer Grade	Clear	Good	204		24	24	10		0	0	5	TSJ	MILL RD	DITTMAN DRIVE	East	Single Post	2x2	Soil	Right	Steel	8/13/2014	Acceptable	43.870797	-116.51285
335	205	D3	E	Aluminum	Engineer Grade	Clear	Good	204	MILL RD	6	32	8		0	4	5	TSJ	MILL RD	DITTMAN DRIVE	East	Single Post	2x2	Soil	Right	Steel	8/13/2014	Acceptable	43.870797	-116.51285
336	205	D3	E	Aluminum	Engineer Grade	Clear	Good	204	DITTMAN DRIVE	6	32	8		0	4	5	TSJ	MILL RD	DITTMAN DRIVE	East	Single Post	2x2	Soil	Right	Steel	8/13/2014	Acceptable	43.870797	-116.51285
337	206	R1-1	E	Aluminum	Engineer Grade	Clear	Fair	206	STOP	30	30	11		0	10	5	TSJ	KAETZEL WAY	DITTMAN STREET	North	Single Post	2x2	Soil	Right	Steel	8/13/2014	Acceptable	43.869884	-116.515062
338	206	D3	E	Aluminum	Engineer Grade	Clear	Good	206	KAETZEL WAY	6	32	11		0	4	5	TSJ	KAETZEL WAY	DITTMAN STREET	North	Single Post	2x2	Soil	Right	Steel	8/13/2014	Acceptable	43.869884	-116.515062
339	206	D3	E	Aluminum	Engineer Grade	Clear	Good	206	DITTMAN STREET	6	32	11		0	4	5	TSJ	KAETZEL WAY	DITTMAN STREET	North	Single Post	2x2	Soil	Right	Steel	8/13/2014	Acceptable	43.869884	-116.515062
340	207	R1-1	E	Aluminum	Engineer Grade	Clear	Good	207		30	30	10		0	0	5	TSJ	KAETZEL WAY	HOMESTEAD DRIVE	South	Single Post	2x2	Soil	Right	Steel	8/13/2014	Acceptable	43.869565	-116.513383
341	207	D3	E	Aluminum	Engineer Grade	Clear	Good	207	HOMESTEAD DRIVE	6	32	10		0	4	5	TSJ	KAETZEL WAY	HOMESTEAD DRIVE	South	Single Post	2x2	Soil	Right	Steel	8/13/2014	Acceptable	43.869565	-116.513383
342	207	D3	E	Aluminum	Engineer Grade	Clear	Good	207	KAETZEL WAY	6	32	10		0	4	5	TSJ	KAETZEL WAY	HOMESTEAD DRIVE	South	Single Post	2x2	Soil	Right	Steel	8/13/2014	Acceptable	43.869565	-116.513383
343	208	R1-1	E	Aluminum	Engineer Grade	Clear	Good	208		24	24	8		0	0	8	TSJ	HOMESTEAD DRIVE	SOUTH MILL ROAD	East	Single Post	2x2	Soil	Right	Steel	8/13/2014	Acceptable	43.869538	-116.512878
344	208	D3	E	Aluminum	Engineer Grade	Clear	Good	208	SOUTH MILL ROAD	6	32	8		0	4	8	TSJ	HOMESTEAD DRIVE	SOUTH MILL ROAD	East	Single Post	2x2	Soil	Right	Steel	8/13/2014	Acceptable	43.869538	-116.512878
345	208	D3	E	Aluminum	Engineer Grade	Clear	Good	208	HOMESTEAD DRIVE	6	32	8		0	4	8	TSJ	HOMESTEAD DRIVE	SOUTH MILL ROAD	East	Single Post	2x2	Soil	Right	Steel	8/13/2014	Acceptable	43.869538	-116.512878
346	209	D3	E	Aluminum	Engineer Grade	Clear	Good	209	HOMESTEAD	6	32	11		0	4	11	TSJ	HOMESTEAD DR	DITTMAN DR	South	Single Post	2x2	Soil	Right	Steel	8/13/2014	Acceptable	43.868104	-116.517159
347	209	D3	E	Aluminum	Engineer Grade	Clear	Good	209	DITTMAN DR	6	32	11		0	4	11	TSJ	HOMESTEAD DR	DITTMAN DR	South	Single Post	2x2	Soil	Right	Steel	8/13/2014	Acceptable	43.868104	-116.517159
348	209	R1-1	E	Aluminum	Engineer Grade	Clear	Good	209		24	24	11		0	0	11	TSJ	HOMESTEAD DR	DITTMAN DR	South	Single Post	2x2	Soil	Right	Steel	8/13/2014	Acceptable	43.868104	-116.517159
349	210	R16-X12	E	Aluminum	Engineer Grade	Clear	Good	210	EMMETT CITY LIMITS	24	30	8		0	0	11	TSJ	MILL RD	W MAIN ST	South	Single Post	2x2	Soil	Right	Steel	8/13/2014	Acceptable	43.871503	-116.513004
350	210	R16-X12	E	Aluminum	Engineer Grade	Clear	Good	210	SPEED LIMIT UNLESS OTHERWISE POSTED	24	30	8	20	0	0	5	TSJ	MILL RD	W MAIN ST	South	Single Post	2x2	Soil	Right	Steel	8/13/2014	Acceptable	43.871503	-116.513004
351	211	W1-8R	E	Aluminum	Engineer Grade	Clear	Poor	211		18	24	4		0	0	5	TSJ	MILL RD	W MAIN ST	South	Single Post	4x4	Soil	Right	Steel	8/13/2014	Repair	43.871481	-116.51298
352	212	R1-1	E	Aluminum	Engineer Grade	Clear	Good	212		30	30	12		0	0	5	TSJ	W MAIN ST	CASCADE RD	West	Single Post	2x2	Soil	Right	Steel	8/13/2014	Acceptable	43.87162	-116.512769
353	212	D3	E	Aluminum	Engineer Grade	Clear	Good	212	CASCADE RD	6	32	12		0	4	5	TSJ	W MAIN ST	CASCADE RD	West	Single Post	2x2	Soil	Right	Steel	8/13/2014	Acceptable	43.87162	-116.512769
354	212	D3	E	Aluminum	Engineer Grade	Clear	Good	212	W MAIN ST	6	32	12		0	4	5	TSJ	W MAIN ST	CASCADE RD	West	Single Post	2x2	Soil	Right	Steel	8/13/2014	Acceptable	43.87162	-116.512769
355	212	D3	E	Aluminum	Engineer Grade	Clear	Good	212	S MILL RD	6	32	12		0	4	5	TSJ	W MAIN ST	CASCADE RD	West	Single Post	2x2	Soil	Right	Steel	8/13/2014	Acceptable	43.87162	-116.512769
356	213	W10-4	E	Aluminum	Engineer Grade	Clear	Good	213		49	49	5		0	0	2	TSJ	MAIN ST	CASCADE RD	West	Single Post	2x2	Soil	Right	Steel	8/13/2014	Acceptable	43.871844	-116.512207
357	214	W3-1	E	Aluminum	Engineer Grade	Clear	Good	214		49	49	6		0	0	4	TSJ	MAIN ST	CASCADE RD	West	Single Post	2x2	Soil	Right	Steel	8/13/2014	Acceptable	43.87193	-116.512047
358	215	R2-1-30	E	Aluminum	Engineer Grade	Clear	Good	215		24	30	10		0	0	8	TSJ	MAIN ST	W 4TH ST	East	Single Post	2x2	Soil	Right	Steel	8/13/2014	Acceptable	43.872223	-116.51123
359	216	D9-2	E	Aluminum	Engineer Grade	Clear	Fair	216	H	24	24	5		0	18	8	TSJ	MAIN ST	MEADOWBROOK	East	Single Post	2x2	Soil	Right	Steel	8/13/2014	Acceptable	43.872718	-116.510238
360	216	R16-X12	E	Aluminum	Engineer Grade	Clear	Poor	216	HOSPITAL	6	24	8		0	0	8	TSJ	MAIN ST	MEADOWBROOK	East	Single Post	2x2	Soil	Right	Steel	8/13/2014	Acceptable	43.872718	-116.510238
361	216	D9-A	E	Aluminum	Engineer Grade	Clear	Poor	216		6	24	5		0	0	8	TSJ	MAIN ST	MEADOWBROOK	East	Single Post	2x2	Soil	Right	Steel	8/13/2014	Acceptable	43.872718	-116.510238
362	217	R2-1-20	E	Aluminum	Engineer Grade	Clear	Poor	217		18	24	12		0	0	8	TSJ	MAIN ST	MCAULIFFE AVE	East	Single Post	2x2	Concrete	Right	Steel	8/13/2014	Acceptable	43.87395	-116.507985
363	218	R1-1	E	Aluminum	Engineer Grade	Clear	Good	218		30	30	10		0	0	5	TSJ	MAIN ST	MCAULIFFE AVE	North	Single Post	2x2	Soil	Right	Steel	8/13/2014	Acceptable	43.874269	-116.507296
364	218	D3	E	Aluminum	Engineer Grade	Clear	Good	218	MCAULIFFE AVE	6	32	10		0	4	5	TSJ	MAIN ST	MCAULIFFE AVE	North	Single Post	2x2	Soil	Right	Steel	8/13/2014	Acceptable	43.874269	-116.507296
365	218	D3	E	Aluminum	Engineer Grade	Clear	Good	218		6	32	10		0	4	5	TSJ	MAIN ST	MCAULIFFE AVE	North	Single Post	2x2	Soil	Right	Steel	8/13/2014	Acceptable	43.874269	-116.507296
366	219	R2-1-30	E	Aluminum	Engineer Grade	Clear	Good	219		18	24	5		0	0	5	TSJ	MAIN ST	MCAULIFFE AVE	West	Single Post	2x2	Soil	Right	Steel	8/13/2014	Acceptable	43.874419	-116.507478
367	220	D3	E	Aluminum	Engineer Grade	Clear	Good	220	W4TH ST	6	32	10		0	4	8	TSJ	MCAULIFFE AVE	W 4TH ST	South	Single Post	2x2	Soil	Right	Steel	8/13/2014	Acceptable	43.872039	-116.507425
368	220	D3	E	Aluminum	Engineer Grade	Clear	Good	220	MCAULIFFE	6	32	10		0	4	8	TSJ	MCAULIFFE AVE	W 4TH ST	South	Single Post	2x2	Soil	Right	Steel	8/13/2014	Acceptable	43.872039	-116.507425
369	220	R1-1	E	Aluminum	Engineer Grade	Clear	Good	220		30	30	10		0	0	8	TSJ	MCAULIFFE AVE	W 4TH ST	South	Single Post	2x2	Soil	Right	Steel	8/13/2014	Acceptable	43.872039	-116.507425
370	221	R2-1-20	E	Aluminum	Engineer Grade	Clear	Good	221		18	24	8		0	0	4	TSJ	W 4TH ST	MCAULIFFE AVE	East	Single Post	2x2	Soil	Right	Steel	8/13/2014	Acceptable	43.871895	-116.508021
371	222	R2-1-20	E	Aluminum	Engineer Grade	Clear	Good	222		18	24	8		0	0	1	TSJ	W 4TH ST	W MAIN ST	East	Single Post	2x2	Soil	Right	Steel	8/13/2014	Acceptable	43.871897	-116.510818
372	223	D3	E	Aluminum	Engineer Grade	Clear	Good	223	W MAIN ST	6	32	8		0	4	3	TSJ	W 4TH ST	W MAIN ST	West	Single Post	2x2	Soil	Right	Steel	8/13/2014	Acceptable	43.872048	-116.511358
373	223	D3	E	Aluminum	Engineer Grade	Clear	Good	223	W 4TH ST	6	32	8		0	4	3	TSJ	W 4TH ST	W MAIN ST	West	Single Post	2x2	Soil	Right	Steel	8/13/2014	Acceptable	43.872048	-116.511358
374	223	R1-1	E	Aluminum	Engineer Grade	Clear	Good	223		30	30	8		0	0	3	TSJ	W 4TH ST	W MAIN ST	West	Single Post	2x2	Soil	Right	Steel	8/13/2014	Acceptable	43.872048	-116.511358
375	224	D3	S	Aluminum	Engineer Grade	Clear	Good	225	WILLIAMS RD	6	32	10		0	4	3	TSJ	WILLIAMS RD	W 4TH ST	North	Single Post	2x2	Soil	Right	Steel	8/13/2014	Acceptable	43.871888	-116.50532
376	224	D3	S	Aluminum	Engineer Grade	Clear	Good	225	W 4TH ST	6	32	10		0	4	3	TSJ	WILLIAMS RD	W 4TH ST	North	Single Post	2x2	Soil	Right	Steel	8/13/2014	Acceptable	43.871888	-116.50532
377	224	R1-1	S	Aluminum	Engineer Grade	Clear	Good	225		30	30	10		0	0	3	TSJ	WILLIAMS RD	W 4TH ST	North	Single Post	2x2	Soil	Right	Steel	8/13/2014	Acceptable	43.871888	-116.50532
378	225	R2-1-20	S	Aluminum	Engineer Grade	Clear	Replace	226		18	24	5		0	0	7	TSJ	WILLIAMS ST	5TH ST	South	Single Post	3in. Tube	Concrete	Right	Steel	8/13/2014	Acceptable	43.870773	-116.505648
379	226	D3	S	Aluminum	Engineer Grade	Clear	Good	227	WILLIAMS ST	6	32	8		0	4	3	TSJ	WILLIAMS ST	W 6TH ST	West	Single Post	2x2	Soil	Right	Steel	8/13/2014	Acceptable	43.86981	-116.505608
380	226	D3	S	Aluminum	Engineer Grade	Clear	Good	227	W 6TH ST	6	32	8		0	4	3	TSJ	WILLIAMS ST	W 6TH ST	West	Single Post	2x2	Soil	Right	Steel	8/13/2014	Acceptable	43.86981	-116.505608
381	226	W14-1	S	Aluminum	Engineer Grade	Clear	Fair	227		33	33	9		0	0	3	TSJ	WILLIAMS ST	W 6TH ST	West	Single Post	2x2	Soil	Right	Steel	8/13/2014	Acceptable	43.86981	-116.505608
382	227	R1-1	S	Aluminum	Engineer Grade	Clear	Fair	228		30	30	8		0	0	3	TSJ	WILLIAMS	6TH ST	East	Single Post	2x2	Soil	Right	Steel	8/13/2014	Acceptable	43.869743	-116.505632
383	228	W11-1	S	Aluminum	Engineer Grade	Clear	Good	229		41	41	10		0	0	3	TSJ	WILLIAMS	12TH ST	South	Single Post	2x2	Soil	Right	Steel	8/13/2014	Acceptable	43.865355	-116.505615
384	229	R2-1-20	S	Aluminum	Engineer Grade	Clear	Good	230		18	24	10		0	0	5	TSJ	WILLIAMS	12TH ST	North	Single Post	2x2	Soil	Right	Steel	8/13/2014	Acceptable	43.865225	-116.505482
385	230	R1-1	S	Aluminum	Engineer Grade	Clear	Good	231		30	30	10		0	0	3	TSJ	WILLIAMS RD	W 12TH ST	South	Single Post	2x2	Soil	Right	Steel	8/13/2014	Acceptable	43.864782	-116.505614
386	230	D3	S	Aluminum	Engineer Grade	Clear	Good	231	W 12TH ST	6	32	10		0	4	3	TSJ	WILLIAMS RD	W 12TH ST	South	Single Post	2x2	Soil	Right	Steel	8/13/2014	Acceptable	43.864782	-116.505614
387	230	D3	S	Aluminum	Engineer Grade	Clear	Good	231	WILLIAMS RD	6	32	10		0	4	3	TSJ	WILLIAMS RD	W 12TH ST	South	Single Post	2x2	Soil	Right	Steel	8/13/2014	Acceptable	43.864782	-116.505614
388	231	R1-1	S	Aluminum	Engineer Grade	Clear	Good	224		30	30	10		0	0	3	TSJ	JACOBSEN	4TH	North	Single Post	2x2	Soil	Right	Steel	8/13/2014	Acceptable	43.871922	-116.5114
389	231	D3	S	Aluminum	Engineer Grade	Clear	Good	224	JACOBSEN	6	32	10		0	4	3	TSJ	JACOBSEN	4TH	North	Single Post	2x2	Soil	Right	Steel	8/13/2014	Acceptable	43.871922	-116.5114

Sign ID	Support ID	MUTCD	Facing	Backing	Face Material	Visibility	Sign Condition	Photo No.	Sign Text	Length (in)	Width (in)	Height (in)	Num. Text	Num. Size (in)	Text Size (in)	Offset (ft)	Inspector	Road Name	Location Desc.	Travel Direction	Post Type	Post Size	Post Base	Post Pos.	Post Mat'l.	Date Insp.	Post Rating	Latitude	Longitude
390	231	D3	S	Aluminum	Engineer Grade	Clear	Good	224	W 4TH ST	6	32	10		0	4	3	TSJ	JACOBSEN	4TH	North	Single Post	2x2	Soil	Right	Steel	8/13/2014	Acceptable	43.871922	-116.5114
391	232	W11-1	N	Aluminum	Engineer Grade	Clear	Good	232		41	41	10		0	0	5	TSJ	JOHNSON AVE	W 12TH ST	South	Single Post	2x2	Soil	Right	Steel	8/14/2014	Acceptable	43.865429	-116.506924
392	233	D3	N	Aluminum	Engineer Grade	Tree Obscured	Good	233	W 12TH ST	6	32	10		0	4	5	TSJ	JOHNSON ST	W 12TH ST	South	Single Post	2x2	Soil	Right	Steel	8/14/2014	Acceptable	43.864777	-116.506918
393	233	D3	S	Aluminum	Engineer Grade	Tree Obscured	Good	233	W 12TH ST	6	32	10		0	0	5	TSJ	JOHNSON ST	W 12TH ST	South	Single Post	2x2	Soil	Right	Steel	8/14/2014	Acceptable	43.864777	-116.506918
394	233	R1-1	N	Aluminum	Engineer Grade	Tree Obscured	Good	233	STOP	30	30	10		0	10	5	TSJ	JOHNSON ST	W 12TH ST	South	Single Post	2x2	Soil	Right	Steel	8/14/2014	Acceptable	43.864777	-116.506918
395	233	W14-1	S	Aluminum	Engineer Grade	Tree Obscured	Poor	234		30	30	10		0	0	5	TSJ	JOHNSON ST	W 12TH ST	South	Single Post	2x2	Soil	Right	Steel	8/14/2014	Acceptable	43.864777	-116.506918
396	234	R7-13	E	Aluminum	Engineer Grade	Clear	Good	235	NO PARKING THIS SIDE OF STREET	12	18	7		0	3	7	TSJ	JADE PL	WILLIAMS RD	West	Single Post	2x2	Concrete	Right	Steel	8/14/2014	Acceptable	43.86935	-116.504748
397	235	D3	E	Aluminum	Engineer Grade	Clear	Good	236	WILLIAMS RD	6	32	11		0	0	9	TSJ	JADE PL	WILLIAMS RD	West	Single Post	2x2	Soil	Right	Steel	8/14/2014	Acceptable	43.869355	-116.505404
398	235	D3	E	Aluminum	Engineer Grade	Clear	Good	236	JADE PL	6	32	11		0	0	9	TSJ	JADE PL	WILLIAMS RD	West	Single Post	2x2	Soil	Right	Steel	8/14/2014	Acceptable	43.869355	-116.505404
399	235	R1-1	E	Aluminum	Engineer Grade	Clear	Good	236	STOP	30	30	11		0	10	9	TSJ	JADE PL	WILLIAMS RD	West	Single Post	2x2	Soil	Right	Steel	8/14/2014	Acceptable	43.869355	-116.505404
400	236	D3	E	Aluminum	Engineer Grade	Clear	Good	237	LINCOLN AVE	6	32	11		0	0	3	TSJ	LINCOLN AVE	W 12TH ST	South	Single Post	2x2	Soil	Right	Steel	8/14/2014	Acceptable	43.864739	-116.503225
401	236	D3	E	Aluminum	Engineer Grade	Clear	Good	237	W 12TH ST	6	32	11		0	0	3	TSJ	LINCOLN AVE	W 12TH ST	South	Single Post	2x2	Soil	Right	Steel	8/14/2014	Acceptable	43.864739	-116.503225
402	236	R1-1	E	Aluminum	Engineer Grade	Clear	Good	237	STOP	30	30	11		0	10	3	TSJ	LINCOLN AVE	W 12TH ST	South	Single Post	2x2	Soil	Right	Steel	8/14/2014	Acceptable	43.864739	-116.503225
403	237	R2-1-25	E	Aluminum	Engineer Grade	Clear	Poor	238		18	24	6		0	0	8	TSJ	LINCOLN AVE	W 12TH ST	North	Single Post	3in. Tube	Soil	Right	Steel	8/14/2014	Acceptable	43.865261	-116.503121
404	238	W11-1	E	Aluminum	Engineer Grade	Clear	Good	239		41	41	8		0	0	7	TSJ	LINCOLN AVE	W 12TH ST	South	Single Post	2x2	Soil	Right	Steel	8/14/2014	Acceptable	43.865408	-116.503264
405	239	D3	E	Aluminum	Engineer Grade	Clear	Good	240	W SIXTH ST	6	32	12		0	0	9	TSJ	W SIXTH ST	LINCOLN AVE	East	Single Post	3in. Tube	Soil	Right	Steel	8/14/2014	Acceptable	43.870063	-116.503286
406	239	D3	E	Aluminum	Engineer Grade	Clear	Good	240	LINCOLN AVE	6	32	12		0	0	9	TSJ	W SIXTH ST	LINCOLN AVE	East	Single Post	3in. Tube	Soil	Right	Steel	8/14/2014	Acceptable	43.870063	-116.503286
407	240	R2-1-25	E	Aluminum	Engineer Grade	Clear	Fair	241		18	24	5		0	0	5	TSJ	LINCOLN AVE	5TH ST	South	Single Post	2x2	Soil	Right	Steel	8/14/2014	Acceptable	43.870904	-116.503289
408	241	D3	E	Aluminum	Engineer Grade	Clear	Poor	242	LINCOLN ST	6	32	7		0	0	3	TSJ	5TH ST	LINCOLN AVE	East	Single Post	3in. Tube	Soil	Right	Steel	8/14/2014	Acceptable	43.870924	-116.503339
409	241	D3	E	Aluminum	Engineer Grade	Clear	Poor	242	5TH ST	6	32	7		0	0	3	TSJ	5TH ST	LINCOLN AVE	East	Single Post	3in. Tube	Soil	Right	Steel	8/14/2014	Acceptable	43.870924	-116.503339
410	241	R1-1	E	Aluminum	Engineer Grade	Clear	Poor	242	STOP	24	24	7		0	10	3	TSJ	5TH ST	LINCOLN AVE	East	Single Post	3in. Tube	Soil	Right	Steel	8/14/2014	Acceptable	43.870924	-116.503339
411	242	D3	E	Aluminum	Engineer Grade	Clear	Good	243	W TH ST	6	32	8		0	0	7	TSJ	LINCOLN AVE	W 4TH ST	North	Single Post	2x2	Soil	Right	Steel	8/14/2014	Acceptable	43.871839	-116.503139
412	242	D3	E	Aluminum	Engineer Grade	Clear	Good	243	LINCOLN AVE	6	32	8		0	0	7	TSJ	LINCOLN AVE	W 4TH ST	North	Single Post	2x2	Soil	Right	Steel	8/14/2014	Acceptable	43.871839	-116.503139
413	242	R1-1	E	Aluminum	Engineer Grade	Clear	Good	243	STOP	30	30	8		0	10	7	TSJ	LINCOLN AVE	W 4TH ST	North	Single Post	2x2	Soil	Right	Steel	8/14/2014	Acceptable	43.871839	-116.503139
414	243	R1-1	N	Aluminum	Engineer Grade	Clear	Replace	244	STOP	24	24	7		0	10	2	TSJ	LINCOLN AVE	4TH ST	South	Single Post	2x2	Soil	Right	Steel	8/14/2014	Acceptable	43.872013	-116.503342
415	244	D3	N	Aluminum	Engineer Grade	Clear	Good	245	LINCOLN AVE	6	32	12		0	0	4	TSJ	3RD ST	LINCOLN AVE	East	Single Post	2x2	Soil	Right	Steel	8/14/2014	Acceptable	43.872534	-116.503361
416	244	D3	N	Aluminum	Engineer Grade	Clear	Good	245	3RD ST	6	32	12		0	0	4	TSJ	3RD ST	LINCOLN AVE	East	Single Post	2x2	Soil	Right	Steel	8/14/2014	Acceptable	43.872534	-116.503361
417	245	R1-1	N	Aluminum	Engineer Grade	Clear	Good	246	STOP	30	30	8		0	10	5	TSJ	LINCOLN AVE	W 2ND ST	North	Single Post	2x2	Soil	Right	Steel	8/14/2014	Acceptable	43.873505	-116.503207
418	246	D3	N	Aluminum	Engineer Grade	Clear	Good	247		6	32	10		0	0	5	TSJ	LINCOLN AVE	W 2ND	South	Single Post	2x2	Soil	Right	Steel	8/14/2014	Acceptable	43.873663	-116.50336
419	246	D3	N	Aluminum	Engineer Grade	Clear	Good	247	W 2ND ST	6	32	10		0	0	5	TSJ	LINCOLN AVE	W 2ND	South	Single Post	2x2	Soil	Right	Steel	8/14/2014	Acceptable	43.873663	-116.50336
420	246	R1-1	N	Aluminum	Engineer Grade	Clear	Good	247	STOP	30	30	10		0	10	5	TSJ	LINCOLN AVE	W 2ND	South	Single Post	2x2	Soil	Right	Steel	8/14/2014	Acceptable	43.873663	-116.50336
421	247	D3	N	Aluminum	Engineer Grade	Clear	Good	248	LINCOLN AVE	6	32	12		0	0	5	TSJ	1ST ST	LINCOLN	East	Single Post	2x2	Soil	Left	Steel	8/14/2014	Acceptable	43.874626	-116.503397
422	247	D3	N	Aluminum	Engineer Grade	Clear	Fair	248	1ST ST	6	32	12		0	0	5	TSJ	1ST ST	LINCOLN	East	Single Post	2x2	Soil	Left	Steel	8/14/2014	Acceptable	43.874626	-116.503397
423	248	D3	N	Aluminum	Engineer Grade	Clear	Good	249	MAIN ST	6	32	11		0	0	5	TSJ	LINCOLN AVE	MAIN ST	North	Single Post	2x2	Soil	Right	Steel	8/14/2014	Acceptable	43.87548	-116.503095
424	248	D3	N	Aluminum	Engineer Grade	Clear	Good	249	LINCOLN AVE	6	32	11		0	0	5	TSJ	LINCOLN AVE	MAIN ST	North	Single Post	2x2	Soil	Right	Steel	8/14/2014	Acceptable	43.87548	-116.503095
425	248	R1-1	N	Aluminum	Engineer Grade	Clear	Good	249	STOP	30	30	11		0	10	5	TSJ	LINCOLN AVE	MAIN ST	North	Single Post	2x2	Soil	Right	Steel	8/14/2014	Acceptable	43.87548	-116.503095
426	249	D3	N	Aluminum	Engineer Grade	Clear	Good	250	MURRAY AVE	6	32	10		0	0	5	TSJ	MURRAY AVE	MAIN ST	North	Single Post	2x2	Soil	Right	Steel	8/14/2014	Acceptable	43.875478	-116.504565
427	249	D3	N	Aluminum	Engineer Grade	Clear	Good	250	MAIN ST	6	32	10		0	0	5	TSJ	MURRAY AVE	MAIN ST	North	Single Post	2x2	Soil	Right	Steel	8/14/2014	Acceptable	43.875478	-116.504565
428	249	R1-1	N	Aluminum	Engineer Grade	Clear	Good	250	STOP	30	30	10		0	10	5	TSJ	MURRAY AVE	MAIN ST	North	Single Post	2x2	Soil	Right	Steel	8/14/2014	Acceptable	43.875478	-116.504565
429	250	D3	N	Aluminum	Engineer Grade	Clear	Good	251	MURRAY AVE	6	32	7		0	0	7	TSJ	W FIRST ST	MURRAY AVE	East	Single Post	3in. Tube	Soil	Right	Steel	8/14/2014	Acceptable	43.874532	-116.504715
430	250	D3	N	Aluminum	Engineer Grade	Clear	Good	251	FIRST ST	6	32	7		0	0	7	TSJ	W FIRST ST	MURRAY AVE	East	Single Post	3in. Tube	Soil	Right	Steel	8/14/2014	Acceptable	43.874532	-116.504715
431	251	D3	N	Aluminum	Engineer Grade	Clear	Good	252	W 2ND ST	6	32	10		0	0	5	TSJ	MURRAY AVE	W 2ND ST	South	Single Post	2x2	Concrete	Right	Steel	8/14/2014	Acceptable	43.873644	-116.504712
432	251	D3	E	Aluminum	Engineer Grade	Clear	Good	252	MURRAY AVE	6	32	10		0	0	5	TSJ	MURRAY AVE	W 2ND ST	South	Single Post	2x2	Concrete	Right	Steel	8/14/2014	Acceptable	43.873644	-116.504712
433	252	D3	E	Aluminum	Engineer Grade	Clear	Good	253	MURRAY AVE	6	32	12		0	0	8	TSJ	W 3RD ST	MURRAY AVE	East	Single Post	2x2	Soil	Right	Steel	8/14/2014	Acceptable	43.872514	-116.504699
434	252	D3	E	Aluminum	Engineer Grade	Clear	Good	253	W 3RD ST	6	32	12		0	0	8	TSJ	W 3RD ST	MURRAY AVE	East	Single Post	2x2	Soil	Right	Steel	8/14/2014	Acceptable	43.872514	-116.504699
435	253	D3	E	Aluminum	Engineer Grade	Clear	Good	254	W 4TH ST	6	32	12		0	0	8	TSJ	MURRAY AVE	W 4TH ST	South	Single Post	2x2	Soil	Right	Steel	8/14/2014	Acceptable	43.871976	-116.504701
436	253	D3	E	Aluminum	Engineer Grade	Clear	Good	254	W 4TH ST	6	32	12		0	0	8	TSJ	MURRAY AVE	W 4TH ST	South	Single Post	2x2	Soil	Right	Steel	8/14/2014	Acceptable	43.871976	-116.504701
437	253	R1-1	E	Aluminum	Engineer Grade	Clear	Good	254	STOP	30	30	8		0	10	8	TSJ	MURRAY AVE	W 4TH ST	South	Single Post	2x2	Soil	Right	Steel	8/14/2014	Acceptable	43.871976	-116.504701
438	253	R7-1	E	Aluminum	Engineer Grade	Clear	Good	254	NO PARKING	18	24	7		0	0	8	TSJ	MURRAY AVE	W 4TH ST	South	Single Post	2x2	Soil	Right	Steel	8/14/2014	Acceptable	43.871976	-116.504701
439	254	R1-1	S	Aluminum	Engineer Grade	Clear	Good	255	STOP	30	30	7		0	10	5	TSJ	MURRAY AVE	4TH ST	North	Single Post	2x2	Soil	Right	Steel	8/14/2014	Acceptable	43.871849	-116.504548
440	255	D3	E	Aluminum	Engineer Grade	Clear	Good	259	MURRAY AVE	6	32	8		0	0	5	TSJ	MURRAY AVE	5TH ST	South	Single Post	2x2	Soil	Left	Steel	8/14/2014	Acceptable	43.871024	-116.504542
441	255	D3	E	Aluminum	Engineer Grade	Clear	Good	259	FIFTH ST	6	32	8		0	0	5	TSJ	MURRAY AVE	5TH ST	South	Single Post	2x2	Soil	Left	Steel	8/14/2014	Acceptable	43.871024	-116.504542
442	256	D3	E	Aluminum	Engineer Grade	Clear	Fair	256	WILLIAMS RD	6	32	6		0	0	5	TSJ	5TH ST	WILLIAMS RD	West	Single Post	2x2	Soil	Right	Steel	8/14/2014	Acceptable	43.871032	-116.50547
443	256	D3	E	Aluminum	Engineer Grade	Clear	Fair	256	W 5TH ST	6	32	6		0	0	5	TSJ	5TH ST	WILLIAMS RD	West	Single Post	2x2	Soil	Right	Steel	8/14/2014	Acceptable	43.871032	-116.50547
444	256	R1-1	E	Aluminum	Engineer Grade	Clear	Fair	256	STOP	24	24	6		0	10	5	TSJ	5TH ST	WILLIAMS RD	West	Single Post	2x2	Soil	Right	Steel	8/14/2014	Acceptable	43.871032	-116.50547
445	257	D3	E	Aluminum	Engineer Grade	Clear	Good	257	WILSON AVE	6	32	10		0	0	5	TSJ	WILSON AVE	4TH ST	South	Single Post	2x2	Soil	Right	Steel	8/14/2014	Acceptable	43.872009	-116.506081
446	257	D3	E	Aluminum	Engineer Grade	Clear	Good	257	4TH ST	6	32	10		0	0	5	TSJ	WILSON AVE	4TH ST	South	Single Post	2x2	Soil	Right	Steel	8/14/2014	Acceptable	43.872009	-116.506081
447	257	R1-1	E	Aluminum	Engineer Grade	Clear	Good	257	STOP	30	30	10		0	10	5	TSJ	WILSON AVE	4TH ST	South	Single Post	2x2	Soil	Right	Steel	8/14/2014	Acceptable	43.872009	-116.506081
448	258	D3	E	Aluminum	Engineer Grade	Clear	Good	258	W 3RD ST	6	32	12		0	0	3	TSJ	WILSON AVE	W 3RD ST	North	Single Post	2x2	Soil	Right	Steel	8/14/2014	Acceptable	43.872514	-116.505918
449	258	D3	E	Aluminum	Engineer Grade	Clear	Good	258	WILSON AVE	6	32	12		0	0	3	TSJ	WILSON AVE	W 3RD ST	North	Single Post	2x2	Soil	Right	Steel	8/14/2014	Acceptable	43.872514	-116.505918
450	259	D3	E	Aluminum	Engineer Grade	Clear	Good	260	WILSON AVE	6	32	12		0	0	3	TSJ	WILSON AVE	W 2ND ST	North	Single Post	2x2	Soil	Right	Steel	8/14/2014	Acceptable	43.873633	-116.505936
451	259	D3	E	Aluminum	Engineer Grade	Clear	Good	260	W 2ND ST	6	32	12		0	0	3	TSJ	WILSON AVE	W 2ND ST	North	Single Post	2x2	Soil	Right	Steel	8/14/2014	Acceptable	43.873633	-116.505936
452	260	D3	W	Aluminum	Engineer Grade	Bush Obscured	Good	261		6	32	8		0	0	6	TSJ	WILSON AVE	1ST ST	North	Single Post	2x2	Soil	Right	Steel	8/14/2014	Acceptable	43.874556	-116.505897
453	261	D3	W	Aluminum	Engineer Grade	Clear	Good	262	W MAIN ST	6	32	8		0	0	6	TSJ	WILSON AVE	W MAIN ST	North	Single Post	2x2	Soil	Right	Steel	8/14/2014	Acceptable	43.874964	-116.505939
454	261	D3	W	Aluminum	Engineer Grade	Clear	Good	262	WILSON AVE	6	32	8		0	0	6	TSJ	WILSON AVE	W MAIN ST	North	Single Post	2x2	Soil	Right	Steel	8/14/2014	Acceptable	43.874964	-116.505939
455	261	R1-1	W	Aluminum	Engineer Grade	Clear	Good	262	STOP	30	30	8		0	10	6	TSJ	WILSON AVE	W MAIN ST	North	Single Post	2x2	Soil	Right	Steel	8/14/2014	Acceptable	43.874964	-116.505939
456	262	W10-2	W	Aluminum	Engineer Grade	Tree Obscured	Replace	263		49	49	6		0	0	5	TSJ	W MAIN ST	MURRAY ST	West	Single Post	2x2	Soil	Right	Steel	8/14/2014	Acceptable	43.87563	-116.503962
457	262	R3-4	W	Aluminum	Engineer Grade	Clear	Good	263		24	24	6		0	0	5	TSJ	W MAIN ST	MURRAY ST	West	Single Post	2x2	Soil	Right	Steel	8/14/2014	Acceptable	43.87563	-116.503962
458	263	W10-2	W	Aluminum	Engineer Grade	Clear	Replace	264	TRACKS LEFT	49	49	6		0	0	5	TSJ	MAIN STAVE	WILSON AVE	East	Single Post	2x2	Soil	Right	Steel	8/14/2014	Acceptable	43.875182	-116.505575
459	264	D3	W	Aluminum	Engineer Grade	Clear	Good	265	W 2ND ST	6	32	8		0	0	6	TSJ	W 2ND ST	MCAULIFFE ST	West	Single Post	2x2	Soil	Right	Steel	8/14/2014	Acceptable	43.873654	-116.507256
460	264	D3	W	Aluminum	Engineer Grade	Partially Obscured	Good	265	MCAULIFFE	6	32	8		0	0	6	TSJ	W 2ND ST	MCAULIFFE ST	West	Single Post	2x2	Soil	Right	Steel	8/14/2014	Acceptable	43.873654	-116.507256
461	265	D3	W	Aluminum	Engineer Grade	Clear	Good	266		6	32	8		0	0	6	TSJ	MCAULIFFE AVE	W 3RD ST	North	Single Post	2x2	Soil	Right	Steel	8/14/2014	Acceptable	43.872523	-116.50726
462	265	D3	W	Aluminum	Engineer Grade	Clear	Good	266	W 3RD ST	6	32	8		0	0	6	TSJ	MCAULIFFE AVE	W 3RD ST	North	Single Post	2x2	Soil	Right	Steel	8/14/2014	Acceptable	43.872523	-116.50726
463	266	R7-13	W	Aluminum	Engineer Grade	Clear	Good	267	NO PARKING THIS SIDE OF STREET	18	24	4		0	3	4	TSJ	WILLIAMS RD	4TH ST	West	Single Post	2x2	Soil	Right	Steel	8/14/2014	Acceptable	43.871997	-116.505496
464	267	D3	W	Aluminum	Engineer Grade	Clear	Good	268	CANAL ST	6	36	10		0	0	4	TSJ	CANAL ST	W MAIN ST	North	Single Post	2x2	Soil	Right	Steel	8/14/2014	Acceptable	43.875661	-116.504932
465	267	D3	W	Aluminum	Engineer Grade	Clear	Good	268	W MAIN ST	6	32	10		0	0	4	TSJ	CANAL ST	W MAIN ST	North	Single Post	2x2	Soil	Right	Steel	8/14/2014	Acceptable	43.875661	-116.504932
466	267	R1-1	W	Aluminum	Engineer Grade	Clear	Good	268	STOP	30	30	10		0	10	4	TSJ	CANAL ST	W MAIN ST	North	Single Post	2x2	Soil	Right	Steel	8/14/2014	Acceptable	43.875661	-116.504932
467	268	W10-1	W	Aluminum	Engineer Grade	Clear	Poor	269		36	36	8		0	0	6	TSJ	CANAL ST	RR CROSSING	North-East	Single Post	2x2	Soil	Right	Steel	8/14/2014	Acceptable	43.876546	-116.504872
468	269	R1-1	W	Aluminum	Engineer Grade	Clear	Poor	270	STOP	30	30	7		0	10	6	TSJ	CANAL ST	RR CROSSING	North-East	Single Post	3in. Tube	Soil	Right	Steel	8/14/2014	Acceptable	43.876946	-116.504527
469	270	R1-1	W	Aluminum	Engineer Grade	Clear	Good	271	STOP	30	30	7		0	10	6	TSJ	CANAL ST	RR CROSSING	South-West	Single Post	3in. Tube	Soil	Right	Steel	8/14/2014	Acceptable	43.877145	-116.504448

Sign ID	Support ID	MUTCD	Facing	Backing	Face Material	Visibility	Sign Condition	Photo No.	Sign Text	Length (in)	Width (in)	Height (in)	Num. Text	Num. Size (in)	Text Size (in)	Offset (ft)	Inspector	Road Name	Location Desc.	Travel Direction	Post Type	Post Size	Post Base	Post Pos.	Post Mat'l.	Date Insp.	Post Rating	Latitude	Longitude
470	271	W10-1	W	Aluminum	Engineer Grade	Clear	Poor	272		36	36	8		0	0	6	TSJ	CANAL ST	RR CROSSING	West	Single Post	2x2	Soil	Right	Steel	8/14/2014	Acceptable	43.877273	-116.5041
471	272	D3	W	Aluminum	Engineer Grade	Clear	Good	273		6	32	8		0	0	5	TSJ	BOISE AVE	CANAL ST	South	Single Post	2x2	Soil	Right	Steel	8/14/2014	Acceptable	43.877318	-116.502866
472	272	D3	W	Aluminum	Engineer Grade	Clear	Good	273		6	32	8		0	0	5	TSJ	BOISE AVE	CANAL ST	South	Single Post	2x2	Soil	Right	Steel	8/14/2014	Acceptable	43.877318	-116.502866
473	272	R1-1	W	Aluminum	Engineer Grade	Clear	Good	273	STOP	30	30	8		0	10	5	TSJ	BOISE AVE	CANAL ST	South	Single Post	2x2	Soil	Right	Steel	8/14/2014	Acceptable	43.877318	-116.502866
474	273	R7-13	W	Aluminum	Engineer Grade	Clear	Good	274	NO PARKING THIS SIDE OF STREET	12	18	10		0	3	3	TSJ	CANAL ST	BOISE AVE	West	Single Post	2x2	Soil	Right	Steel	8/14/2014	Acceptable	43.877292	-116.502633
475	274	R7-13	W	Aluminum	Engineer Grade	Clear	Good	275	NO PARKING THIS SIDE OF STREET	12	18	10		0	3	8	TSJ	CANAL ST	N COMMERCIAL AVE	West	Single Post	2x2	Soil	Right	Steel	8/14/2014	Acceptable	43.8773	-116.501569
476	275	D3	W	Aluminum	Engineer Grade	Clear	Fair	276	CANAL ST	6	36	9		0	0	5	TSJ	N COMMERCIAL AVE	CANAL ST	South	Single Post	2x2	Soil	Right	Steel	8/14/2014	Acceptable	43.87732	-116.501516
477	275	D3	W	Aluminum	Engineer Grade	Clear	Fair	276	N COMMERCIAL AVE	6	36	8		0	0	5	TSJ	N COMMERCIAL AVE	CANAL ST	South	Single Post	2x2	Soil	Right	Steel	8/14/2014	Acceptable	43.87732	-116.501516
478	275	R1-1	W	Aluminum	Engineer Grade	Clear	Fair	276	STOP	30	30	8		0	10	5	TSJ	N COMMERCIAL AVE	CANAL ST	South	Single Post	2x2	Soil	Right	Steel	8/14/2014	Acceptable	43.87732	-116.501516
479	276	D3	W	Aluminum	Engineer Grade	Clear	Good	277	CANAL ST	6	32	10		0	0	5	TSJ	CANAL ST	WASHINGTON ST	East	Single Post	2x2	Soil	Right	Steel	8/14/2014	Acceptable	43.877439	-116.500269
480	276	D3	W	Aluminum	Engineer Grade	Clear	Good	277	WASHINGTON ST	6	32	10		0	0	5	TSJ	CANAL ST	WASHINGTON ST	East	Single Post	2x2	Soil	Right	Steel	8/14/2014	Acceptable	43.877439	-116.500269
481	276	R1-1	W	Aluminum	Engineer Grade	Clear	Good	277	STOP	36	36	10		0	10	5	TSJ	CANAL ST	WASHINGTON ST	East	Single Post	2x2	Soil	Right	Steel	8/14/2014	Acceptable	43.877439	-116.500269
482	277	R1-1	W	Aluminum	Engineer Grade	Clear	Fair	278	STOP	30	30	4		0	10	3	TSJ	DION ST	WASHINGTON AVE	East	Single Post	2x2	Portable	Right	Steel	8/14/2014	Acceptable	43.87815	-116.50024
483	278	D3	S	Aluminum	Engineer Grade	Clear	Good	279	N COMMERCIAL AVE	6	36	8		0	0	3	TSJ	N COMMERCIAL AVE	DION ST	South	Single Post	2x2	Soil	Right	Steel	8/14/2014	Acceptable	43.878287	-116.501507
484	278	D3	S	Aluminum	Engineer Grade	Clear	Good	279	DION ST	6	36	8		0	0	3	TSJ	N COMMERCIAL AVE	DION ST	South	Single Post	2x2	Soil	Right	Steel	8/14/2014	Acceptable	43.878287	-116.501507
485	279	D3	S	Aluminum	Engineer Grade	Clear	Good	280	DION ST	6	36	9		0	0	3	TSJ	BOISE AVE	DION ST	South	Single Post	2x2	Soil	Right	Steel	8/14/2014	Acceptable	43.878279	-116.502874
486	279	D3	S	Aluminum	Engineer Grade	Clear	Good	280	BOISE AVE	6	32	8		0	0	3	TSJ	BOISE AVE	DION ST	South	Single Post	2x2	Soil	Right	Steel	8/14/2014	Acceptable	43.878279	-116.502874
487	280	D3	S	Aluminum	Engineer Grade	Clear	Good	281	N BOISE AVE	6	32	8		0	0	3	TSJ	N BOISE AVE	MUSSER ST	North	Single Post	2x2	Soil	Right	Steel	8/14/2014	Acceptable	43.879053	-116.502748
488	280	D3	S	Aluminum	Engineer Grade	Clear	Good	281	MUSSER	6	32	8		0	0	3	TSJ	N BOISE AVE	MUSSER ST	North	Single Post	2x2	Soil	Right	Steel	8/14/2014	Acceptable	43.879053	-116.502748
489	280	R1-1	S	Aluminum	Engineer Grade	Clear	Good	281	STOP	30	30	8		0	10	3	TSJ	N BOISE AVE	MUSSER ST	North	Single Post	2x2	Soil	Right	Steel	8/14/2014	Acceptable	43.879053	-116.502748
490	281	R1-1	S	Aluminum	Engineer Grade	Clear	Good	282	STOP	30	30	10		0	10	3	TSJ	N BOISE AVE	MUSSER ST	South	Single Post	2x2	Concrete	Right	Steel	8/14/2014	Acceptable	43.879214	-116.502874
491	282	D3	S	Aluminum	Engineer Grade	Clear	Good	283	MUSSER ST	6	32	8		0	0	3	TSJ	COMMERCIAL AVE	MUSSER ST	South	Single Post	2x2	Concrete	Right	Steel	8/14/2014	Acceptable	43.879204	-116.501521
492	282	D3	S	Aluminum	Engineer Grade	Clear	Good	283	COMMERCIAL AVE	6	32	8		0	0	3	TSJ	COMMERCIAL AVE	MUSSER ST	South	Single Post	2x2	Concrete	Right	Steel	8/14/2014	Acceptable	43.879204	-116.501521
493	282	R1-1	S	Aluminum	Engineer Grade	Clear	Good	283	STOP	24	24	8		0	10	3	TSJ	COMMERCIAL AVE	MUSSER ST	South	Single Post	2x2	Concrete	Right	Steel	8/14/2014	Acceptable	43.879204	-116.501521
494	283	R1-1	S	Aluminum	Engineer Grade	Clear	Good	284	STOP	24	24	8		0	10	3	TSJ	COMMERCIAL AVE	MUSSER S	North	Single Post	2x2	Concrete	Right	Steel	8/14/2014	Acceptable	43.879063	-116.50139
495	284	R7-100	N	Aluminum	Engineer Grade	Clear	Good	285		18	24	5		0	0	3	TSJ	MUSSER ST	N WASHINGTON	East	Single Post	2x2	Soil	Right	Steel	8/14/2014	Acceptable	43.879107	-116.50066
496	285	R7-100	N	Aluminum	Engineer Grade	Clear	Good	286		18	24	5		0	0	5	TSJ	MUSSER ST	WASHINGTON AVE	East	Single Post	2x2	Soil	Right	Steel	8/14/2014	Acceptable	43.879102	-116.500329
497	286	R7-100	S	Aluminum	Engineer Grade	Clear	Good	287		18	24	5		0	0	5	TSJ	MUSSER ST	WASHINGTON ST	East	Single Post	2x2	Soil	Left	Steel	8/14/2014	Acceptable	43.87919	-116.500296
498	287	R7-100	S	Aluminum	Engineer Grade	Clear	Good	288		18	24	5		0	0	5	TSJ	MUSSER ST	WASHINGTON AVE	East	Single Post	2x2	Soil	Right	Steel	8/14/2014	Acceptable	43.879184	-116.500468
499	288	D3	S	Aluminum	Engineer Grade	Clear	Good	289	MUSSER ST	6	32	8		0	0	5	TSJ	MUSSER ST	WASHINGTON ST	East	Single Post	2x2	Soil	Right	Steel	8/14/2014	Acceptable	43.879088	-116.500192
500	288	D3	S	Aluminum	Engineer Grade	Clear	Good	289	WASHINGTON AVE	6	32	8		0	0	5	TSJ	MUSSER ST	WASHINGTON ST	East	Single Post	2x2	Soil	Right	Steel	8/14/2014	Acceptable	43.879088	-116.500192
501	288	R1-1	S	Aluminum	Engineer Grade	Clear	Fair	289	STOP	30	30	8		0	10	5	TSJ	MUSSER ST	WASHINGTON ST	East	Single Post	2x2	Soil	Right	Steel	8/14/2014	Acceptable	43.879088	-116.500192
502	289	D3	S	Aluminum	Engineer Grade	Clear	Good	290	BARTON ST	6	32	8		0	0	5	TSJ	BARTON ST	WASHINGTON AVE	East	Single Post	2x2	Soil	Right	Steel	8/14/2014	Acceptable	43.88007	-116.500197
503	289	D3	S	Aluminum	Engineer Grade	Clear	Good	290	WASHINGTON ST	6	32	8		0	0	5	TSJ	BARTON ST	WASHINGTON AVE	East	Single Post	2x2	Soil	Right	Steel	8/14/2014	Acceptable	43.88007	-116.500197
504	289	R1-1	S	Aluminum	Engineer Grade	Clear	Good	290	STOP	30	30	8		0	10	5	TSJ	BARTON ST	WASHINGTON AVE	East	Single Post	2x2	Soil	Right	Steel	8/14/2014	Acceptable	43.88007	-116.500197
505	290	R1-1	S	Aluminum	Engineer Grade	Clear	Good	291	STOP	30	30	10		0	10	3	TSJ	COMMERCIAL AVE	BARTON ST	North	Single Post	2x2	Soil	Right	Steel	8/14/2014	Acceptable	43.880052	-116.501399
506	291	D3	S	Aluminum	Engineer Grade	Clear	Good	292	COMMERCIAL AVE	6	32	8		0	0	3	TSJ	N COMMERCIAL AVE	BARTON ST	South	Single Post	2x2	Soil	Right	Steel	8/14/2014	Acceptable	43.880195	-116.501519
507	291	D3	S	Aluminum	Engineer Grade	Clear	Good	292	BARTON ST	6	32	8		0	0	3	TSJ	N COMMERCIAL AVE	BARTON ST	South	Single Post	2x2	Soil	Right	Steel	8/14/2014	Acceptable	43.880195	-116.501519
508	291	R1-1	S	Aluminum	Engineer Grade	Clear	Good	292	STOP	30	30	8		0	10	3	TSJ	N COMMERCIAL AVE	BARTON ST	South	Single Post	2x2	Soil	Right	Steel	8/14/2014	Acceptable	43.880195	-116.501519
509	292	D3	S	Aluminum	Engineer Grade	Clear	Good	293	BARTON ST	6	32	11		0	0	3	TSJ	BARTON ST	N BOISE AVE	West	Single Post	2x2	Soil	Right	Steel	8/14/2014	Acceptable	43.880183	-116.502756
510	292	D3	S	Aluminum	Engineer Grade	Clear	Good	293	N BOISE AVE	6	32	11		0	0	3	TSJ	BARTON ST	N BOISE AVE	West	Single Post	2x2	Soil	Right	Steel	8/14/2014	Acceptable	43.880183	-116.502756
511	293	OM-3R	S	Aluminum	Engineer Grade	Clear	Good	294		12	36	1		0	0	5	TSJ	BOISE AVE	BRIDGE	North	Single Post	4x4	Soil	Left	Wood	8/14/2014	Acceptable	43.881572	-116.502893
512	294	OM-3L	S	Aluminum	Engineer Grade	Clear	Good	295		12	36	1		0	0	5	TSJ	BOISE AVE	BRIDGE	South	Single Post	4x4	Soil	Right	Wood	8/14/2014	Acceptable	43.881675	-116.502969
513	295	OM-3R	S	Aluminum	Engineer Grade	Clear	Good	296		12	36	1		0	0	3	TSJ	BOISE AVE	BRIDGE	North-East	Single Post	Unknown	Soil	Right	Steel	8/14/2014	Acceptable	43.881696	-116.503012
514	296	OM-3L	S	Aluminum	Engineer Grade	Clear	Good	297		12	36	1		0	0	3	TSJ	BOISE AVE	BRIDGE	North-East	Single Post	Unknown	Soil	Right	Steel	8/14/2014	Acceptable	43.881764	-116.502975
515	297	D3	S	Aluminum	Engineer Grade	Clear	Good	298	CARSON ST	6	32	12		0	0	3	TSJ	N BOISE AVE	CARSON ST	South	Single Post	2x2	Soil	Right	Steel	8/14/2014	Acceptable	43.881164	-116.502873
516	297	D3	S	Aluminum	Engineer Grade	Clear	Good	298	BOISE AVE	6	32	12		0	0	3	TSJ	N BOISE AVE	CARSON ST	South	Single Post	2x2	Soil	Right	Steel	8/14/2014	Acceptable	43.881164	-116.502873
517	297	R1-1	S	Aluminum	Engineer Grade	Clear	Fair	298	STOP	30	30	12		0	10	3	TSJ	N BOISE AVE	CARSON ST	South	Single Post	2x2	Soil	Right	Steel	8/14/2014	Acceptable	43.881164	-116.502873
518	298	D3	S	Aluminum	Engineer Grade	Clear	Good	299	N COMMERCIAL AVE	6	32	12		0	0	5	TSJ	CARSON ST	N COMMERCIAL AVE	East	Single Post	2x2	Soil	Right	Steel	8/14/2014	Acceptable	43.88106	-116.501562
519	298	D3	S	Aluminum	Engineer Grade	Clear	Good	299	N COMMERCIAL AVE	3	32	12		0	0	5	TSJ	CARSON ST	N COMMERCIAL AVE	East	Single Post	2x2	Soil	Right	Steel	8/14/2014	Acceptable	43.88106	-116.501562
520	298	R1-1	S	Aluminum	Engineer Grade	Clear	Good	299	STOP	30	30	12		0	10	5	TSJ	CARSON ST	N COMMERCIAL AVE	East	Single Post	2x2	Soil	Right	Steel	8/14/2014	Acceptable	43.88106	-116.501562
521	298	R1-4	S	Aluminum	Engineer Grade	Clear	Good	299		9	18	8		0	0	5	TSJ	CARSON ST	N COMMERCIAL AVE	East	Single Post	2x2	Soil	Right	Steel	8/14/2014	Acceptable	43.88106	-116.501562
522	299	R1-1	S	Aluminum	Engineer Grade	Tree Obscured	Good	300	STOP	30	30	8		0	10	5	TSJ	COMMERCIAL AVE	CARSON ST	North	Single Post	2x2	Soil	Right	Steel	8/14/2014	Acceptable	43.881048	-116.501411
523	299	R1-4	S	Aluminum	Engineer Grade	Tree Obscured	Good	300		9	18	6		0	0	5	TSJ	COMMERCIAL AVE	CARSON ST	North	Single Post	2x2	Soil	Right	Steel	8/14/2014	Acceptable	43.881048	-116.501411
524	300	R1-1	S	Aluminum	Engineer Grade	Clear	Good	301	STOP	30	30	8		0	10	5	TSJ	CARSON ST	COMMERCIAL AVE	West	Single Post	2x2	Soil	Right	Steel	8/14/2014	Acceptable	43.881144	-116.501352
525	300	R1-4	S	Aluminum	Engineer Grade	Clear	Good	301		9	18	6		0	0	5	TSJ	CARSON ST	COMMERCIAL AVE	West	Single Post	2x2	Soil	Right	Steel	8/14/2014	Acceptable	43.881144	-116.501352
526	301	R1-1	S	Aluminum	Engineer Grade	Partially Obscured	Good	302	STOP	30	30	8		0	10	5	TSJ	COMMERCIAL AVE	CARSON	South	Single Post	2x2	Soil	Right	Steel	8/14/2014	Acceptable	43.881176	-116.501528
527	301	R1-4	S	Aluminum	Engineer Grade	Clear	Good	302		9	18	8		0	0	5	TSJ	COMMERCIAL AVE	CARSON	South	Single Post	2x2	Soil	Right	Steel	8/14/2014	Acceptable	43.881176	-116.501528
528	302	D3	S	Aluminum	Engineer Grade	Clear	Good	303	OXLEY	6	36	9		0	0	5	TSJ	N COMMERCIAL AVE	OXLEY ST	North	Single Post	2x2	Soil	Right	Steel	8/14/2014	Acceptable	43.881741	-116.501405
529	302	D3	S	Aluminum	Engineer Grade	Clear	Good	303	N COMMERCIAL AVE	6	32	9		0	0	5	TSJ	N COMMERCIAL AVE	OXLEY ST	North	Single Post	2x2	Soil	Right	Steel	8/14/2014	Acceptable	43.881741	-116.501405
530	303	D3	S	Aluminum	Engineer Grade	Clear	Good	304	N WASHINGTON AVE	6	36	10		0	0	5	TSJ	CARSON ST	N WASHINGTON AVE	East	Single Post	2x2	Soil	Right	Steel	8/14/2014	Acceptable	43.88105	-116.500245
531	303	D3	S	Aluminum	Engineer Grade	Clear	Good	304	CARSON ST	6	36	10		0	0	5	TSJ	CARSON ST	N WASHINGTON AVE	East	Single Post	2x2	Soil	Right	Steel	8/14/2014	Acceptable	43.88105	-116.500245
532	303	R1-1	S	Aluminum	Engineer Grade	Clear	Good	304	STOP	30	30	10		0	10	5	TSJ	CARSON ST	N WASHINGTON AVE	East	Single Post	2x2	Soil	Right	Steel	8/14/2014	Acceptable	43.88105	-116.500245
533	304	D3	S	Aluminum	Engineer Grade	Clear	Good	305	N WASHINGTON AVE	6	36	8		0	0	5	TSJ	DION ST	N WASHINGTON AVE	West	Single Post	2x2	Soil	Right	Steel	8/14/2014	Acceptable	43.87824	-116.499925
534	304	D3	S	Aluminum	Engineer Grade	Clear	Good	305	DION	6	24	8		0	0	5	TSJ	DION ST	N WASHINGTON AVE	West	Single Post	2x2	Soil	Right	Steel	8/14/2014	Acceptable	43.87824	-116.499925
535	304	R1-1	S	Aluminum	Engineer Grade	Clear	Good	305	STOP	30	30	8		0	10	5	TSJ	DION ST	N WASHINGTON AVE	West	Single Post	2x2	Soil	Right	Steel	8/14/2014	Acceptable	43.87824	-116.499925
536	305	D3	S	Aluminum	Engineer Grade	Clear	Replace	306	HAYS	6	32	8		0	0	5	TSJ	DION ST	W HAYS	East	Single Post	3in. Tube	Concrete	Left	Steel	8/14/2014	Acceptable	43.878277	-116.498626
537	305	D3	S	Aluminum	Engineer Grade	Clear	Replace	306	DION ST	6	36	8		0	0	5	TSJ	DION ST	W HAYS	East	Single Post	3in. Tube	Concrete	Left	Steel	8/14/2014	Acceptable	43.878277	-116.498626
538	306	D3	S	Aluminum	Engineer Grade	Clear	Good	307	N WARDWELL	6	32	8		0	0	8	TSJ	DION ST	N WARDWELL	East	Single Post	2x2	Soil	Right	Steel	8/14/2014	Acceptable	43.878165	-116.497901
539	306	D3	S	Aluminum	Engineer Grade	Clear	Good	307	DION ST	6	32	8		0	0	8	TSJ	DION ST	N WARDWELL	East	Single Post	2x2	Soil	Right	Steel	8/14/2014	Acceptable	43.878165	-116.497901
540	306	R1-1	S	Aluminum	Engineer Grade	Clear	Good	307	STOP	30	30	8		0	10	8	TSJ	DION ST	N WARDWELL	East	Single Post	2x2	Soil	Right	Steel	8/14/2014	Acceptable	43.878165	-116.497901
541	307	D3	S	Aluminum	Engineer Grade	Clear	Good	308	WARDWELL	6	32	12		0	0	8	TSJ	WARDWELL AVE	RIVERESIDE ST	North	Single Post	3in. Tube	Soil	Right	Steel	8/14/2014	Acceptable	43.880625	-116.497667
542	307	D3	S	Aluminum	Engineer Grade	Clear	Good	308	RIVERSIDE DR	6	32	12		0	0	8	TSJ	WARDWELL AVE	RIVERESIDE ST	North	Single Post	3in. Tube	Soil	Right	Steel	8/14/2014	Acceptable	43.880625	-116.497667
543	308	W14-1	S	Aluminum	Engineer Grade	Clear	Fair	309		41	41	6		0	0	6	TSJ	RIVERSIDE ST	N WARDWELL AVE	East	Single Post	3in. Tube	Soil	Right	Steel	8/14/2014	Acceptable	43.880489	-116.497551
544	308	R16-X12	S	Aluminum	Engineer Grade	Clear	Good	309	BRIDGE CLOSED TO VEHICULAR TRAFFIC	24	42	4		0	0	6	TSJ	RIVERSIDE ST	N WARDWELL AVE	East	Single Post	3in. Tube	Soil	Right	Steel	8/14/2014	Acceptable	43.880489	-116.497551
545	309	R5-1A	S	Aluminum	Engineer Grade	Clear	Fair	310		24	30	8		0	0	6	TSJ	RIVERSIDE ST	WALNUT AVE	West	Single Post	2x2	Soil	Right	Steel	8/14/2014	Acceptable	43.880292	-116.496585
546	310	D3	S	Aluminum	Engineer Grade	Clear	Good	311	WALNUT	6	36	12		0	0	6	TSJ	WALNUT AVE	RIVERSIDE ST	North	Single Post	2x2	Soil	Center	Steel	8/14/2014	Acceptable	43.880201	-116.496387
547	310	D3	S	Aluminum	Engineer Grade	Clear	Good	311	RIVERSIDE ST	6	36	12		0	0	6	TSJ	WALNUT AVE	RIVERSIDE ST	North	Single Post	2x2	Soil	Center	Steel	8/14/2014	Acceptable	43.880201	-116.496387
548	310	R3-2	S	Aluminum	Engineer Grade	Clear	Fair	311		30	30	12		0	0	6	TSJ	WALNUT AVE	RIVERSIDE ST	North	Single Post	2x2	Soil	Center	Steel	8/14/2014	Acceptable	43.880201	-116.496387

Sign ID	Support ID	MUTCD	Facing	Backing	Face Material	Visibility	Sign Condition	Photo No.	Sign Text	Length (in)	Width (in)	Height (in)	Num. Text	Num. Size (in)	Text Size (in)	Offset (ft)	Inspector	Road Name	Location Desc.	Travel Direction	Post Type	Post Size	Post Base	Post Pos.	Post Mat'l.	Date Insp.	Post Rating	Latitude	Longitude
549	310	R6-2R	S	Aluminum	Engineer Grade	Clear	Fair	311		18	24	12		0	0	6	TSJ	WALNUT AVE	RIVERSIDE ST	North	Single Post	2x2	Soil	Center	Steel	8/14/2014	Acceptable	43.880201	-116.496387
550	311	R2-1-20	S	Aluminum	Engineer Grade	Clear	Poor	312		18	24	11		0	0	6	TSJ	WALNUT AVE	RIVERSIDE ST	East	Single Post	Unknown	Soil	Right	Steel	8/14/2014	Acceptable	43.880071	-116.495825
551	312	R5-1A	S	Aluminum	Engineer Grade	Clear	Fair	313		24	36	6		0	0	6	TSJ	RIVERSIDE ST	MONROE	East	Single Post	2x2	Soil	Right	Steel	8/14/2014	Acceptable	43.879938	-116.494628
552	313	R5-1	S	Aluminum	Engineer Grade	Clear	Fair	314		30	30	8		0	0	3	TSJ	RIVERSIDE ST	MONROE ST	South-West	Single Post	2x2	Soil	Right	Steel	8/14/2014	Acceptable	43.879995	-116.494425
553	314	D3	S	Aluminum	Engineer Grade	Clear	Good	315	RIVERSIDE ST	6	32	8		0	0	3	TSJ	RIVERSIDE ST	MONROE ST	East	Single Post	2x2	Soil	Right	Steel	8/14/2014	Acceptable	43.87992	-116.49452
554	314	D3	S	Aluminum	Engineer Grade	Clear	Good	315	MONROE ST	6	32	8		0	0	3	TSJ	RIVERSIDE ST	MONROE ST	East	Single Post	2x2	Soil	Right	Steel	8/14/2014	Acceptable	43.87992	-116.49452
555	314	R6-1L	S	Aluminum	Engineer Grade	Clear	Good	315		12	36	8		0	0	3	TSJ	RIVERSIDE ST	MONROE ST	East	Single Post	2x2	Soil	Right	Steel	8/14/2014	Acceptable	43.87992	-116.49452
556	315	R16-X12	S	Aluminum	Engineer Grade	Clear	Good	316	FOOT TRAFFIC ABSOLUTELY NO MOTORIZED VEHICLE TRAFFIC ALLOWED ON BRIDGE	24	24	3		0	0	15	TSJ	RIVERSIDE ST	BRIDGE	East	Single Post	Unknown	Soil	Right	Steel	8/14/2014	Acceptable	43.88011	-116.493214
557	316	R16-X12	S	Aluminum	Engineer Grade	Clear	Good	315	FOOT TRAFFIC ABSOLUTELY NO MOTORIZED VEHICLE TRAFFIC ALLOWED ON BRIDGE	24	24	3		0	0	50	TSJ	RIVERSIDE ST	BRIDGE	West	Single Post	Unknown	Soil	Right	Steel	8/14/2014	Acceptable	43.880008	-116.493035
558	317	R2-1-20	S	Aluminum	Engineer Grade	Clear	Good	318		18	24	15		0	0	5	TSJ	MONROE ST	WALNUT AVE	South	Single Post	2x2	Soil	Right	Steel	8/14/2014	Repair	43.879485	-116.494956
559	318	R5-1A	S	Aluminum	Engineer Grade	Clear	Good	319		24	36	8		0	0	5	TSJ	MONROE	WALNUT AVE	East	Single Post	2x2	Soil	Left	Steel	8/14/2014	Acceptable	43.879331	-116.496651
560	319	D3	S	Aluminum	Engineer Grade	Clear	Good	319	MONROE ST	6	32	12		0	0	5	TSJ	MONROE ST	WALNUT AVE	West	Single Post	2x2	Concrete	Right	Steel	8/14/2014	Acceptable	43.879325	-116.496837
561	319	D3	S	Aluminum	Engineer Grade	Clear	Good	319	WALNUT AVE	6	32	12		0	0	5	TSJ	MONROE ST	WALNUT AVE	West	Single Post	2x2	Concrete	Right	Steel	8/14/2014	Acceptable	43.879325	-116.496837
562	319	R1-1	S	Aluminum	Engineer Grade	Clear	Good	320	STOP	24	24	12		0	10	5	TSJ	MONROE ST	WALNUT AVE	West	Single Post	2x2	Concrete	Right	Steel	8/14/2014	Acceptable	43.879325	-116.496837
563	320	R5-1	N	Aluminum	Engineer Grade	Clear	Poor	321		30	30	8		0	0	3	TSJ	MONROE ST	WALNUT AVE	East	Single Post	2x2	Soil	Right	Steel	8/14/2014	Acceptable	43.879263	-116.496868
564	321	R1-1	N	Aluminum	Engineer Grade	Clear	Good	322	STOP	30	30	8		0	10	5	TSJ	WALNUT AVE	RIVERSIDE ST	North	Single Post	2x2	Soil	Right	Steel	8/14/2014	Acceptable	43.880095	-116.496321
565	322	R3-1	N	Aluminum	Engineer Grade	Clear	Good	323		24	24	8		0	0	5	TSJ	WALNUT AVE	MONROE ST	North	Single Post	2x2	Soil	Right	Steel	8/14/2014	Acceptable	43.879247	-116.496966
566	323	D3	N	Aluminum	Engineer Grade	Clear	Good	324	N WARDWELL	6	36	11		0	0	5	TSJ	WALNUT	WARDWELL	South-East	Single Post	2x2	Concrete	Right	Steel	8/14/2014	Acceptable	43.878432	-116.497658
567	323	D3	N	Aluminum	Engineer Grade	Clear	Good	324	WALNUT	6	32	12		0	0	5	TSJ	WALNUT	WARDWELL	South-East	Single Post	2x2	Concrete	Right	Steel	8/14/2014	Acceptable	43.878432	-116.497658
568	323	R1-1	N	Aluminum	Engineer Grade	Clear	Good	324	STOP	30	30	12		0	10	5	TSJ	WALNUT	WARDWELL	South-East	Single Post	2x2	Concrete	Right	Steel	8/14/2014	Acceptable	43.878432	-116.497658
569	324	D3	N	Aluminum	Engineer Grade	Clear	Good	325	N WASHINGTON AVE	6	32	11		0	0	5	TSJ	RIVERSIDE ST	WASHINGTON AVE	West	Single Post	2x2	Soil	Right	Steel	8/14/2014	Acceptable	43.881134	-116.500025
570	324	D3	N	Aluminum	Engineer Grade	Clear	Good	325	RIVERSIDE ST	6	32	11		0	0	5	TSJ	RIVERSIDE ST	WASHINGTON AVE	West	Single Post	2x2	Soil	Right	Steel	8/14/2014	Acceptable	43.881134	-116.500025
571	324	R1-1	N	Aluminum	Engineer Grade	Clear	Good	325	STOP	30	30	11		0	10	5	TSJ	RIVERSIDE ST	WASHINGTON AVE	West	Single Post	2x2	Soil	Right	Steel	8/14/2014	Acceptable	43.881134	-116.500025
572	325	D3	N	Aluminum	Engineer Grade	Clear	Good	326	N HAYS AVE	6	32	8		0	0	12	TSJ	MUSSER ST	N HAYS AVE	East	Single Post	2x2	Soil	Center	Steel	8/14/2014	Acceptable	43.879133	-116.498661
573	325	D3	N	Aluminum	Engineer Grade	Clear	Good	326	MUSSER ST	6	32	9		0	0	12	TSJ	MUSSER ST	N HAYS AVE	East	Single Post	2x2	Soil	Center	Steel	8/14/2014	Acceptable	43.879133	-116.498661
574	326	R1-1	N	Aluminum	Engineer Grade	Clear	Good	326	STOP	30	30	8		0	10	5	TSJ	MUSSER	N WASHINGTON	West	Single Post	2x2	Soil	Right	Steel	8/14/2014	Acceptable	43.879175	-116.499925
575	327	R1-1	N	Aluminum	Engineer Grade	Clear	Good	328	STOP	30	30	10		0	10	5	TSJ	BOISE AVE	W MAIN ST	North	Single Post	2x2	Soil	Right	Steel	8/14/2014	Acceptable	43.875483	-116.502672
576	327	D3	N	Aluminum	Engineer Grade	Clear	Good	328	BOISE AVE	6	32	10		0	0	5	TSJ	BOISE AVE	W MAIN ST	North	Single Post	2x2	Soil	Right	Steel	8/14/2014	Acceptable	43.875483	-116.502672
577	327	D3	N	Aluminum	Engineer Grade	Clear	Good	328	W MAIN	6	32	10		0	0	5	TSJ	BOISE AVE	W MAIN ST	North	Single Post	2x2	Soil	Right	Steel	8/14/2014	Acceptable	43.875483	-116.502672
578	328	D3	N	Aluminum	Engineer Grade	Clear	Good	329	W FIRST ST	6	32	6		0	0	5	TSJ	S BOISE AVE	W FIRST ST	South	Single Post	2x2	Soil	Right	Steel	8/14/2014	Acceptable	43.874651	-116.502845
579	328	D3	N	Aluminum	Engineer Grade	Clear	Good	329	S BOISE AVE	6	32	6		0	0	5	TSJ	S BOISE AVE	W FIRST ST	South	Single Post	2x2	Soil	Right	Steel	8/14/2014	Acceptable	43.874651	-116.502845
580	329	D3	N	Aluminum	Engineer Grade	Clear	Good	330	S BOISE AVE	6	32	8		0	0	5	TSJ	W 1ST ST	S BOISE AVE	West	Single Post	2x2	Soil	Right	Steel	8/14/2014	Acceptable	43.874634	-116.50263
581	329	D3	N	Aluminum	Engineer Grade	Clear	Good	330	W 1ST ST	6	32	8		0	0	5	TSJ	W 1ST ST	S BOISE AVE	West	Single Post	2x2	Soil	Right	Steel	8/14/2014	Acceptable	43.874634	-116.50263
582	329	R1-2	N	Aluminum	Engineer Grade	Clear	Good	330		30	30	8		0	0	5	TSJ	W 1ST ST	S BOISE AVE	West	Single Post	2x2	Soil	Right	Steel	8/14/2014	Acceptable	43.874634	-116.50263
583	330	R1-1	N	Aluminum	Engineer Grade	Clear	Fair	331	STOP	30	30	8		0	10	3	TSJ	S BOISE AVE	W 2ND ST	South	Single Post	2x2	Soil	Right	Steel	8/14/2014	Acceptable	43.8737	-116.502833
584	331	D3	N	Aluminum	Engineer Grade	Clear	Good	332	S BOISE AVE	6	32	8		0	0	8	TSJ	S BOISE AVE	W 2ND ST	South	Single Post	2x2	Soil	Right	Steel	8/14/2014	Acceptable	43.873537	-116.502678
585	331	D3	N	Aluminum	Engineer Grade	Clear	Good	332	W 2ND ST	6	32	8		0	0	8	TSJ	S BOISE AVE	W 2ND ST	South	Single Post	2x2	Soil	Right	Steel	8/14/2014	Acceptable	43.873537	-116.502678
586	331	R1-1	N	Aluminum	Engineer Grade	Clear	Good	332	STOP	30	30	8		0	10	8	TSJ	S BOISE AVE	W 2ND ST	South	Single Post	2x2	Soil	Right	Steel	8/14/2014	Acceptable	43.873537	-116.502678
587	332	D3	N	Aluminum	Engineer Grade	Clear	Good	333	3RD ST	6	32	11		0	0	5	TSJ	3RD ST	S BOISE AVE	West	Single Post	2x2	Soil	Right	Steel	8/14/2014	Acceptable	43.872683	-116.502665
588	332	D3	N	Aluminum	Engineer Grade	Clear	Good	333	S BOISE AVE	6	32	11		0	0	5	TSJ	3RD ST	S BOISE AVE	West	Single Post	2x2	Soil	Right	Steel	8/14/2014	Acceptable	43.872683	-116.502665
589	333	R1-1	N	Aluminum	Engineer Grade	Clear	Good	334	STOP	30	30	9		0	10	5	TSJ	S BOISE AVE	W 4TH ST	South	Single Post	2x2	Soil	Right	Steel	8/14/2014	Acceptable	43.872018	-116.502829
590	334	D3	N	Aluminum	Engineer Grade	Clear	Good	335	W 4TH ST	6	32	9		0	0	5	TSJ	BOISE AVE	W 4TH ST	South	Single Post	2x2	Soil	Right	Steel	8/14/2014	Acceptable	43.871846	-116.502632
591	334	D3	N	Aluminum	Engineer Grade	Clear	Good	335	BOISE AVE	6	32	9		0	0	5	TSJ	BOISE AVE	W 4TH ST	South	Single Post	2x2	Soil	Right	Steel	8/14/2014	Acceptable	43.871846	-116.502632
592	334	R1-1	N	Aluminum	Engineer Grade	Clear	Good	335	STOP	30	30	9		0	10	5	TSJ	BOISE AVE	W 4TH ST	South	Single Post	2x2	Soil	Right	Steel	8/14/2014	Acceptable	43.871846	-116.502632
593	335	R2-1-25	E	Aluminum	Engineer Grade	Clear	Fair	336		18	24	7		0	0	8	TSJ	BOISE AVE	W 4 TH ST	South	Single Post	2x2	Soil	Right	Steel	8/14/2014	Acceptable	43.871697	-116.502811
594	336	D3	E	Aluminum	Engineer Grade	Clear	Replace	337	S BOISE AVE	6	32	8		0	0	5	TSJ	FIFTH ST	S BOISE AVE	West	Single Post	3in. Tube	Soil	Right	Steel	8/14/2014	Acceptable	43.870975	-116.50259
595	336	D3	E	Aluminum	Engineer Grade	Clear	Replace	337	FIFTH ST	6	32	8		0	0	5	TSJ	FIFTH ST	S BOISE AVE	West	Single Post	3in. Tube	Soil	Right	Steel	8/14/2014	Acceptable	43.870975	-116.50259
596	336	R1-1	E	Aluminum	Engineer Grade	Clear	Fair	337	STOP	24	24	8		0	10	5	TSJ	FIFTH ST	S BOISE AVE	West	Single Post	3in. Tube	Soil	Right	Steel	8/14/2014	Acceptable	43.870975	-116.50259
597	337	D3	E	Aluminum	Engineer Grade	Clear	Replace	338	S BOISE AVE	6	32	8		0	0	5	TSJ	SIXTH AVE	S BOISE AVE	West	Single Post	3in. Tube	Soil	Right	Steel	8/14/2014	Acceptable	43.869937	-116.502564
598	337	D3	E	Aluminum	Engineer Grade	Clear	Replace	338	SIXTH AVE	6	32	8		0	0	5	TSJ	SIXTH AVE	S BOISE AVE	West	Single Post	3in. Tube	Soil	Right	Steel	8/14/2014	Acceptable	43.869937	-116.502564
599	337	R1-1	E	Aluminum	Engineer Grade	Clear	Fair	338	STOP	24	24	8		0	10	5	TSJ	SIXTH AVE	S BOISE AVE	West	Single Post	3in. Tube	Soil	Right	Steel	8/14/2014	Acceptable	43.869937	-116.502564
600	338	D3	E	Aluminum	Engineer Grade	Clear	Replace	339	S BOISE AVE	6	32	8		0	0	5	TSJ	TENTH ST	S BOISE AVE	West	Single Post	3in. Tube	Soil	Right	Steel	8/14/2014	Acceptable	43.866524	-116.502639
601	338	D3	E	Aluminum	Engineer Grade	Clear	Replace	339	TENTH ST	6	32	8		0	0	5	TSJ	TENTH ST	S BOISE AVE	West	Single Post	3in. Tube	Soil	Right	Steel	8/14/2014	Acceptable	43.866524	-116.502639
602	338	R1-1	E	Aluminum	Engineer Grade	Clear	Good	339	STOP	30	30	8		0	10	5	TSJ	TENTH ST	S BOISE AVE	West	Single Post	3in. Tube	Soil	Right	Steel	8/14/2014	Acceptable	43.866524	-116.502639
603	339	W11-1	E	Aluminum	Engineer Grade	Clear	Good	340		41	41	8		0	0	5	TSJ	BOISE AVE	W 12TH ST	South	Single Post	2x2	Soil	Right	Steel	8/14/2014	Acceptable	43.865415	-116.502792
604	340	R2-1-25	E	Aluminum	Engineer Grade	Clear	Good	341		18	24	12		0	0	5	TSJ	S BOISE AVE	W 12TH ST	North	Single Post	2x2	Soil	Right	Steel	8/14/2014	Acceptable	43.865024	-116.502675
605	341	D3	E	Aluminum	Engineer Grade	Clear	Good	342	BOISE AVE	6	32	8		0	0	5	TSJ	BOISE AVE	W 12TH ST	South	Single Post	2x2	Soil	Right	Steel	8/14/2014	Acceptable	43.864734	-116.502814
606	341	D3	E	Aluminum	Engineer Grade	Clear	Good	342	W 12TH ST	6	32	8		0	0	5	TSJ	BOISE AVE	W 12TH ST	South	Single Post	2x2	Soil	Right	Steel	8/14/2014	Acceptable	43.864734	-116.502814
607	341	R1-1	E	Aluminum	Engineer Grade	Clear	Good	342	STOP	30	30	8		0	10	5	TSJ	BOISE AVE	W 12TH ST	South	Single Post	2x2	Soil	Right	Steel	8/14/2014	Acceptable	43.864734	-116.502814
608	342	D3	E	Aluminum	Engineer Grade	Clear	Good	343	COMMERCIAL AVE	6	32	8		0	0	5	TSJ	S COMMERCIAL AVE	W 12TH ST	South	Single Post	2x2	Soil	Right	Steel	8/14/2014	Acceptable	43.864691	-116.50144
609	342	D3	E	Aluminum	Engineer Grade	Clear	Good	343	W 12TH ST	6	32	8		0	0	5	TSJ	S COMMERCIAL AVE	W 12TH ST	South	Single Post	2x2	Soil	Right	Steel	8/14/2014	Acceptable	43.864691	-116.50144
610	342	R1-1	E	Aluminum	Engineer Grade	Clear	Good	343	STOP	24	24	8		0	10	5	TSJ	S COMMERCIAL AVE	W 12TH ST	South	Single Post	2x2	Soil	Right	Steel	8/14/2014	Acceptable	43.864691	-116.50144
611	343	W11-1	E	Aluminum	Engineer Grade	Clear	Good	344		41	41	9		0	0	3	TSJ	S COMMERCIAL AVE	W 12TH ST	South	Single Post	2x2	Soil	Right	Steel	8/14/2014	Acceptable	43.865371	-116.501416
612	344	W9-11	E	Aluminum	Engineer Grade	Clear	Good	345	DEAF CHILD PLAYING	18	24	7		0	0	6	TSJ	COMMERCIAL AVE	TENTH ST	North	Single Post	2x2	Concrete	Right	Steel	8/14/2014	Acceptable	43.866275	-116.501305
613	345	R1-1	E	Aluminum	Engineer Grade	Clear	Good	346	STOP	30	30	6		0	10	6	TSJ	COMMERCIAL ST	TENTH ST	North	Single Post	2x2	Concrete	Right	Steel	8/14/2014	Acceptable	43.86642	-116.501303
614	346	D3	E	Aluminum	Engineer Grade	Clear	Good	347	COMMERCIAL ST	6	32	8		0	0	6	TSJ	COMMERCIAL ST	TENTH ST	South	Single Post	2x2	Soil	Right	Steel	8/14/2014	Acceptable	43.866561	-116.501432
615	346	D3	E	Aluminum	Engineer Grade	Clear	Good	347	TENTH ST	6	32	8		0	0	6	TSJ	COMMERCIAL ST	TENTH ST	South	Single Post	2x2	Soil	Right	Steel	8/14/2014	Acceptable	43.866561	-116.501432
616	347	R2-1-20	E	Aluminum	Engineer Grade	Tree Obscured	Good	348		18	24	8		0	0	6	TSJ	COMMERCIAL ST	10TH ST	North	Single Post	3in. Tube	Soil	Right	Steel	8/14/2014	Acceptable	43.867171	-116.501295
617	348	D3	S	Aluminum	Engineer Grade	Clear	Good	349	SIXTH ST	6	32	10		0	0	6	TSJ	SIXTH ST	COMMERCIAL AVE	East	Single Post	2x2	Soil	Right	Steel	8/14/2014	Acceptable	43.869789	-116.501474
618	348	D3	S	Aluminum	Engineer Grade	Clear	Good	349	S COMMERCIAL AVE	6	32	10		0	0	6	TSJ	SIXTH ST	COMMERCIAL AVE	East	Single Post	2x2	Soil	Right	Steel	8/14/2014	Acceptable	43.869789	-116.501474
619	341	R1-4	S	Aluminum	Engineer Grade	Clear	Good	342		9	18	8		0	0	5	TSJ	BOISE AVE	W 12TH ST	South	Single Post	2x2	Soil	Right	Steel	8/14/2014	Acceptable	43.864734	-116.502814
620	349	D3	S	Aluminum	Engineer Grade	Clear	Good	350	S COMMERCIAL AVE	6	32	9		0	0	6	TSJ	S COMMERCIAL AVE	W FIFTH ST	South	Single Post	2x2	Soil	Right	Steel	8/14/2014	Acceptable	43.870968	-116.501492
621	349	D3	S	Aluminum	Engineer Grade	Clear	Good	350	W FIFTH ST	6	32	8		0	0	6	TSJ	S COMMERCIAL AVE	W FIFTH ST	South	Single Post	2x2	Soil	Right	Steel	8/14/2014	Acceptable	43.870968	-116.501492
622	350	R1-1	S	Aluminum	Engineer Grade	Clear	Good	351	STOP	30	30	9		0	10	5	TSJ	S COMMERCIAL AVE	W 4TH ST	North	Single Post	2x2	Soil	Right	Steel	8/14/2014	Acceptable	43.87184	-116.501306
623	351	D3	S	Aluminum	Engineer Grade	Clear	Good	352	S COMMERCIAL AVE	6	36	9		0	0	5	TSJ	S COMMERCIAL AVE	W 4TH ST	South	Single Post	2x2	Soil	Right	Steel	8/14/2014	Acceptable	43.872031	-116.501494
624	351	D3	S	Aluminum	Engineer Grade	Clear	Good	352	W 4TH ST	6	32	8		0	0	5	TSJ	S COMMERCIAL AVE	W 4TH ST	South	Single Post	2x2	Soil	Right	Steel	8/14/2014	Acceptable	43.872031	-116.501494

Sign ID	Support ID	MUTCD	Facing	Backing	Face Material	Visibility	Sign Condition	Photo No.	Sign Text	Length (in)	Width (in)	Height (in)	Num. Text	Num. Size (in)	Text Size (in)	Offset (ft)	Inspector	Road Name	Location Desc.	Travel Direction	Post Type	Post Size	Post Base	Post Pos.	Post Mat'l.	Date Insp.	Post Rating	Latitude	Longitude
625	351	R1-1	S	Aluminum	Engineer Grade	Clear	Good	352	STOP	30	30	8		0	10	5	TSJ	S COMMERCIAL AVE	W 4TH ST	South	Single Post	2x2	Soil	Right	Steel	8/14/2014	Acceptable	43.872031	-116.501494
626	352	R1-1	S	Aluminum	Engineer Grade	Clear	Good	353	STOP	30	30	8		0	10	5	TSJ	W 3RD ST	S COMMERCIAL AVE	East	Single Post	2x2	Soil	Right	Steel	8/14/2014	Acceptable	43.872526	-116.501518
627	353	R1-1	S	Aluminum	Engineer Grade	Clear	Good	354	STOP	30	30	8		0	10	5	TSJ	S COMMERCIAL ST	W 3RD ST	West	Single Post	2x2	Soil	Right	Steel	8/14/2014	Acceptable	43.872654	-116.501256
628	354	D3	S	Aluminum	Engineer Grade	Clear	Good	355	S COMMERCIAL ST	6	32	8		0	0	5	TSJ	S COMMERCIAL ST	W 3RD ST	South	Single Post	2x2	Soil	Right	Steel	8/14/2014	Acceptable	43.872674	-116.501515
629	354	D3	S	Aluminum	Engineer Grade	Clear	Good	355	W 3RD ST	6	32	8		0	0	5	TSJ	S COMMERCIAL ST	W 3RD ST	South	Single Post	2x2	Soil	Right	Steel	8/14/2014	Acceptable	43.872674	-116.501515
630	355	D3	E	Aluminum	Engineer Grade	Clear	Good	356	S COMMERCIAL AVE	6	32	9		0	0	5	TSJ	W 2ND ST	S COMMERCIAL AVE	East	Single Post	2x2	Soil	Right	Steel	8/14/2014	Acceptable	43.873555	-116.501518
631	355	D3	E	Aluminum	Engineer Grade	Clear	Good	356	W 2ND ST	6	32	9		0	0	5	TSJ	W 2ND ST	S COMMERCIAL AVE	East	Single Post	2x2	Soil	Right	Steel	8/14/2014	Acceptable	43.873555	-116.501518
632	355	R1-1	E	Aluminum	Engineer Grade	Clear	Good	356	STOP	30	30	8		0	10	5	TSJ	W 2ND ST	S COMMERCIAL AVE	East	Single Post	2x2	Soil	Right	Steel	8/14/2014	Acceptable	43.873555	-116.501518
633	356	R1-1	E	Aluminum	Engineer Grade	Clear	Fair	357	STOP	30	30	8		0	10	5	TSJ	W 2ND ST	S COMMERCIAL	West	Single Post	2x2	Soil	Right	Steel	8/14/2014	Acceptable	43.873656	-116.501298
634	357	D3	E	Aluminum	Engineer Grade	Clear	Good	358	W 1ST ST	6	32	10		0	0	5	TSJ	W 1ST ST	S COMMERCIAL AVE	East	Single Post	2x2	Soil	Right	Steel	8/14/2014	Acceptable	43.874539	-116.501523
635	357	D3	E	Aluminum	Engineer Grade	Clear	Good	358	S COMMERCIAL AVE	6	32	10		0	0	5	TSJ	W 1ST ST	S COMMERCIAL AVE	East	Single Post	2x2	Soil	Right	Steel	8/14/2014	Acceptable	43.874539	-116.501523
636	358	R16-X12	E	Aluminum	Engineer Grade	Clear	Replace	359	NO PARKING TRUCKS OR TRAILERS IN THIS BLOCK	12	24	7		0	0	3	TSJ	S COMMERCIAL ST	W 1ST ST	South	Single Post	2x2	Concrete	Right	Steel	8/14/2014	Acceptable	43.874751	-116.501506
637	359	R5-1	W	Aluminum	Engineer Grade	Clear	Good	360		30	30	10		0	0	10	TSJ	S COMMERCIAL ST	W MAIN ST	North	Single Post	2x2	Concrete	Right	Steel	8/14/2014	Acceptable	43.875048	-116.501295
638	360	R16-X12	W	Aluminum	Engineer Grade	Clear	Good	361	NO PARKING TRUCKS OR TRAILERS IN THIS BLOCK	122	18	3		0	0	3	TSJ	S COMMERCIAL ST	W MAIN ST	North	Single Post	2x2	Concrete	Right	Steel	8/14/2014	Acceptable	43.875197	-116.501312
639	361	R16-X12	W	Aluminum	Engineer Grade	Clear	Good	362	NO PARKING TRUCKS OR TRAILERS IN THIS BLOCK	12	18	5		0	0	10	TSJ	S COMMERCIAL ST	W 1ST ST	South	Single Post	2x2	Concrete	Right	Steel	8/14/2014	Acceptable	43.875212	-116.501532
640	362	D3	S	Aluminum	Engineer Grade	Clear	Good	363	W MAIN ST	6	32	12		0	0	10	TSJ	S COMMERCIAL ST	W MAIN ST	North	Single Post	2x2	Concrete	Right	Steel	8/14/2014	Acceptable	43.87548	-116.501309
641	362	D3	S	Aluminum	Engineer Grade	Clear	Good	363	W MAIN ST	6	32	12		0	0	10	TSJ	S COMMERCIAL ST	W MAIN ST	North	Single Post	2x2	Concrete	Right	Steel	8/14/2014	Acceptable	43.87548	-116.501309
642	362	R1-1	S	Aluminum	Engineer Grade	Clear	Good	363	STOP	36	36	12		0	10	10	TSJ	S COMMERCIAL ST	W MAIN ST	North	Single Post	2x2	Concrete	Right	Steel	8/14/2014	Acceptable	43.87548	-116.501309
643	363	OM-3L	S	Aluminum	Engineer Grade	Clear	Fair	364		12	36	1		0	0	3	TSJ	W MAIN ST	LINCOLN S	East	Single Post	2in. Channel	Soil	Right	Steel	8/18/2014	Acceptable	43.875514	-116.503081
644	364	OM-3R	S	Aluminum	Engineer Grade	Clear	Fair	365		12	36	2		0	0	3	TSJ	W MAIN ST	LINCOLN AVE	East	Single Post	2in. Channel	Concrete	Left	Steel	8/18/2014	Acceptable	43.875648	-116.503037
645	365	OM-3L	S	Aluminum	Engineer Grade	Clear	Fair	366		12	36	1		0	0	5	TSJ	W MAIN ST	LINCOLN AVE	West	Single Post	2in. Channel	Soil	Right	Steel	8/18/2014	Acceptable	43.875667	-116.502904
646	366	R2-1-20	S	Aluminum	Engineer Grade	Clear	Good	367	SPEED LIMIT	18	24	8	35	10	4	8	TSJ	W MAIN ST	LINCOLN AVE	West	Single Post	2x2	Soil	Right	Steel	8/18/2014	Acceptable	43.875674	-116.502858
647	367	OM-3R	S	Aluminum	Engineer Grade	Clear	Poor	368		12	36	1		0	0	3	TSJ	W MAIN ST	LINCOLN AVE	West	Single Post	2in. Channel	Soil	Left	Steel	8/18/2014	Acceptable	43.875505	-116.502961
648	368	OM-3L	S	Aluminum	Engineer Grade	Clear	Poor	369		12	36	1		0	0	3	TSJ	W 2ND ST	LINCOLN AVE	East	Single Post	2x2	Soil	Right	Steel	8/18/2014	Acceptable	43.873569	-116.503066
649	369	OM-3R	S	Aluminum	Engineer Grade	Clear	Poor	370		12	36	1		0	0	3	TSJ	W 2ND ST	LINCOLN AVE	East	Single Post	2x2	Soil	Left	Steel	8/18/2014	Acceptable	43.873656	-116.503071
650	370	OM-3L	S	Aluminum	Engineer Grade	Clear	Poor	371		12	36	1		0	0	3	TSJ	W 2ND ST	LINCOLN AVE	West	Single Post	2x2	Soil	Right	Steel	8/18/2014	Acceptable	43.873654	-116.502962
651	371	OM-3R	S	Aluminum	Engineer Grade	Clear	Poor	372		12	36	1		0	0	3	TSJ	W 2ND ST	LINCOLN AVE	West	Single Post	2x2	Soil	Left	Steel	8/18/2014	Acceptable	43.873576	-116.502963
652	372	R7-13	NW	Aluminum	Engineer Grade	Clear	Replace	373	NO PARKING THIS SIDE OF STREET	12	18	5		0	3	5	TSJ	W 1ST ST	S BOISE AVE	East	Single Post	3 3/8 x 10 I-beam	Soil	Right	Wood	8/18/2014	Acceptable	43.87458	-116.502443
653	373	R7-13	NW	Aluminum	Engineer Grade	Clear	Replace	374	NO PARKING THIS SIDE OF STREET	12	18	5		0	3	5	TSJ	W 1ST ST	S BOISE AVE	East	Single Post	3 3/8 x 6 I-beam	Soil	Right	Wood	8/18/2014	Acceptable	43.874579	-116.50217
654	374	R7-13	NW	Aluminum	Engineer Grade	Clear	Replace	375	NO PARKING THIS SIDE OF STREET	12	18	5		0	3	5	TSJ	W 1ST ST	S COMMERCIAL AVE	East	Single Post	3 3/8 x 6 I-beam	Soil	Right	Wood	8/18/2014	Acceptable	43.874556	-116.501821
655	375	D3	NW	Aluminum	Engineer Grade	Clear	Good	376	W 2ND ST	6	24	11		0	0	9	TSJ	W 2ND ST	S WASHINGTON AVE	East	Single Post	2x2	Soil	Right	Steel	8/18/2014	Acceptable	43.873551	-116.500179
656	375	D3	NW	Aluminum	Engineer Grade	Clear	Good	376	S WASHINGTON AVE	6	36	11		0	0	9	TSJ	W 2ND ST	S WASHINGTON AVE	East	Single Post	2x2	Soil	Right	Steel	8/18/2014	Acceptable	43.873551	-116.500179
657	375	R1-1	NW	Aluminum	Engineer Grade	Clear	Good	376	STOP	30	30	11		0	10	9	TSJ	W 2ND ST	S WASHINGTON AVE	East	Single Post	2x2	Soil	Right	Steel	8/18/2014	Acceptable	43.873551	-116.500179
658	376	D3	S	Aluminum	Engineer Grade	Clear	Good	377	S WASHINGTON AVE	6	36	11		0	0	5	TSJ	W 3RD ST	S WASHINGTON ST	East	Single Post	2x2	Concrete	Right	Steel	8/18/2014	Acceptable	43.872539	-116.500157
659	376	D3	S	Aluminum	Engineer Grade	Clear	Good	377	W 3RD ST	6	30	11		0	0	5	TSJ	W 3RD ST	S WASHINGTON ST	East	Single Post	2x2	Concrete	Right	Steel	8/18/2014	Acceptable	43.872539	-116.500157
660	376	R1-1	S	Aluminum	Engineer Grade	Clear	Good	377	STOP	30	30	11		0	10	5	TSJ	W 3RD ST	S WASHINGTON ST	East	Single Post	2x2	Concrete	Right	Steel	8/18/2014	Acceptable	43.872539	-116.500157
661	377	R7-13	S	Aluminum	Engineer Grade	Clear	Poor	378	NO PARKING THIS SIDE OF STREET	18	24	8		0	3	8	TSJ	W 4TH ST	S BOISE AVE	East	Single Post	2x2	Concrete	Right	Steel	8/18/2014	Acceptable	43.871906	-116.502419
662	378	R7-13	S	Aluminum	Engineer Grade	Clear	Good	379	NO PARKING THIS SIDE OF STREET	18	24	9		0	3	8	TSJ	W 4TH ST	S COMMERCIAL AVE	East	Single Post	2x2	Soil	Right	Steel	8/18/2014	Acceptable	43.871893	-116.501772
663	379	OM-3L	S	Aluminum	Engineer Grade	Clear	Poor	380		12	36	1		0	0	3	TSJ	W 4TH ST	LINCOLN AVE	East	Single Post	3in. Tube	Soil	Right	Steel	8/18/2014	Acceptable	43.871875	-116.503083
664	380	OM-3R	S	Aluminum	Engineer Grade	Clear	Poor	381		12	36	1		0	0	3	TSJ	W 4TH ST	LINCOLN AVE	East	Single Post	3in. Tube	Soil	Left	Steel	8/18/2014	Acceptable	43.871974	-116.503084
665	381	OM-3L	S	Aluminum	Engineer Grade	Clear	Fair	382		12	36	1		0	0	3	TSJ	W 4TH ST	LINCOLN AVE	West	Single Post	2in. Channel	Soil	Right	Steel	8/18/2014	Acceptable	43.87197	-116.502937
666	382	R2-1-20	S	Aluminum	Engineer Grade	Clear	Good	383		18	24	10		0	0	5	TSJ	W 4TH ST	S WASHINGTON AVE	East	Single Post	2in. Channel	Soil	Right	Steel	8/18/2014	Acceptable	43.87189	-116.501076
667	382	R7-101B	S	Aluminum	Engineer Grade	Clear	Good	383	NO PARKING	12	18	10		0	0	5	TSJ	W 4TH ST	S WASHINGTON AVE	East	Single Post	2in. Channel	Soil	Right	Steel	8/18/2014	Acceptable	43.87189	-116.501076
668	383	D3	S	Aluminum	Engineer Grade	Clear	Good	384	S WASHINGTON AVE	6	36	11		0	0	5	TSJ	W 5TH ST	S WASHINGTON AVE	East	Single Post	2in. Channel	Soil	Right	Steel	8/18/2014	Acceptable	43.870825	-116.500144
669	383	D3	S	Aluminum	Engineer Grade	Clear	Good	384	W 5TH ST	6	30	11		0	0	5	TSJ	W 5TH ST	S WASHINGTON AVE	East	Single Post	2in. Channel	Soil	Right	Steel	8/18/2014	Acceptable	43.870825	-116.500144
670	383	R1-1	S	Aluminum	Engineer Grade	Clear	Good	384	STOP	30	30	11		0	10	5	TSJ	W 5TH ST	S WASHINGTON AVE	East	Single Post	2in. Channel	Soil	Right	Steel	8/18/2014	Acceptable	43.870825	-116.500144
671	384	D3	S	Aluminum	Engineer Grade	Clear	Good	385	S WASHINGTON AVE	6	36	10		0	0	5	TSJ	W 6TH ST	S WASHINGTON AVE	East	Single Post	2in. Channel	Soil	Right	Steel	8/18/2014	Acceptable	43.869774	-116.500141
672	384	D3	S	Aluminum	Engineer Grade	Clear	Good	385	W 6TH ST	6	30	10		0	0	5	TSJ	W 6TH ST	S WASHINGTON AVE	East	Single Post	2in. Channel	Soil	Right	Steel	8/18/2014	Acceptable	43.869774	-116.500141
673	384	R1-1	S	Aluminum	Engineer Grade	Clear	Good	385	STOP	30	30	10		0	10	5	TSJ	W 6TH ST	S WASHINGTON AVE	East	Single Post	2in. Channel	Soil	Right	Steel	8/18/2014	Acceptable	43.869774	-116.500141
674	385	D3	S	Aluminum	Engineer Grade	Clear	Good	386	W 10TH ST	6	30	10		0	0	7	TSJ	W 10TH ST	S WASHINGTON AVE	East	Single Post	2in. Channel	Concrete	Right	Steel	8/18/2014	Acceptable	43.866419	-116.500138
675	385	D3	S	Aluminum	Engineer Grade	Clear	Good	386	S WASHINGTON AVE	6	36	10		0	0	7	TSJ	W 10TH ST	S WASHINGTON AVE	East	Single Post	2in. Channel	Concrete	Right	Steel	8/18/2014	Acceptable	43.866419	-116.500138
676	385	R1-1	S	Aluminum	Engineer Grade	Clear	Good	386	STOP	30	30	10		0	10	7	TSJ	W 10TH ST	S WASHINGTON AVE	East	Single Post	2in. Channel	Concrete	Right	Steel	8/18/2014	Acceptable	43.866419	-116.500138
677	386	W9-11	S	Aluminum	Engineer Grade	Clear	Good	387	CAUTION DEAF CHILD PLAYING	18	24	8		0	0	7	TSJ	W 10TH ST	S COMMERCIAL AVE	West	Single Post	2in. Channel	Concrete	Right	Steel	8/18/2014	Acceptable	43.866544	-116.500668
678	387	W9-11	S	Aluminum	Engineer Grade	Clear	Good	388	CAUTION DEAF CHILD AT PLAY	18	24	8		0	0	7	TSJ	W 10TH ST	S BOISE AVE	East	Single Post	2in. Channel	Soil	Right	Steel	8/18/2014	Acceptable	43.866434	-116.502012
679	388	D3	S	Aluminum	Engineer Grade	Clear	Good	389	S HAYES ST	6	30	11		0	0	5	TSJ	S HAYES ST	E 12TH ST	South	Single Post	2in. Channel	Soil	Right	Steel	8/18/2014	Acceptable	43.864696	-116.498735
680	388	D3	S	Aluminum	Engineer Grade	Clear	Good	389	E 12TH ST	6	30	10		0	0	5	TSJ	S HAYES ST	E 12TH ST	South	Single Post	2in. Channel	Soil	Right	Steel	8/18/2014	Acceptable	43.864696	-116.498735
681	388	R1-1	S	Aluminum	Engineer Grade	Clear	Good	389	STOP	30	30	10		0	10	5	TSJ	S HAYES ST	E 12TH ST	South	Single Post	2in. Channel	Soil	Right	Steel	8/18/2014	Acceptable	43.864696	-116.498735
682	389	R16-X12	S	Aluminum	Engineer Grade	Clear	Good	390	SPEED LIMIT 20 UNLESS OFTHERWISE POSTED	30	30	8		0	0	5	TSJ	S HAYES ST	E 12TH ST	North	Single Post	2in. Channel	Soil	Right	Steel	8/18/2014	Acceptable	43.864727	-116.498619
683	390	R16-X12	S	Aluminum	Engineer Grade	Clear	Good	391	CITY OF EMMETT RV DUMP SITE	24	24	10		0	0	5	TSJ	S HAYES AVE	E 10TH ST	North	Single Post	2in. Channel	Soil	Right	Steel	8/18/2014	Acceptable	43.866053	-116.498614
684	391	D3	S	Aluminum	Engineer Grade	Clear	Good	392	E 10TH ST	6	32	9		0	0	5	TSJ	E 10TH ST	S HAYES AVE	West	Single Post	2in. Channel	Soil	Right	Steel	8/18/2014	Acceptable	43.866225	-116.498576
685	391	D3	S	Aluminum	Engineer Grade	Clear	Good	392	S HAYES	6	32	9		0	0	5	TSJ	E 10TH ST	S HAYES AVE	West	Single Post	2in. Channel	Soil	Right	Steel	8/18/2014	Acceptable	43.866225	-116.498576
686	391	R1-1	S	Aluminum	Engineer Grade	Clear	Good	392	STOP	30	30	9		0	10	5	TSJ	E 10TH ST	S HAYES AVE	West	Single Post	2in. Channel	Soil	Right	Steel	8/18/2014	Acceptable	43.866225	-116.498576
687	392	R16-X12	S	Aluminum	Engineer Grade	Clear	Good	393	CITY OF EMMETT RV DUMP SITE	24	24	7		0	0	8	TSJ	S HAYES AVE	E 10TH ST	South	Single Post	2in. Channel	Soil	Right	Steel	8/18/2014	Acceptable	43.866581	-116.498809
688	393	D3	S	Aluminum	Engineer Grade	Clear	Good	394	S HAYES AVE	6	32	10		0	0	5	TSJ	S HAYES AVE	E 6TH ST	North	Single Post	2in. Channel	Soil	Right	Steel	8/18/2014	Acceptable	43.869746	-116.49861
689	393	D3	S	Aluminum	Engineer Grade	Clear	Good	394	E 6TH ST	6	32	10		0	0	5	TSJ	S HAYES AVE	E 6TH ST	North	Single Post	2in. Channel	Soil	Right	Steel	8/18/2014	Acceptable	43.869746	-116.49861
690	394	R1-1	S	Aluminum	Engineer Grade	Clear	Good	395	STOP	24	24	8		0	10	5	TSJ	S HAYES AVE	E 6TH ST	South	Single Post	2in. Channel	Soil	Right	Steel	8/18/2014	Acceptable	43.869905	-116.498745
691	395	R1-1	S	Aluminum	Engineer Grade	Clear	Good	396	STOP	30	30	9		0	10	5	TSJ	E 5TH ST	S HAYES AVE	East	Single Post	2in. Channel	Soil	Right	Steel	8/18/2014	Acceptable	43.870816	-116.498774
692	396	W14-1	W	Aluminum	Engineer Grade	Clear	Good	397	DEAD END	41	41	9		0	5	3	TSJ	E 5TH ST	S HAYES AVE	East	Single Post	2in. Channel	Soil	Right	Steel	8/18/2014	Acceptable	43.870821	-116.498568
693	397	D3	E	Aluminum	Engineer Grade	Clear	Good	398	S HAYES AVE	6	32	8		0	4	3	TSJ	E 5TH ST	S HAYES AVE	West	Single Post	2x2	Soil	Right	Steel	8/18/2014	Acceptable	43.87094	-116.49851
694	397	D3	E	Aluminum	Engineer Grade	Clear	Good	398	E 5TH ST	6	32	8		0	4	3	TSJ	E 5TH ST	S HAYES AVE	West	Single Post	2x2	Soil	Right	Steel	8/18/2014	Acceptable	43.87094	-116.49851
695	397	R1-1	E	Aluminum	Engineer Grade	Clear	Fair	398	STOP	30	30	8		0	10	3	TSJ	E 5TH ST	S HAYES AVE	West	Single Post	2x2	Soil	Right	Steel	8/18/2014	Acceptable	43.87094	-116.49851
696	398	R1-1	S	Aluminum	Engineer Grade	Clear	Good	399	STOP	30	30	11		0	10	5	TSJ	S HAYES AVE	E 4TH ST	North	Single Post	2x2	Soil	Right	Steel	8/18/2014	Acceptable	43.871835	-116.498587
697	399	D3	N	Aluminum	Engineer Grade	Clear	Good	400	E 4TH ST	6	32	9		0	0	6	TSJ	S HAYES AVE	E 4TH ST	South	Single Post	2x2	Soil	Right	Steel	8/18/2014	Acceptable	43.872046	-116.498769
698	399	D3	W	Aluminum	Engineer Grade	Clear	Good	400	S HAYES AVE	6	32	10		0	0	6	TSJ	S HAYES AVE	E 4TH ST	South	Single Post	2x2	Soil	Right	Steel	8/18/2014	Acceptable	43.872046	-116.498769
699	399	R1-1	N	Aluminum	Engineer Grade	Clear	Good	400	STOP	30	30	10		0	10	6	TSJ	S HAYES AVE	E 4TH ST	South	Single Post	2x2	Soil	Right	Steel	8/18/2014	Acceptable	43.872046	-116.498769
700	400	D3	S	Aluminum	Engineer Grade	Clear	Good	401	E 3RD ST	6	32	13		0	0	6	TSJ	E 3RD ST	S HAYES ST	East	Single Post	2x2	Concrete	Right	Steel	8/18/2014	Acceptable	43.872536	-116.498799

Sign ID	Support ID	MUTCD	Facing	Backing	Face Material	Visibility	Sign Condition	Photo No.	Sign Text	Length (in)	Width (in)	Height (in)	Num. Text	Num. Size (in)	Text Size (in)	Offset (ft)	Inspector	Road Name	Location Desc.	Travel Direction	Post Type	Post Size	Post Base	Post Pos.	Post Mat'l.	Date Insp.	Post Rating	Latitude	Longitude
701	400	D3	W	Aluminum	Engineer Grade	Clear	Good	401	S HAYES ST	6	32	13		0	0	6	TSJ	E 3RD ST	S HAYES ST	East	Single Post	2x2	Concrete	Right	Steel	8/18/2014	Acceptable	43.872536	-116.498799
702	400	R1-1	W	Aluminum	Engineer Grade	Clear	Good	401	STOP	30	30	13		0	10	6	TSJ	E 3RD ST	S HAYES ST	East	Single Post	2x2	Concrete	Right	Steel	8/18/2014	Acceptable	43.872536	-116.498799
703	401	R1-1	S	Aluminum	Engineer Grade	Clear	Poor	402	STOP	30	30	9		0	10	6	TSJ	E 3RD ST	S HAYES AVE	West	Single Post	2x2	Soil	Right	Steel	8/18/2014	Acceptable	43.872659	-116.498578
704	402	R1-1	E	Aluminum	Engineer Grade	Clear	Fair	403	STOP	24	24	10		0	10	6	TSJ	E 2ND ST	S HAYES AVE	West	Single Post	2in. Channel	Soil	Right	Steel	8/18/2014	Acceptable	43.873666	-116.498577
705	403	D3	W	Aluminum	Engineer Grade	Clear	Good	404	E 2ND ST	6	32	11		0	4	6	TSJ	E 2ND ST	S HAYES AVE	East	Single Post	2x2	Soil	Right	Steel	8/18/2014	Acceptable	43.873573	-116.4988
706	403	D3	W	Aluminum	Engineer Grade	Clear	Good	404	S HAYES AVE	6	32	10		0	4	6	TSJ	E 2ND ST	S HAYES AVE	East	Single Post	2x2	Soil	Right	Steel	8/18/2014	Acceptable	43.873573	-116.4988
707	403	R1-1	W	Aluminum	Engineer Grade	Clear	Good	404	STOP	30	30	10		0	10	6	TSJ	E 2ND ST	S HAYES AVE	East	Single Post	2x2	Soil	Right	Steel	8/18/2014	Acceptable	43.873573	-116.4988
708	404	R7-8	W	Aluminum	Engineer Grade	Clear	Good	405	RESERVED PARKING	12	18	8		0	3	6	TSJ	E 1ST ST	S HAYES AVE	North	Single Post	2x2	Soil	Right	Steel	8/18/2014	Acceptable	43.874245	-116.49861
709	405	R7-8	W	Aluminum	Engineer Grade	Clear	Good	406	NO PARKING LOADING ZONE	18	24	8		0	3	6	TSJ	E 1ST ST	S HAYES	North	Single Post	2x2	Soil	Right	Steel	8/18/2014	Acceptable	43.874315	-116.49861
710	406	R7-8	W	Aluminum	Engineer Grade	Tree Obscured	Good	407	RESERVED PARKING	12	18	8		0	3	6	TSJ	E 1ST ST	S HAYES AVE	North	Single Post	2x2	Soil	Right	Steel	8/18/2014	Acceptable	43.87438	-116.498606
711	407	R1-1	W	Aluminum	Engineer Grade	Clear	Good	408	STOP	30	30	10		0	10	4	TSJ	E 1ST ST	S HAYES AVE	East	Single Post	2x2	Concrete	Right	Steel	8/18/2014	Acceptable	43.874566	-116.498798
712	408	D3	S	Aluminum	Engineer Grade	Clear	Good	409	E 1ST ST	6	32	10		0	0	4	TSJ	E 1ST ST	S HAYES AVE	West	Single Post	2x2	Soil	Right	Steel	8/18/2014	Acceptable	43.874659	-116.498592
713	408	D3	E	Aluminum	Engineer Grade	Clear	Good	409	S HAYES AVE	6	32	10		0	0	4	TSJ	E 1ST ST	S HAYES AVE	West	Single Post	2x2	Soil	Right	Steel	8/18/2014	Acceptable	43.874659	-116.498592
714	408	R1-1	E	Aluminum	Engineer Grade	Clear	Poor	409	STOP	30	30	9		0	10	4	TSJ	E 1ST ST	S HAYES AVE	West	Single Post	2x2	Soil	Right	Steel	8/18/2014	Acceptable	43.874659	-116.498592
715	409	R7-1	N	Aluminum	Engineer Grade	Clear	Fair	410	NO PARKING TRUCKS OR TRAILERS IN THIS BLOCK	12	18	7		0	3	5	TSJ	S HAYES AVE	E 1ST ST	South	Single Post	3in. Tube	Soil	Right	Steel	8/18/2014	Acceptable	43.874832	-116.498796
716	410	R7-1	N	Aluminum	Engineer Grade	Clear	Good	411	NO PARKING TRUCKS OR TRAILERS IN THIS BLOCK	18	24	7		0	3	5	TSJ	S HAYES AVE	E MAIN ST	North	Single Post	3in. Tube	Concrete	Right	Steel	8/18/2014	Acceptable	43.875234	-116.498593
717	411	R7-1	N	Aluminum	Engineer Grade	Clear	Poor	412	NO PARKING TRUCKS OR TRAILERS IN THIS BLOCK	12	24	7		0	3	5	TSJ	S HAYES AVE	E MAIN ST	South	Single Post	3in. Tube	Concrete	Right	Steel	8/18/2014	Acceptable	43.87537	-116.49881
718	412	D3	E	Aluminum	Engineer Grade	Clear	Good	413	S HAYES AVE	6	32	11		0	0	5	TSJ	S HAYES AVE	E MAIN ST	North	Single Post	2x2	Concrete	Right	Steel	8/18/2014	Acceptable	43.875496	-116.498582
719	412	D3	S	Aluminum	Engineer Grade	Clear	Good	413	E MAIN ST	6	32	11		0	0	5	TSJ	S HAYES AVE	E MAIN ST	North	Single Post	2x2	Concrete	Right	Steel	8/18/2014	Acceptable	43.875496	-116.498582
720	412	R1-1	S	Aluminum	Engineer Grade	Clear	Good	413	STOP	36	36	11		0	10	5	TSJ	S HAYES AVE	E MAIN ST	North	Single Post	2x2	Concrete	Right	Steel	8/18/2014	Acceptable	43.875496	-116.498582
721	413	D3	E	Aluminum	Engineer Grade	Clear	Good	414	S WARDWELL AVE	6	36	9		0	0	5	TSJ	S WARDWELL AVE	E MAIN ST	North	Single Post	2x2	Soil	Right	Steel	8/18/2014	Acceptable	43.875526	-116.497141
722	413	D3	S	Aluminum	Engineer Grade	Clear	Good	414	E MAIN ST	6	32	9		0	0	5	TSJ	S WARDWELL AVE	E MAIN ST	North	Single Post	2x2	Soil	Right	Steel	8/18/2014	Acceptable	43.875526	-116.497141
723	413	R1-1	S	Aluminum	Engineer Grade	Clear	Good	414	STOP	30	30	8		0	10	5	TSJ	S WARDWELL AVE	E MAIN ST	North	Single Post	2x2	Soil	Right	Steel	8/18/2014	Acceptable	43.875526	-116.497141
724	414	R1-1	S	Aluminum	Engineer Grade	Clear	Good	415	STOP	30	30	8		0	10	5	TSJ	S WARDWELL AVE	E 1ST ST	East	Single Post	2x2	Concrete	Right	Steel	8/18/2014	Acceptable	43.874567	-116.497354
725	415	D3	S	Aluminum	Engineer Grade	Clear	Good	416	E 1ST ST	6	32	10		0	0	5	TSJ	S WARDWELL AVE	E 1ST ST	West	Single Post	2x2	Soil	Right	Steel	8/18/2014	Acceptable	43.874662	-116.497151
726	415	D3	E	Aluminum	Engineer Grade	Clear	Good	416	S WARDWEWLL AVE	6	36	10		0	0	5	TSJ	S WARDWELL AVE	E 1ST ST	West	Single Post	2x2	Soil	Right	Steel	8/18/2014	Acceptable	43.874662	-116.497151
727	415	R1-1	E	Aluminum	Engineer Grade	Clear	Good	416	STOP	30	30	10		0	10	5	TSJ	S WARDWELL AVE	E 1ST ST	West	Single Post	2x2	Soil	Right	Steel	8/18/2014	Acceptable	43.874662	-116.497151
728	393	R1-1	S	Aluminum	Engineer Grade	Clear	Good	394	STOP	30	30	10		0	10	5	TSJ	S HAYES AVE	E 6TH ST	North	Single Post	2in. Channel	Soil	Right	Steel	8/18/2014	Acceptable	43.869746	-116.49861
729	416	R1-1	S	Aluminum	Engineer Grade	Clear	Good	417	STOP	30	30	10		0	10	5	TSJ	S WARDWELL AVE	E 2ND AVE	East	Single Post	2x2	Concrete	Right	Steel	8/18/2014	Acceptable	43.873577	-116.497344
730	417	D3	S	Aluminum	Engineer Grade	Clear	Good	418	E 2ND ST	6	32	8		0	0	5	TSJ	S WARDWELL AVE	E 2ND ST	West	Single Post	2x2	Soil	Left	Steel	8/18/2014	Acceptable	43.873587	-116.497137
731	417	D3	S	Aluminum	Engineer Grade	Clear	Good	418	S WARDWELL	6	32	10		0	0	5	TSJ	S WARDWELL AVE	E 2ND ST	West	Single Post	2x2	Soil	Left	Steel	8/18/2014	Acceptable	43.873587	-116.497137
732	418	D3	S	Aluminum	Engineer Grade	Clear	Good	419	E 2ND ST	6	32	10		0	0	5	TSJ	S WARDWELL AVE	E 2ND ST	West	Single Post	2x2	Soil	Right	Steel	8/18/2014	Acceptable	43.873675	-116.497134
733	418	D3	S	Aluminum	Engineer Grade	Clear	Good	419	S WARDWELL AVE	6	36	10		0	0	5	TSJ	S WARDWELL AVE	E 2ND ST	West	Single Post	2x2	Soil	Right	Steel	8/18/2014	Acceptable	43.873675	-116.497134
734	418	R1-1	S	Aluminum	Engineer Grade	Clear	Good	419	STOP	30	30	10		0	10	5	TSJ	S WARDWELL AVE	E 2ND ST	West	Single Post	2x2	Soil	Right	Steel	8/18/2014	Acceptable	43.873675	-116.497134
735	419	R1-1	S	Aluminum	Engineer Grade	Clear	Fair	420	STOP	30	30	8		0	10	5	TSJ	S WARDWELL AVE	E 3RD ST	East	Single Post	2x2	Soil	Right	Steel	8/18/2014	Acceptable	43.872587	-116.497349
736	420	D3	S	Aluminum	Engineer Grade	Clear	Good	420	E 3RD ST	6	32	10		0	0	5	TSJ	S WARDWELL AVE	E 3RD ST	West	Single Post	2x2	Soil	Right	Steel	8/18/2014	Acceptable	43.872657	-116.497126
737	420	D3	S	Aluminum	Engineer Grade	Clear	Good	420	S WARDWELL AVE	6	36	10		0	0	5	TSJ	S WARDWELL AVE	E 3RD ST	West	Single Post	2x2	Soil	Right	Steel	8/18/2014	Acceptable	43.872657	-116.497126
738	420	R1-1	S	Aluminum	Engineer Grade	Clear	Good	420	STOP	30	30	10		0	10	5	TSJ	S WARDWELL AVE	E 3RD ST	West	Single Post	2x2	Soil	Right	Steel	8/18/2014	Acceptable	43.872657	-116.497126
739	421	D3	S	Aluminum	Engineer Grade	Clear	Good	422	E 4TH ST	6	32	11		0	0	6	TSJ	S WARDWELL AVE	E 4TH ST	South	Single Post	2x2	Concrete	Right	Steel	8/18/2014	Acceptable	43.871959	-116.497317
740	421	D3	S	Aluminum	Engineer Grade	Clear	Good	422	S WARDWELL AVE	6	32	11		0	0	6	TSJ	S WARDWELL AVE	E 4TH ST	South	Single Post	2x2	Concrete	Right	Steel	8/18/2014	Acceptable	43.871959	-116.497317
741	421	R1-1	S	Aluminum	Engineer Grade	Clear	Good	422	STOP	30	30	11		0	10	6	TSJ	S WARDWELL AVE	E 4TH ST	South	Single Post	2x2	Concrete	Right	Steel	8/18/2014	Acceptable	43.871959	-116.497317
742	422	D3	S	Aluminum	Engineer Grade	Clear	Good	423	S MCKINLEY AVE	6	36	10		0	0	6	TSJ	S MCKINLEY AVE	E 4TH ST	South	Single Post	2x2	Soil	Right	Steel	8/18/2014	Acceptable	43.871938	-116.495887
743	422	D3	S	Aluminum	Engineer Grade	Clear	Good	423	E 4TH ST	6	32	10		0	0	6	TSJ	S MCKINLEY AVE	E 4TH ST	South	Single Post	2x2	Soil	Right	Steel	8/18/2014	Acceptable	43.871938	-116.495887
744	422	R1-1	S	Aluminum	Engineer Grade	Clear	Fair	423	STOP	30	30	10		0	10	6	TSJ	S MCKINLEY AVE	E 4TH ST	South	Single Post	2x2	Soil	Right	Steel	8/18/2014	Acceptable	43.871938	-116.495887
745	423	R7-13	S	Aluminum	Engineer Grade	Clear	Good	424	HERE T0 CORNER 7:30-9:00 AM AND 2:30PM-3:30PM	18	24	7		0	0	6	TSJ	S MCKINLEY AVE	E 4TH ST	South	Single Post	2x2	Concrete	Right	Steel	8/18/2014	Acceptable	43.872269	-116.495868
746	424	D3	S	Aluminum	Engineer Grade	Clear	Good	425	E 3RD ST	6	32	10		0	0	9	TSJ	E 3RD ST	S MCKINLEY AVE	East	Single Post	2x2	Concrete	Right	Steel	8/18/2014	Acceptable	43.872553	-116.4959
747	424	D3	S	Aluminum	Engineer Grade	Clear	Good	425	S MCKINLEY AVE	6	36	10		0	0	9	TSJ	E 3RD ST	S MCKINLEY AVE	East	Single Post	2x2	Concrete	Right	Steel	8/18/2014	Acceptable	43.872553	-116.4959
748	424	R1-1	S	Aluminum	Engineer Grade	Clear	Fair	425	STOP	30	30	10		0	10	9	TSJ	E 3RD ST	S MCKINLEY AVE	East	Single Post	2x2	Concrete	Right	Steel	8/18/2014	Acceptable	43.872553	-116.4959
749	425	R1-1	S	Aluminum	Engineer Grade	Clear	Good	426	STOP	30	30	8		0	10	4	TSJ	E 3RD ST	S MCKINLEY	West	Single Post	2x2	Soil	Right	Steel	8/18/2014	Acceptable	43.872662	-116.495678
750	426	R1-1	S	Aluminum	Engineer Grade	Clear	Good	427	STOP	30	30	8		0	10	4	TSJ	S MCKINLEY AVE	E 2ND ST	West	Single Post	2x2	Soil	Right	Steel	8/18/2014	Acceptable	43.873681	-116.495698
751	427	D3	S	Aluminum	Engineer Grade	Clear	Good	428	E 2ND ST	6	32	10		0	0	4	TSJ	S MCKINLEY AVE	E SECOND ST	East	Single Post	2x2	Soil	Right	Steel	8/18/2014	Acceptable	43.873577	-116.495907
752	427	D3	S	Aluminum	Engineer Grade	Clear	Good	428	S MCKINLEY AVE	6	36	10		0	0	4	TSJ	S MCKINLEY AVE	E SECOND ST	East	Single Post	2x2	Soil	Right	Steel	8/18/2014	Acceptable	43.873577	-116.495907
753	427	R1-1	S	Aluminum	Engineer Grade	Clear	Good	428	STOP	30	30	10		0	10	4	TSJ	S MCKINLEY AVE	E SECOND ST	East	Single Post	2x2	Soil	Right	Steel	8/18/2014	Acceptable	43.873577	-116.495907
754	428	D3	S	Aluminum	Engineer Grade	Clear	Good	429	E SECOND ST	6	32	8		0	0	4	TSJ	S MCKINLEY AVE	E SECOND ST	West	Single Post	2x2	Soil	Left	Steel	8/18/2014	Acceptable	43.873671	-116.495903
755	428	D3	S	Aluminum	Engineer Grade	Clear	Good	429	S MCKINLEY AVE	6	32	8		0	0	4	TSJ	S MCKINLEY AVE	E SECOND ST	West	Single Post	2x2	Soil	Left	Steel	8/18/2014	Acceptable	43.873671	-116.495903
756	429	R1-1	S	Aluminum	Engineer Grade	Clear	Good	430	STOP	30	30	10		0	10	4	TSJ	S MCKINLEY AVE	E 1ST ST	West	Single Post	2x2	Soil	Right	Steel	8/18/2014	Acceptable	43.874682	-116.495717
757	430	D3	S	Aluminum	Engineer Grade	Clear	Good	431	E 1ST ST	6	32	8		0	0	4	TSJ	S MCKINLEY AVE	E 1ST ST	East	Single Post	2x2	Soil	Right	Steel	8/18/2014	Acceptable	43.874572	-116.495917
758	430	D3	S	Aluminum	Engineer Grade	Clear	Good	431	S MCKINLEY AVE	6	36	8		0	0	4	TSJ	S MCKINLEY AVE	E 1ST ST	East	Single Post	2x2	Soil	Right	Steel	8/18/2014	Acceptable	43.874572	-116.495917
759	430	R1-1	S	Aluminum	Engineer Grade	Clear	Good	431	STOP	30	30	8		0	10	4	TSJ	S MCKINLEY AVE	E 1ST ST	East	Single Post	2x2	Soil	Right	Steel	8/18/2014	Acceptable	43.874572	-116.495917
760	431	D3	S	Aluminum	Engineer Grade	Clear	Good	432	E MAIN ST	6	32	8		0	0	5	TSJ	S MCKINLEY AVE	E MAIN ST	North	Single Post	2x2	Soil	Right	Steel	8/18/2014	Acceptable	43.8755	-116.495716
761	431	D3	S	Aluminum	Engineer Grade	Clear	Good	432	S MCKINLEY	6	36	10		0	0	5	TSJ	S MCKINLEY AVE	E MAIN ST	North	Single Post	2x2	Soil	Right	Steel	8/18/2014	Acceptable	43.8755	-116.495716
762	431	R1-1	S	Aluminum	Engineer Grade	Clear	Good	432	STOP	30	30	8		0	10	5	TSJ	S MCKINLEY AVE	E MAIN ST	North	Single Post	2x2	Soil	Right	Steel	8/18/2014	Acceptable	43.8755	-116.495716
763	432	R3-4	N	Aluminum	Engineer Grade	Clear	Replace	433		24	24	4		0	0	7	TSJ	S MCKINLEY AVE	E MAIN ST	South	Single Post	2x2	Soil	Left	Steel	8/18/2014	Acceptable	43.87557	-116.495714
764	433	D3	N	Aluminum	Engineer Grade	Clear	Good	434	S HAWTHORNE AVE	6	24	8		0	4	3	TSJ	E 3RD ST	S HAWTHORNE AVE	East	Single Post	2x2	Soil	Right	Steel	8/18/2014	Acceptable	43.872621	-116.494334
765	433	D3	N	Aluminum	Engineer Grade	Clear	Good	434	E 3RD ST	6	24	8		0	4	3	TSJ	E 3RD ST	S HAWTHORNE AVE	East	Single Post	2x2	Soil	Right	Steel	8/18/2014	Acceptable	43.872621	-116.494334
766	434	D3	S	Aluminum	Engineer Grade	Clear	Good	435	E 2ND ST	6	24	9		0	4	5	TSJ	S HAWTHORNE AVE	E 2ND ST	North	Single Post	2x2	Soil	Right	Steel	8/18/2014	Acceptable	43.873565	-116.49438
767	434	D3	W	Aluminum	Engineer Grade	Clear	Good	435	S HAWTHORNE AVE	6	24	9		0	4	5	TSJ	S HAWTHORNE AVE	E 2ND ST	North	Single Post	2x2	Soil	Right	Steel	8/18/2014	Acceptable	43.873565	-116.49438
768	435	D3	S	Aluminum	Engineer Grade	Clear	Good	436	E 1ST ST	6	24	11		0	4	3	TSJ	S HAWTHORNE AVE	E 1ST ST	North	Single Post	2x2	Soil	Right	Steel	8/18/2014	Acceptable	43.874553	-116.494412
769	435	D3	W	Aluminum	Engineer Grade	Clear	Good	436	S HAWTHORNE AVE	6	24	11		0	4	3	TSJ	S HAWTHORNE AVE	E 1ST ST	North	Single Post	2x2	Soil	Right	Steel	8/18/2014	Acceptable	43.874553	-116.494412
770	435	R1-1	S	Aluminum	Engineer Grade	Clear	Good	436	STOP	30	30	11		0	10	3	TSJ	S HAWTHORNE AVE	E 1ST ST	North	Single Post	2x2	Soil	Right	Steel	8/18/2014	Acceptable	43.874553	-116.494412
771	436	D3	S	Aluminum	Engineer Grade	Clear	Good	437	E 4TH ST	6	24	8		0	4	3	TSJ	S HAWTHORNE AVE	E 4TH ST	North	Single Post	2x2	Concrete	Right	Steel	8/18/2014	Acceptable	43.871822	-116.494297
772	436	D3	W	Aluminum	Engineer Grade	Clear	Good	437	S HAWTHORNE AVE	6	24	11		0	4	3	TSJ	S HAWTHORNE AVE	E 4TH ST	North	Single Post	2x2	Concrete	Right	Steel	8/18/2014	Acceptable	43.871822	-116.494297
773	436	R1-1	S	Aluminum	Engineer Grade	Clear	Good	437	STOP	30	30	11		0	10	3	TSJ	S HAWTHORNE AVE	E 4TH ST	North	Single Post	2x2	Concrete	Right	Steel	8/18/2014	Acceptable	43.871822	-116.494297
774	437	R1-1	N	Aluminum	Engineer Grade	Clear	Good	438	STOP	30	30	7		0	10	7	TSJ	S HAWTHORNE AVE	E 5TH ST	South	Single Post	2x2	Soil	Right	Steel	8/18/2014	Acceptable	43.870943	-116.49446
775	437	R1-4	N	Aluminum	Engineer Grade	Clear	Good	438	ALL WAY	9	18	7		0	4	7	TSJ	S HAWTHORNE AVE	E 5TH ST	South	Single Post	2x2	Soil	Right	Steel	8/18/2014	Acceptable	43.870943	-116.49446
776	438	W14-1	N	Aluminum	Engineer Grade	Clear	Good	439	DEAD END	41	41	7		0	5	14	TSJ	S HAWTHORNE AVE	E 5TH ST	West	Single Post	2x2	Concrete	Right	Steel	8/18/2014	Acceptable	43.870923	-116.494496

Sign ID	Support ID	MUTCD	Facing	Backing	Face Material	Visibility	Sign Condition	Photo No.	Sign Text	Length (in)	Width (in)	Height (in)	Num. Text	Num. Size (in)	Text Size (in)	Offset (ft)	Inspector	Road Name	Location Desc.	Travel Direction	Post Type	Post Size	Post Base	Post Pos.	Post Mat'l.	Date Insp.	Post Rating	Latitude	Longitude
777	439	R1-1	N	Aluminum	Engineer Grade	Clear	Good	440	STOP	24	24	8		0	10	5	TSJ	S HAWTHORNE AVE	E 5TH ST	East	Single Post	2x2	Soil	Right	Steel	8/18/2014	Acceptable	43.870761	-116.494479
778	439	R1-4	W	Aluminum	Engineer Grade	Clear	Good	440	ALL WAY	9	18	8		0	4	5	TSJ	S HAWTHORNE AVE	E 5TH ST	East	Single Post	2x2	Soil	Right	Steel	8/18/2014	Acceptable	43.870761	-116.494479
779	440	R1-1	E	Aluminum	Engineer Grade	Clear	Fair	441	STOP	24	24	8		0	10	8	TSJ	S HAWTHORNE AVE	E 5TH ST	North	Single Post	2x2	Concrete	Right	Steel	8/18/2014	Acceptable	43.870743	-116.494265
780	440	R1-4	E	Aluminum	Engineer Grade	Clear	Good	441	ALL WAY	9	18	8		0	4	8	TSJ	S HAWTHORNE AVE	E 5TH ST	North	Single Post	2x2	Concrete	Right	Steel	8/18/2014	Acceptable	43.870743	-116.494265
781	441	D3	S	Aluminum	Engineer Grade	Clear	Good	442	E 5TH ST	6	24	11		0	4	8	TSJ	S HAWTHORNE AVE	E 5TH ST	West	Single Post	2x2	Soil	Right	Steel	8/18/2014	Acceptable	43.870896	-116.494297
782	441	D3	E	Aluminum	Engineer Grade	Clear	Good	442	S HAWTHORNE AVE	6	24	11		0	4	8	TSJ	S HAWTHORNE AVE	E 5TH ST	West	Single Post	2x2	Soil	Right	Steel	8/18/2014	Acceptable	43.870896	-116.494297
783	441	R1-1	E	Aluminum	Engineer Grade	Clear	Good	442	STOP	24	24	11		0	10	8	TSJ	S HAWTHORNE AVE	E 5TH ST	West	Single Post	2x2	Soil	Right	Steel	8/18/2014	Acceptable	43.870896	-116.494297
784	441	R1-4	E	Aluminum	Engineer Grade	Clear	Good	442	ALL WAY	9	18	7		0	4	8	TSJ	S HAWTHORNE AVE	E 5TH ST	West	Single Post	2x2	Soil	Right	Steel	8/18/2014	Acceptable	43.870896	-116.494297
785	442	D3	N	Aluminum	Engineer Grade	Tree Obscured	Good	443	E 4TH ST	6	24	12		0	4	6	TSJ	S HAWTHORNE AVE	E 6TH ST	West	Single Post	2x2	Soil	Right	Steel	8/18/2014	Acceptable	43.869771	-116.494408
786	442	D3	N	Aluminum	Engineer Grade	Tree Obscured	Good	443	S HAWTHORNE AVE	6	24	12		0	4	6	TSJ	S HAWTHORNE AVE	E 6TH ST	West	Single Post	2x2	Soil	Right	Steel	8/18/2014	Acceptable	43.869771	-116.494408
787	442	W14-1	N	Aluminum	Engineer Grade	Tree Obscured	Good	443	DEAD END	30	30	8		0	5	6	TSJ	S HAWTHORNE AVE	E 6TH ST	West	Single Post	2x2	Soil	Right	Steel	8/18/2014	Acceptable	43.869771	-116.494408
788	443	D3	N	Aluminum	Engineer Grade	Clear	Good	444	E 7TH ST	6	24	10		0	4	6	TSJ	S HAWTHORNE AVE	E 7TH ST	South	Single Post	2x2	Soil	Right	Steel	8/18/2014	Acceptable	43.868787	-116.494409
789	443	D3	N	Aluminum	Engineer Grade	Clear	Good	444	S HAWTHORNE AVE	6	24	10		0	4	6	TSJ	S HAWTHORNE AVE	E 7TH ST	South	Single Post	2x2	Soil	Right	Steel	8/18/2014	Acceptable	43.868787	-116.494409
790	443	R1-1	N	Aluminum	Engineer Grade	Clear	Good	444	STOP	30	30	10		0	10	6	TSJ	S HAWTHORNE AVE	E 7TH ST	South	Single Post	2x2	Soil	Right	Steel	8/18/2014	Acceptable	43.868787	-116.494409
791	444	D3	N	Aluminum	Engineer Grade	Clear	Good	445	PEACH ST	6	24	11		0	4	15	TSJ	S HAWTHORNE AVE	PEACH ST	South	Single Post	2x2	Soil	Right	Steel	8/18/2014	Acceptable	43.867545	-116.494714
792	444	D3	E	Aluminum	Engineer Grade	Clear	Good	445	S HAWTHORNE AVE	6	24	11		0	4	15	TSJ	S HAWTHORNE AVE	PEACH ST	South	Single Post	2x2	Soil	Right	Steel	8/18/2014	Acceptable	43.867545	-116.494714
793	445	D3	S	Aluminum	Engineer Grade	Clear	Good	446	E 7TH ST	6	24	11		0	4	8	TSJ	S MCKINLEY AVE	E 7TH ST	North	Single Post	2x2	Soil	Right	Steel	8/18/2014	Acceptable	43.868643	-116.495768
794	445	D3	W	Aluminum	Engineer Grade	Clear	Good	446	S MCKINLEY AVE	6	24	11		0	4	8	TSJ	S MCKINLEY AVE	E 7TH ST	North	Single Post	2x2	Soil	Right	Steel	8/18/2014	Acceptable	43.868643	-116.495768
795	445	R1-1	S	Aluminum	Engineer Grade	Clear	Good	446	STOP	24	24	9		0	8	8	TSJ	S MCKINLEY AVE	E 7TH ST	North	Single Post	2x2	Soil	Right	Steel	8/18/2014	Acceptable	43.868643	-116.495768
796	446	R2-1-20	N	Aluminum	Engineer Grade	Clear	Fair	447	SPEED LIMIT	24	30	5	20	10	4	8	TSJ	S MCKINLEY AVE	E 7TH ST	South	Single Post	2in. Channel	Soil	Right	Steel	8/18/2014	Acceptable	43.868494	-116.495903
797	447	D3	S	Aluminum	Engineer Grade	Clear	Good	448	E 7TH ST	6	24	11		0	4	4	TSJ	E 7TH ST	S WARDWELL AVE	West	Single Post	2x2	Soil	Right	Steel	8/18/2014	Acceptable	43.868758	-116.497096
798	447	D3	E	Aluminum	Engineer Grade	Clear	Good	448	S WARDWELL AVE	6	24	11		0	4	4	TSJ	E 7TH ST	S WARDWELL AVE	West	Single Post	2x2	Soil	Right	Steel	8/18/2014	Acceptable	43.868758	-116.497096
799	447	R1-1	E	Aluminum	Engineer Grade	Clear	Good	448	STOP	30	30	9		0	10	4	TSJ	E 7TH ST	S WARDWELL AVE	West	Single Post	2x2	Soil	Right	Steel	8/18/2014	Acceptable	43.868758	-116.497096
800	448	W14-1	E	Aluminum	Engineer Grade	Clear	Fair	449	DEAD END	30	30	6		0	5	8	TSJ	E 7TH ST	S WARDWELL AVE	West	Single Post	3in. Tube	Soil	Right	Steel	8/18/2014	Acceptable	43.86879	-116.497381
801	449	D3	S	Aluminum	Engineer Grade	Clear	Good	450	E 6TH ST	6	24	10		0	4	5	TSJ	E 6TH ST	S WASHINGTON AVE	West	Single Post	2x2	Soil	Right	Steel	8/18/2014	Acceptable	43.869925	-116.499914
802	449	D3	E	Aluminum	Engineer Grade	Clear	Good	450	S WASHINGTON AVE	6	24	10		0	4	5	TSJ	E 6TH ST	S WASHINGTON AVE	West	Single Post	2x2	Soil	Right	Steel	8/18/2014	Acceptable	43.869925	-116.499914
803	449	R1-1	E	Aluminum	Engineer Grade	Clear	Good	450	STOP	30	30	8		0	10	5	TSJ	E 6TH ST	S WASHINGTON AVE	West	Single Post	2x2	Soil	Right	Steel	8/18/2014	Acceptable	43.869925	-116.499914
804	450	D3	E	Aluminum	Engineer Grade	Clear	Good	451	S WASHINGTON AVE	6	24	10		0	4	6	TSJ	E 5TH ST	S WASHINGTON AVE	West	Single Post	2x2	Soil	Right	Steel	8/18/2014	Acceptable	43.870976	-116.499923
805	450	D3	S	Aluminum	Engineer Grade	Clear	Good	451	E 5TH ST	6	24	10		0	4	6	TSJ	E 5TH ST	S WASHINGTON AVE	West	Single Post	2x2	Soil	Right	Steel	8/18/2014	Acceptable	43.870976	-116.499923
806	450	R1-1	E	Aluminum	Engineer Grade	Clear	Good	451	STOP	30	30	10		0	10	6	TSJ	E 5TH ST	S WASHINGTON AVE	West	Single Post	2x2	Soil	Right	Steel	8/18/2014	Acceptable	43.870976	-116.499923
807	451	R7-13	W	Aluminum	Engineer Grade	Clear	Poor	452	NO PARKING THIS SIDE OF STREET	18	24	8		0	4	8	TSJ	E 4TH ST	S WASHINGTON AVE	East	Single Post	2x2	Concrete	Right	Steel	8/18/2014	Acceptable	43.8719	-116.499828
808	452	R7-13	W	Aluminum	Engineer Grade	Clear	Fair	453	NO PARKING THIS SIDE OF STREET	18	24	8		0	4	8	TSJ	E 4TH ST	S HAYES AVE	East	Single Post	2x2	Concrete	Right	Steel	8/18/2014	Acceptable	43.8719	-116.499186
809	453	S5-1	W	Aluminum	Engineer Grade	Partially Obscured	Good	454	SCHOOL SPEED LIMIT WHEN FLASHING	24	48	8	20	0	4	1	TSJ	E 4TH ST	S HAYES AVE	East	Single Post	2x2	Concrete	Right	Steel	8/18/2014	Acceptable	43.871871	-116.498455
810	454	S2-1	W	Aluminum	Engineer Grade	Clear	Fair	455		35	36	8		0	0	3	TSJ	E 4TH ST	S HAYES AVE	East	Single Post	2x2	Soil	Right	Steel	8/18/2014	Acceptable	43.871861	-116.498039
811	455	R7-13	W	Aluminum	Engineer Grade	Clear	Fair	456	NO PARKING THIS SIDE OF STREET	18	24	8		0	4	3	TSJ	E 4TH ST	S MCKINLEY AVE	East	Single Post	2x2	Soil	Right	Steel	8/18/2014	Acceptable	43.871841	-116.495504
812	456	S2-1	E	Aluminum	Engineer Grade	Clear	Fair	457		35	36	7		0	0	3	TSJ	E 4TH ST	S MCKINLEY AVE	West	Single Post	2x2	Soil	Right	Steel	8/18/2014	Acceptable	43.871921	-116.495213
813	456	R7-13	E	Aluminum	Engineer Grade	Clear	Poor	457	NO PARKING THIS SIDE OF STREET	18	24	5		0	4	3	TSJ	E 4TH ST	S MCKINLEY AVE	West	Single Post	2x2	Soil	Right	Steel	8/18/2014	Acceptable	43.871921	-116.495213
814	457	R7-13	W	Aluminum	Engineer Grade	Clear	Fair	458	NO PARKING THIS SIDE OF STREET	18	24	7		0	4	3	TSJ	E 4TH ST	S MCKINLEY AVE	East	Single Post	2x2	Soil	Right	Steel	8/18/2014	Acceptable	43.871832	-116.494797
815	458	R7-13	W	Aluminum	Engineer Grade	Clear	Fair	459	NO PARKING THIS SIDE OF STREET	12	18	7		0	3	2	TSJ	E 4TH ST	S HAWTHORNE AVE	East	Single Post	2x2	Soil	Right	Steel	8/18/2014	Acceptable	43.871836	-116.494281
816	459	S5-2	W	Aluminum	Engineer Grade	Clear	Good	460	END SCHOOL ZONE	24	30	8		0	4	3	TSJ	E 4TH ST	S HAWTHORNE AVE	East	Single Post	2x2	Soil	Right	Steel	8/18/2014	Acceptable	43.871824	-116.494032
817	460	S5-1	E	Aluminum	Engineer Grade	Partially Obscured	Good	461	SCHOOL SPEED LIMIT WHEN FLASHING	24	48	8	20	0	0	3	TSJ	E 4TH ST	S HAWTHORNE AVE	West	Single Post	2x2	Soil	Right	Steel	8/18/2014	Acceptable	43.871912	-116.494113
818	461	R7-13	W	Aluminum	Engineer Grade	Clear	Fair	462	NO PARKING THIS SIDE OF STREET	18	24	5		0	4	3	TSJ	E 4TH ST	S HAWTHORNE	East	Single Post	2in. Channel	Soil	Right	Steel	8/18/2014	Acceptable	43.871808	-116.493361
819	462	D3	S	Aluminum	Engineer Grade	Clear	Good	463	E 3RD ST	6	24	10		0	4	3	TSJ	E 3RD ST	S WASHINGTON AVE	West	Single Post	2x2	Soil	Right	Steel	8/18/2014	Acceptable	43.872659	-116.499874
820	462	D3	E	Aluminum	Engineer Grade	Clear	Good	463	S WASHINGTON AVE	6	24	10		0	4	3	TSJ	E 3RD ST	S WASHINGTON AVE	West	Single Post	2x2	Soil	Right	Steel	8/18/2014	Acceptable	43.872659	-116.499874
821	462	R1-1	E	Aluminum	Engineer Grade	Clear	Good	463	STOP	30	30	8		0	10	3	TSJ	E 3RD ST	S WASHINGTON AVE	West	Single Post	2x2	Soil	Right	Steel	8/18/2014	Acceptable	43.872659	-116.499874
822	463	D3	E	Aluminum	Engineer Grade	Clear	Good	464	S WASHINGTON AVE	6	24	10		0	4	3	TSJ	E 2ND ST	S WASHINGTON AVE	West	Single Post	2x2	Soil	Right	Steel	8/18/2014	Acceptable	43.873668	-116.499926
823	463	D3	S	Aluminum	Engineer Grade	Clear	Good	464	E 2ND ST	6	24	10		0	4	3	TSJ	E 2ND ST	S WASHINGTON AVE	West	Single Post	2x2	Soil	Right	Steel	8/18/2014	Acceptable	43.873668	-116.499926
824	463	R1-1	E	Aluminum	Engineer Grade	Clear	Good	464	STOP	30	30	8		0	10	3	TSJ	E 2ND ST	S WASHINGTON AVE	West	Single Post	2x2	Soil	Right	Steel	8/18/2014	Acceptable	43.873668	-116.499926
825	464	R7-1	E	Aluminum	Engineer Grade	Clear	Replace	465	NO PARKING ANY TIME	12	18	7		0	3	3	TSJ	E 2ND ST	S HAYES AVE	West	Single Post	2x2	Soil	Right	Steel	8/18/2014	Acceptable	43.873674	-116.499522
826	465	R7-1	E	Aluminum	Engineer Grade	Clear	Poor	466	NO PARKING ANY TIME	12	18	7		0	3	3	TSJ	E 2ND ST	S HAYES AVE	West	Single Post	2x2	Soil	Right	Steel	8/18/2014	Acceptable	43.873661	-116.498826
827	466	R7-13A	E	Aluminum	Engineer Grade	Clear	Replace	466	NO PARKING THIS SIDE	12	18	6		0	3	3	TSJ	E 1ST ST	S WASHINGTON AVE	West	Single Post	3in. Tube	Soil	Right	Steel	8/18/2014	Acceptable	43.87466	-116.499438
828	467	R7-13	E	Aluminum	Engineer Grade	Clear	Good	468	NO PARKING THIS SIDE OF STREET	12	18	5		0	3	3	TSJ	E 1ST ST	S WASHINGTON AVE	West	Single Post	2x2	Soil	Right	Steel	8/18/2014	Acceptable	43.874664	-116.49976
829	468	D3	E	Aluminum	Engineer Grade	Clear	Good	469	S WASHINGTON AVE	6	24	10		0	4	3	TSJ	E 1ST ST	S WASHINGTON AVE	West	Single Post	2x2	Soil	Right	Steel	8/18/2014	Acceptable	43.874648	-116.499975
830	468	D3	S	Aluminum	Engineer Grade	Clear	Good	469	E 1ST ST	6	24	10		0	4	3	TSJ	E 1ST ST	S WASHINGTON AVE	West	Single Post	2x2	Soil	Right	Steel	8/18/2014	Acceptable	43.874648	-116.499975
831	468	R1-1	E	Aluminum	Engineer Grade	Clear	Good	469	STOP	30	30	7		0	10	3	TSJ	E 1ST ST	S WASHINGTON AVE	West	Single Post	2x2	Soil	Right	Steel	8/18/2014	Acceptable	43.874648	-116.499975
832	469	R7-1	E	Aluminum	Engineer Grade	Clear	Good	470	NO PARKING ANY TIME	12	18	8		0	3	3	TSJ	E 1ST ST	S WASHINGTON AVE	East	Single Post	2x2	Concrete	Right	Steel	8/18/2014	Acceptable	43.874565	-116.499741
833	470	R7-1	W	Aluminum	Engineer Grade	Clear	Good	471	NO PARKING ANY TIME	12	18	8		0	3	3	TSJ	E 1ST ST	S WASHINGTON AVE	East	Single Post	2x2	Concrete	Right	Steel	8/18/2014	Acceptable	43.874563	-116.499372
834	471	W14-1	N	Aluminum	Engineer Grade	Clear	Good	472	DEAD END	33	33	7		0	6	6	TSJ	PEACH ST	S JOHN'S AVE	West	Single Post	2in. Channel	Soil	Right	Steel	8/19/2014	Acceptable	43.867511	-116.492873
835	472	D3	N	Aluminum	Engineer Grade	Clear	Good	473	S JOHNS	6	24	11		0	4	6	TSJ	PEACH ST	S JOHN'S AVE	West	Single Post	2x2	Soil	Right	Steel	8/19/2014	Acceptable	43.867376	-116.492844
836	472	D3	N	Aluminum	Engineer Grade	Clear	Good	473	PEACH ST	6	32	11		0	0	6	TSJ	PEACH ST	S JOHN'S AVE	West	Single Post	2x2	Soil	Right	Steel	8/19/2014	Acceptable	43.867376	-116.492844
837	472	R1-1	N	Aluminum	Engineer Grade	Clear	Good	473	STOP	30	30	11		0	10	6	TSJ	PEACH ST	S JOHN'S AVE	West	Single Post	2x2	Soil	Right	Steel	8/19/2014	Acceptable	43.867376	-116.492844
838	473	D3	N	Aluminum	Engineer Grade	Clear	Good	474	LYNN DR	6	24	11		0	0	6	TSJ	LYNN DR	S JOHN'S AVE	West	Single Post	2x2	Soil	Right	Steel	8/19/2014	Acceptable	43.868199	-116.492662
839	473	D3	N	Aluminum	Engineer Grade	Clear	Good	474	S JOHN'S AVE	6	36	11		0	0	6	TSJ	LYNN DR	S JOHN'S AVE	West	Single Post	2x2	Soil	Right	Steel	8/19/2014	Acceptable	43.868199	-116.492662
840	473	R1-1	N	Aluminum	Engineer Grade	Clear	Good	474	STOP	30	30	11		0	10	6	TSJ	LYNN DR	S JOHN'S AVE	West	Single Post	2x2	Soil	Right	Steel	8/19/2014	Acceptable	43.868199	-116.492662
841	474	D3	N	Aluminum	Engineer Grade	Clear	Good	475	E 7TH ST	6	32	11		0	0	6	TSJ	E 7TH ST	S JOHN'S AVE	East	Single Post	2x2	Soil	Right	Steel	8/19/2014	Acceptable	43.868604	-116.492858
842	474	D3	N	Aluminum	Engineer Grade	Clear	Good	475	S JOHN'S AVE	6	36	11		0	0	6	TSJ	E 7TH ST	S JOHN'S AVE	East	Single Post	2x2	Soil	Right	Steel	8/19/2014	Acceptable	43.868604	-116.492858
843	474	R1-1	N	Aluminum	Engineer Grade	Clear	Good	475	STOP	30	30	11		0	10	6	TSJ	E 7TH ST	S JOHN'S AVE	East	Single Post	2x2	Soil	Right	Steel	8/19/2014	Acceptable	43.868604	-116.492858
844	475	D3	N	Aluminum	Engineer Grade	Clear	Good	476	E 7TH ST	6	32	11		0	0	6	TSJ	E 7TH ST	S JOHN'S AVE	West	Single Post	2x2	Soil	Right	Steel	8/19/2014	Acceptable	43.868756	-116.492603
845	475	D3	N	Aluminum	Engineer Grade	Clear	Good	476	S JOHN'S AVE	6	32	11		0	0	6	TSJ	E 7TH ST	S JOHN'S AVE	West	Single Post	2x2	Soil	Right	Steel	8/19/2014	Acceptable	43.868756	-116.492603
846	475	R1-1	N	Aluminum	Engineer Grade	Clear	Good	476	STOP	30	30	11		0	10	6	TSJ	E 7TH ST	S JOHN'S AVE	West	Single Post	2x2	Soil	Right	Steel	8/19/2014	Acceptable	43.868756	-116.492603
847	476	R1-1	N	Aluminum	Engineer Grade	Clear	Good	477	STOP	30	30	9		0	10	6	TSJ	E 6TH ST	S JOHNS AVE	West	Single Post	2x2	Soil	Right	Steel	8/19/2014	Acceptable	43.869866	-116.49261
848	477	D3	N	Aluminum	Engineer Grade	Clear	Good	478	S JOHN'S AVE	6	32	11		0	0	6	TSJ	E 6TH ST	S JOHN'S AVE	East	Single Post	2x2	Soil	Right	Steel	8/19/2014	Acceptable	43.869656	-116.492843
849	477	D3	N	Aluminum	Engineer Grade	Clear	Good	478	E 5TH ST	6	32	11		0	0	6	TSJ	E 6TH ST	S JOHN'S AVE	East	Single Post	2x2	Soil	Right	Steel	8/19/2014	Acceptable	43.869656	-116.492843
850	477	R1-1	N	Aluminum	Engineer Grade	Clear	Fair	478	STOP	30	30	11		0	10	6	TSJ	E 6TH ST	S JOHN'S AVE	East	Single Post	2x2	Soil	Right	Steel	8/19/2014	Acceptable	43.869656	-116.492843
851	478	R2-1-25	N	Aluminum	Engineer Grade	Clear	Good	479		18	24	8		0	0	10	TSJ	S JOHN'S AVE	E 6TH ST	South	Single Post	2x2	Soil	Right	Steel	8/19/2014	Acceptable	43.870325	-116.49286
852	479	R1-1	N	Aluminum	Engineer Grade	Clear	Good	480	STOP	30	30	8		0	10	3	TSJ	E 5TH ST	S JOHN'S VE	East	Single Post	2x2	Concrete	Right	Steel	8/19/2014	Acceptable	43.870747	-116.492914
853	480	D3	N	Aluminum	Engineer Grade	Clear	Good	481	3 5TH ST	6	32	11		0	0	5	TSJ	E 5TH ST	S JOHN'S AVE	West	Single Post	2x2	Concrete	Right	Steel	8/19/2014	Acceptable	43.870861	-116.492673
854	480	D3	N	Aluminum	Engineer Grade	Clear	Good	481	S JOHN'S AVE	6	32	11		0	0	5	TSJ	E 5TH ST	S JOHN'S AVE	West	Single Post	2x2	Concrete	Right	Steel	8/19/2014	Acceptable	43.870861	-116.492673

Sign ID	Support ID	MUTCD	Facing	Backing	Face Material	Visibility	Sign Condition	Photo No.	Sign Text	Length (in)	Width (in)	Height (in)	Num. Text	Num. Size (in)	Text Size (in)	Offset (ft)	Inspector	Road Name	Location Desc.	Travel Direction	Post Type	Post Size	Post Base	Post Pos.	Post Mat'l.	Date Insp.	Post Rating	Latitude	Longitude
855	480	R1-1	N	Aluminum	Engineer Grade	Clear	Good	481	STOP	30	30	11		0	10	5	TSJ	E 5TH ST	S JOHN'S AVE	West	Single Post	2x2	Concrete	Right	Steel	8/19/2014	Acceptable	43.870861	-116.492673
856	481	W14-1	W	Aluminum	Engineer Grade	Clear	Fair	482	DEAD END	41	41	8		0	5	5	TSJ	S JOHN'S AVE	ALLEY	North	Single Post	2x2	Soil	Right	Steel	8/19/2014	Acceptable	43.871292	-116.492638
857	482	S2-1	W	Aluminum	Engineer Grade	Clear	Poor	483		35	36	9		0	0	10	TSJ	S JOHNS AVE	ALLEY	North	Single Post	2x2	Soil	Right	Steel	8/19/2014	Acceptable	43.871292	-116.492668
858	482	R2-1-20	W	Aluminum	Engineer Grade	Clear	Poor	483	SPEED LIMIT	24	30	8	20	10	4	10	TSJ	S JOHNS AVE	ALLEY	North	Single Post	2x2	Soil	Right	Steel	8/19/2014	Acceptable	43.871292	-116.492668
859	483	R1-1	W	Aluminum	Engineer Grade	Clear	Good	484	STOP	30	30	11		0	10	5	TSJ	E 4TH ST	S JOHN'S AVE	East	Single Post	2x2	Soil	Right	Steel	8/19/2014	Acceptable	43.871792	-116.492874
860	484	D3	W	Aluminum	Engineer Grade	Clear	Good	485	E 4TH ST	6	32	11		0	0	7	TSJ	E 4TH ST	S JOHN'S AVE	West	Single Post	2x2	Soil	Right	Steel	8/19/2014	Acceptable	43.871916	-116.492639
861	484	D3	W	Aluminum	Engineer Grade	Clear	Good	485		6	32	11		0	0	7	TSJ	E 4TH ST	S JOHN'S AVE	West	Single Post	2x2	Soil	Right	Steel	8/19/2014	Acceptable	43.871916	-116.492639
862	484	R1-1	W	Aluminum	Engineer Grade	Clear	Good	485	STOP	30	30	11		0	10	7	TSJ	E 4TH ST	S JOHN'S AVE	West	Single Post	2x2	Soil	Right	Steel	8/19/2014	Acceptable	43.871916	-116.492639
863	485	R16-X12	W	Aluminum	Engineer Grade	Clear	Good	486	STATE LAW YIELD TO PEDESTRIANS WITHIN CROSSWALK	6	36	1		0	0	7	TSJ	S JOHN'S AVE	E 4TH ST	North	Single Post	Unknown	Portable	Center	Steel	8/19/2014	Acceptable	43.871626	-116.492744
864	486	R16-X12	W	Aluminum	Engineer Grade	Clear	Fair	487		6	36	1		0	0	7	TSJ	E 4TH ST	S JOHN'S AVE	West	Single Post	Unknown	Soil	Center	Steel	8/19/2014	Acceptable	43.871836	-116.492413
865	487	R7-1	W	Aluminum	Engineer Grade	Clear	Good	488		12	18	5		0	0	3	TSJ	S JOHN'S AVE	E 4TH ST	South	Single Post	2x2	Soil	Right	Steel	8/19/2014	Acceptable	43.872001	-116.492835
866	488	R7-1	W	Aluminum	Engineer Grade	Partially Obscured	Fair	489	NO PARKING ANY TIME	12	18	7		0	3	5	TSJ	S JOHNS AVE	E 4TH ST	North	Single Post	2x2	Soil	Right	Steel	8/19/2014	Repair	43.872231	-116.492713
867	489	R7-1	W	Aluminum	Engineer Grade	Clear	Replace	490		12	18	5		0	0	5	TSJ	S JOHN'S AVE	E 3RD ST	South	Single Post	2x2	Soil	Right	Steel	8/19/2014	Acceptable	43.872483	-116.492827
868	490	R7-1	W	Aluminum	Engineer Grade	Clear	Poor	491	NO PARKING ANY TIME	12	18	8		0	3	8	TSJ	S JOHN'S AVE	E 3RD ST	North	Single Post	2x2	Soil	Right	Steel	8/19/2014	Acceptable	43.87285	-116.492709
869	491	D3	W	Aluminum	Engineer Grade	Clear	Good	492	E 3RD ST	6	32	10		0	0	3	TSJ	E 3RD ST	S JOHN'S AVE	West	Single Post	2x2	Concrete	Right	Steel	8/19/2014	Acceptable	43.872765	-116.492654
870	491	D3	W	Aluminum	Engineer Grade	Clear	Good	492	S JOHN'S AVE	6	32	10		0	0	3	TSJ	E 3RD ST	S JOHN'S AVE	West	Single Post	2x2	Concrete	Right	Steel	8/19/2014	Acceptable	43.872765	-116.492654
871	491	R1-1	W	Aluminum	Engineer Grade	Clear	Good	492	STOP	30	30	10		0	10	3	TSJ	E 3RD ST	S JOHN'S AVE	West	Single Post	2x2	Concrete	Right	Steel	8/19/2014	Acceptable	43.872765	-116.492654
872	492	R1-1	W	Aluminum	Engineer Grade	Clear	Good	493	STOP	30	30	10		0	10	5	TSJ	E 3RD ST	S JOHN'S AVE	East	Single Post	2x2	Concrete	Right	Steel	8/19/2014	Acceptable	43.87266	-116.492903
873	493	R7-1	W	Aluminum	Engineer Grade	Clear	Replace	494		12	18	4		0	0	2	TSJ	S JOHN'S AVE	E 2ND ST	South	Single Post	2x2	Soil	Right	Steel	8/19/2014	Acceptable	43.87338	-116.492817
874	494	R2-1-20	W	Aluminum	Engineer Grade	Clear	Good	494	SPEED LIMIT	18	24	9	20	10	4	2	TSJ	S JOHN'S AVE	E 2ND ST	South	Single Post	2x2	Soil	Right	Steel	8/19/2014	Acceptable	43.873205	-116.492817
875	495	R7-1	W	Aluminum	Engineer Grade	Clear	Good	496	NO PARKING ANY TIME	12	18	8		0	3	3	TSJ	S JOHN'S AVE	E 2ND ST	North	Single Post	2x2	Soil	Right	Steel	8/19/2014	Acceptable	43.873289	-116.492698
876	496	R1-1	W	Aluminum	Engineer Grade	Clear	Good	497	STOP	30	30	11		0	10	3	TSJ	E 2ND ST	S JOHN'S AVE	East	Single Post	2x2	Concrete	Right	Steel	8/19/2014	Acceptable	43.87359	-116.492887
877	497	D3	S	Aluminum	Engineer Grade	Clear	Good	498	E 2ND ST	6	32	8		0	0	5	TSJ	E 2ND ST	S JOHN'S AVE	West	Single Post	2x2	Soil	Right	Steel	8/19/2014	Acceptable	43.873673	-116.492667
878	497	D3	E	Aluminum	Engineer Grade	Clear	Good	498	S JOHN'S AVE	6	32	8		0	0	5	TSJ	E 2ND ST	S JOHN'S AVE	West	Single Post	2x2	Soil	Right	Steel	8/19/2014	Acceptable	43.873673	-116.492667
879	497	R1-1	W	Aluminum	Engineer Grade	Clear	Good	498	STOP	30	30	8		0	10	5	TSJ	E 2ND ST	S JOHN'S AVE	West	Single Post	2x2	Soil	Right	Steel	8/19/2014	Acceptable	43.873673	-116.492667
880	498	R7-1	E	Aluminum	Engineer Grade	Clear	Good	499	NO PARKING ANY TIME	12	18	7		0	3	3	TSJ	S JOHN'S AVE	E 2ND ST	North	Single Post	2x2	Concrete	Right	Steel	8/19/2014	Acceptable	43.873858	-116.492672
881	499	R7-1	E	Aluminum	Engineer Grade	Clear	Replace	500		12	18	5		0	0	2	TSJ	S JOHN'S AVE	E 2ND ST	South	Single Post	2x2	Soil	Right	Steel	8/19/2014	Acceptable	43.873981	-116.492844
882	500	R7-1	E	Aluminum	Engineer Grade	Clear	Fair	501	NO PARKING ANY TIME	12	18	10		0	3	5	TSJ	S JOHN'S AVE	E 1ST ST	North	Single Post	2x2	Concrete	Right	Steel	8/19/2014	Repair	43.874264	-116.492709
883	501	R7-1	E	Aluminum	Engineer Grade	Clear	Replace	502		12	18	5		0	0	2	TSJ	S JOHN'S AVE	E 1ST ST	South	Single Post	2x2	Soil	Right	Steel	8/19/2014	Acceptable	43.874423	-116.492836
884	502	S1-1	E	Aluminum	Engineer Grade	Clear	Good	503		35	36	9		0	0	2	TSJ	S JOHN'S AVE	E 1ST ST	South	Single Post	2x2	Concrete	Right	Steel	8/19/2014	Acceptable	43.874524	-116.49283
885	502	R2-1-20	E	Aluminum	Engineer Grade	Clear	Replace	502	SPEED LIMIT	18	24	9	20	10	4	2	TSJ	S JOHN'S AVE	E 1ST ST	South	Single Post	2x2	Concrete	Right	Steel	8/19/2014	Acceptable	43.874524	-116.49283
886	503	R1-1	E	Aluminum	Engineer Grade	Clear	Good	504	STOP	30	30	8		0	10	5	TSJ	E 1ST ST	S JOHN'S AVE	East	Single Post	2x2	Concrete	Right	Steel	8/19/2014	Acceptable	43.874581	-116.492905
887	504	D3	E	Aluminum	Engineer Grade	Clear	Good	505	E ST ST	6	32	8		0	0	5	TSJ	E 1ST ST	S JOHNS AVE	West	Single Post	2x2	Concrete	Right	Steel	8/19/2014	Acceptable	43.874698	-116.492665
888	504	D3	E	Aluminum	Engineer Grade	Clear	Good	505	S JOHN'S AVE	6	32	8		0	0	5	TSJ	E 1ST ST	S JOHNS AVE	West	Single Post	2x2	Concrete	Right	Steel	8/19/2014	Acceptable	43.874698	-116.492665
889	504	R1-1	E	Aluminum	Engineer Grade	Clear	Good	505	STOP	30	30	8		0	10	5	TSJ	E 1ST ST	S JOHNS AVE	West	Single Post	2x2	Concrete	Right	Steel	8/19/2014	Acceptable	43.874698	-116.492665
890	505	R16-X12	E	Aluminum	Engineer Grade	Clear	Good	506	PUBLIC SWIMMING POOL	18	24	5		0	0	5	TSJ	S JOHN'S AVE	E 1ST ST	North	Single Post	2x2	Concrete	Right	Steel	8/19/2014	Acceptable	43.874752	-116.492711
891	505	R16-X12	E	Aluminum	Engineer Grade	Clear	Good	506	EMMETT POLICE DEPARTMENT 501 E MAIN	18	24	6		0	0	5	TSJ	S JOHN'S AVE	E 1ST ST	North	Single Post	2x2	Concrete	Right	Steel	8/19/2014	Acceptable	43.874752	-116.492711
892	506	R7-1	E	Aluminum	Engineer Grade	Clear	Replace	507	NO PARKING ANY TIME	12	18	7		0	3	5	TSJ	S JOHN'S AVE	E 1ST ST	North	Single Post	2x2	Soil	Right	Steel	8/19/2014	Acceptable	43.874777	-116.492715
893	507	R7-1	E	Aluminum	Engineer Grade	Clear	Good	508	NO PARKING ANY TIME	12	18	8		0	3	5	TSJ	S JOHNS AVE	E MAIN ST	North	Single Post	2x2	Concrete	Right	Steel	8/19/2014	Acceptable	43.875223	-116.492732
894	508	R7-1	E	Aluminum	Engineer Grade	Partially Obscured	Good	507	NO PARKING ANY TIME	18	24	8		0	3	2	TSJ	S JOHN'S AVE	E MAIN ST	North	Single Post	2x2	Concrete	Right	Steel	8/19/2014	Acceptable	43.875398	-116.492718
895	509	R16-X12	E	Aluminum	Engineer Grade	Clear	Good	510	STAE LAW YILD TO PEDESTRIANS WITHIN CROSSWALK	12	36	1		0	0	0	TSJ	S JOHNS AVE	E MAIN ST	North	Single Post	2x2	Portable	Center	Steel	8/19/2014	Acceptable	43.875529	-116.492791
896	510	D3	E	Aluminum	Engineer Grade	Clear	Good	511	S JOHN'S AVE	6	32	10		0	0	5	TSJ	S JOHN'S AVE	E MAIN ST	North	Single Post	2x2	Soil	Right	Steel	8/19/2014	Acceptable	43.875522	-116.49273
897	510	D3	E	Aluminum	Engineer Grade	Clear	Good	511	E MAIN ST	6	32	10		0	0	5	TSJ	S JOHN'S AVE	E MAIN ST	North	Single Post	2x2	Soil	Right	Steel	8/19/2014	Acceptable	43.875522	-116.49273
898	510	R1-1	E	Aluminum	Engineer Grade	Clear	Good	511	STOP	30	30	10		0	10	5	TSJ	S JOHN'S AVE	E MAIN ST	North	Single Post	2x2	Soil	Right	Steel	8/19/2014	Acceptable	43.875522	-116.49273
899	511	R3-4	E	Aluminum	Engineer Grade	Clear	Good	512	NO U TURN	18	24	7		0	0	5	TSJ	S JOHN'S AVE	E MAIN ST	North	Single Post	2x2	Soil	Left	Steel	8/19/2014	Acceptable	43.87571	-116.492896
900	512	R16-X12	E	Aluminum	Engineer Grade	Clear	Good	513	NO UNAUTHORIZED MOTOR VEHICLES ALLOWED IN PARK	18	24	7		0	0	5	TSJ	S JOHN'S AVE	E MAIN ST	North	Single Post	2x2	Concrete	Left	Steel	8/19/2014	Acceptable	43.87574	-116.492904
901	512	R16-X12	E	Aluminum	Engineer Grade	Clear	Good	513	NO SKATEBOARDING ALLOWED IN PARK	18	24	7		0	0	5	TSJ	S JOHN'S AVE	E MAIN ST	North	Single Post	2x2	Concrete	Left	Steel	8/19/2014	Acceptable	43.87574	-116.492904
902	513	D3	E	Aluminum	Engineer Grade	Clear	Good	514	E MAIN ST	6	24	8		0	4	5	TSJ	N JOHN'S AVE	E MAIN ST	South	Single Post	2x2	Soil	Right	Steel	8/19/2014	Acceptable	43.875735	-116.492879
903	513	D3	E	Aluminum	Engineer Grade	Clear	Good	514	N JOHN'S AVE	6	32	8		0	0	5	TSJ	N JOHN'S AVE	E MAIN ST	South	Single Post	2x2	Soil	Right	Steel	8/19/2014	Acceptable	43.875735	-116.492879
904	513	R1-1	E	Aluminum	Engineer Grade	Clear	Good	514	STOP	30	30	8		0	10	5	TSJ	N JOHN'S AVE	E MAIN ST	South	Single Post	2x2	Soil	Right	Steel	8/19/2014	Acceptable	43.875735	-116.492879
905	514	R16-X12	E	Aluminum	Engineer Grade	Clear	Good	515	NO UNAUTHORIZED MOTOR VEHICLES ALLOWED IN PARK	18	24	5		0	0	3	TSJ	N JOHN'S AVE	E PARK ST	North	Single Post	2x2	Concrete	Left	Steel	8/19/2014	Acceptable	43.877293	-116.492848
906	514	R16-X12	E	Aluminum	Engineer Grade	Clear	Good	515	NO SKATEBOARDING ALLOWED IN PARK	18	24	7		0	0	3	TSJ	N JOHN'S AVE	E PARK ST	North	Single Post	2x2	Concrete	Left	Steel	8/19/2014	Acceptable	43.877293	-116.492848
907	515	D3	E	Aluminum	Engineer Grade	Clear	Good	516	E PARK ST	6	32	9		0	0	5	TSJ	E PARK ST	N JOHN'S AVE	West	Single Post	2x2	Soil	Right	Steel	8/19/2014	Acceptable	43.877313	-116.492705
908	515	D3	E	Aluminum	Engineer Grade	Clear	Good	516	N JOHN'S AVE	6	32	9		0	0	5	TSJ	E PARK ST	N JOHN'S AVE	West	Single Post	2x2	Soil	Right	Steel	8/19/2014	Acceptable	43.877313	-116.492705
909	515	R1-1	E	Aluminum	Engineer Grade	Clear	Poor	516	STOP	30	30	9		0	10	5	TSJ	E PARK ST	N JOHN'S AVE	West	Single Post	2x2	Soil	Right	Steel	8/19/2014	Acceptable	43.877313	-116.492705
910	516	D3	E	Aluminum	Engineer Grade	Clear	Good	517	N JOHN'S AVE	6	32	9		0	0	5	TSJ	DEWEY ST	N JOHN'S AVE	East	Single Post	2x2	Concrete	Right	Steel	8/19/2014	Acceptable	43.878097	-116.492952
911	516	D3	E	Aluminum	Engineer Grade	Clear	Good	517	DEWEY ST	6	32	9		0	0	5	TSJ	DEWEY ST	N JOHN'S AVE	East	Single Post	2x2	Concrete	Right	Steel	8/19/2014	Acceptable	43.878097	-116.492952
912	516	R1-1	E	Aluminum	Engineer Grade	Clear	Good	517	STOP	30	30	9		0	10	5	TSJ	DEWEY ST	N JOHN'S AVE	East	Single Post	2x2	Concrete	Right	Steel	8/19/2014	Acceptable	43.878097	-116.492952
913	517	D3	E	Aluminum	Engineer Grade	Clear	Good	518	LOCUST ST	6	32	11		0	0	5	TSJ	N JOHNS AVE	LOCUST ST	North	Single Post	2x2	Soil	Left	Steel	8/19/2014	Acceptable	43.878698	-116.492868
914	517	D3	E	Aluminum	Engineer Grade	Clear	Good	518	N JOHNS AVE	6	32	11		0	0	5	TSJ	N JOHNS AVE	LOCUST ST	North	Single Post	2x2	Soil	Left	Steel	8/19/2014	Acceptable	43.878698	-116.492868
915	518	D3	E	Aluminum	Engineer Grade	Clear	Fair	519	N JOHN'S AVE	6	24	11		0	0	5	TSJ	S JOHN'S AVE	E LOCUST ST	South	Single Post	2x2	Soil	Right	Steel	8/19/2014	Repair	43.879173	-116.492953
916	518	D3	E	Aluminum	Engineer Grade	Clear	Good	519	E LOCUST	6	24	11		0	0	5	TSJ	S JOHN'S AVE	E LOCUST ST	South	Single Post	2x2	Soil	Right	Steel	8/19/2014	Repair	43.879173	-116.492953
917	518	R1-1	E	Aluminum	Engineer Grade	Clear	Poor	519	STOP	30	30	11		0	10	5	TSJ	S JOHN'S AVE	E LOCUST ST	South	Single Post	2x2	Soil	Right	Steel	8/19/2014	Repair	43.879173	-116.492953
918	519	R5-1	E	Aluminum	Engineer Grade	Clear	Fair	520		36	36	6		0	0	5	TSJ	DEWEY ST	PARK	South	Single Post	2x2	Soil	Right	Steel	8/19/2014	Acceptable	43.87713	-116.495965
919	520	D3	E	Aluminum	Engineer Grade	Clear	Good	521	N MCKINLEY AVE	6	32	9		0	0	5	TSJ	E PARK ST	N MCKINLEY AVE	East	Single Post	2x2	Soil	Right	Steel	8/19/2014	Acceptable	43.876549	-116.495939
920	520	D3	E	Aluminum	Engineer Grade	Clear	Good	521	E PARK ST	6	32	9		0	0	5	TSJ	E PARK ST	N MCKINLEY AVE	East	Single Post	2x2	Soil	Right	Steel	8/19/2014	Acceptable	43.876549	-116.495939
921	520	R1-1	E	Aluminum	Engineer Grade	Clear	Good	521	STOP	30	30	9		0	10	5	TSJ	E PARK ST	N MCKINLEY AVE	East	Single Post	2x2	Soil	Right	Steel	8/19/2014	Acceptable	43.876549	-116.495939
922	521	R1-1	E	Aluminum	Engineer Grade	Clear	Good	522	STOP	30	30	7		0	10	5	TSJ	N WARDWELL AVE	E PARK ST	South	Single Post	2x2	Soil	Right	Steel	8/19/2014	Acceptable	43.876733	-116.497367
923	522	D3	E	Aluminum	Engineer Grade	Clear	Good	523	E PARK ST	6	24	8		0	0	5	TSJ	N WARDWELL AVE	E PARK ST	North	Single Post	2x2	Soil	Right	Steel	8/19/2014	Acceptable	43.876536	-116.497154
924	522	D3	E	Aluminum	Engineer Grade	Clear	Good	523	N WARDWELL AVE	6	24	8		0	0	5	TSJ	N WARDWELL AVE	E PARK ST	North	Single Post	2x2	Soil	Right	Steel	8/19/2014	Acceptable	43.876536	-116.497154
925	522	R1-1	E	Aluminum	Engineer Grade	Clear	Good	523	STOP	30	30	8		0	10	5	TSJ	N WARDWELL AVE	E PARK ST	North	Single Post	2x2	Soil	Right	Steel	8/19/2014	Acceptable	43.876536	-116.497154
926	523	D3	E	Aluminum	Engineer Grade	Clear	Good	524	E PARK ST	6	24	11		0	0	5	TSJ	N HAYES AVE	E PARK ST	North	Single Post	2x2	Concrete	Right	Steel	8/19/2014	Acceptable	43.876487	-116.498579
927	523	D3	E	Aluminum	Engineer Grade	Clear	Good	524	N HAYES ST	6	244	11		0	0	5	TSJ	N HAYES AVE	E PARK ST	North	Single Post	2x2	Concrete	Right	Steel	8/19/2014	Acceptable	43.876487	-116.498579

Sign ID	Support ID	MUTCD	Facing	Backing	Face Material	Visibility	Sign Condition	Photo No.	Sign Text	Length (in)	Width (in)	Height (in)	Num. Text	Num. Size (in)	Text Size (in)	Offset (ft)	Inspector	Road Name	Location Desc.	Travel Direction	Post Type	Post Size	Post Base	Post Pos.	Post Mat'l.	Date Insp.	Post Rating	Latitude	Longitude
928	523	R1-1	E	Aluminum	Engineer Grade	Clear	Good	524	STOP	30	30	11		0	10	5	TSJ	N HAYES AVE	E PARK ST	North	Single Post	2x2	Concrete	Right	Steel	8/19/2014	Acceptable	43.876487	-116.498579
929	523	R16-X12	W	Aluminum	Engineer Grade	Clear	Good	524	2 HOUR PARKING 8:00 AM TO 5:00 PM	12	18	6		0	0	5	TSJ	N HAYES AVE	E PARK ST	North	Single Post	2x2	Concrete	Right	Steel	8/19/2014	Acceptable	43.876487	-116.498579
930	524	R16-X12	W	Aluminum	Engineer Grade	Clear	Good	524	2 HOUR PARKING 8:00AM TO 5:00 PM	12	18	6		0	0	5	TSJ	N HAYES ST	E PARK ST	North	Single Post	2x2	Concrete	Left	Steel	8/19/2014	Acceptable	43.876464	-116.498809
931	525	D3	W	Aluminum	Engineer Grade	Clear	Good	526	E PARK ST	6	24	10		0	4	5	TSJ	E PARK ST	N WASHINGTON AVE	West	Single Post	2x2	Soil	Right	Steel	8/19/2014	Acceptable	43.87663	-116.499902
932	525	D3	W	Aluminum	Engineer Grade	Clear	Good	526	N WASHINGTON AVE	6	36	11		0	0	5	TSJ	E PARK ST	N WASHINGTON AVE	West	Single Post	2x2	Soil	Right	Steel	8/19/2014	Acceptable	43.87663	-116.499902
933	525	R1-1	W	Aluminum	Engineer Grade	Clear	Good	526	STOP	30	30	9		0	10	5	TSJ	E PARK ST	N WASHINGTON AVE	West	Single Post	2x2	Soil	Right	Steel	8/19/2014	Acceptable	43.87663	-116.499902
934	525	R16-X12	W	Aluminum	Engineer Grade	Clear	Fair	526	PARKING -->	12	18	5		0	0	5	TSJ	E PARK ST	N WASHINGTON AVE	West	Single Post	2x2	Soil	Right	Steel	8/19/2014	Acceptable	43.87663	-116.499902
935	526	D3	W	Aluminum	Engineer Grade	Clear	Good	527	E PARK ST	6	32	8		0	0	5	TSJ	E PARK ST	N WASHINGTON AVE	East	Single Post	2x2	Concrete	Right	Steel	8/19/2014	Acceptable	43.876496	-116.500185
936	526	D3	W	Aluminum	Engineer Grade	Clear	Good	527	N WASHINGTONAVE	6	36	11		0	0	5	TSJ	E PARK ST	N WASHINGTON AVE	East	Single Post	2x2	Concrete	Right	Steel	8/19/2014	Acceptable	43.876496	-116.500185
937	526	R1-1	W	Aluminum	Engineer Grade	Clear	Good	527	STOP	30	30	11		0	10	5	TSJ	E PARK ST	N WASHINGTON AVE	East	Single Post	2x2	Concrete	Right	Steel	8/19/2014	Acceptable	43.876496	-116.500185
938	527	D3	W	Aluminum	Engineer Grade	Clear	Good	528	N COMMERCIAL AVE	6	32	10		0	0	3	TSJ	N COMMERCIAL AVE	W PARK ST	North	Single Post	2x2	Concrete	Right	Steel	8/19/2014	Acceptable	43.876223	-116.501299
939	527	D3	W	Aluminum	Engineer Grade	Clear	Good	528	W PARK ST	6	32	10		0	0	3	TSJ	N COMMERCIAL AVE	W PARK ST	North	Single Post	2x2	Concrete	Right	Steel	8/19/2014	Acceptable	43.876223	-116.501299
940	527	R7-1	W	Aluminum	Engineer Grade	Clear	Good	528	NO PARKING ANY TIME	12	18	10		0	3	3	TSJ	N COMMERCIAL AVE	W PARK ST	North	Single Post	2x2	Concrete	Right	Steel	8/19/2014	Acceptable	43.876223	-116.501299
941	528	R16-X12	W	Aluminum	Engineer Grade	Clear	Good	528	NO PARKING TRUCKS OR TRAILERS IN THIS BLOCK	12	24	7		0	0	3	TSJ	N COMMERCIAL AVE	W PARK ST	South	Single Post	2x2	Soil	Right	Steel	8/19/2014	Acceptable	43.876071	-116.501529
942	529	D3	W	Aluminum	Engineer Grade	Clear	Good	530	N COMMERCIAL AVE	6	36	9		0	0	5	TSJ	N COMMERCIAL ST	W MAIN ST	South	Single Post	2x2	Concrete	Right	Steel	8/19/2014	Acceptable	43.875754	-116.501564
943	529	D3	W	Aluminum	Engineer Grade	Clear	Good	530	W MAIN ST	6	24	9		0	0	5	TSJ	N COMMERCIAL ST	W MAIN ST	South	Single Post	2x2	Concrete	Right	Steel	8/19/2014	Acceptable	43.875754	-116.501564
944	529	R1-1	W	Aluminum	Engineer Grade	Clear	Good	530	STOP	36	36	10		0	10	5	TSJ	N COMMERCIAL ST	W MAIN ST	South	Single Post	2x2	Concrete	Right	Steel	8/19/2014	Acceptable	43.875754	-116.501564
945	530	R16-X12	W	Aluminum	Engineer Grade	Clear	Good	531	2 HOUR PARKING 8:00 AM TO 5:00 PM -->	12	18	8		0	0	5	TSJ	N HAYES AVE	E MAIN ST	South	Single Post	2x2	Concrete	Right	Steel	8/19/2014	Acceptable	43.876155	-116.498799
946	531	R16-X12	W	Aluminum	Engineer Grade	Clear	Good	530	2 HOUR PARKING	12	18	8		0	0	5	TSJ	N HAYES ST	E MAIN ST	South	Single Post	2x2	Concrete	Right	Steel	8/19/2014	Acceptable	43.876174	-116.498599
947	532	R16-X12	W	Aluminum	Engineer Grade	Tree Obscured	Fair	532	2 HOUT PARKING 8:00 AM TO 5:00 PM	12	18	8		0	0	5	TSJ	N HAYES ST	E MAIN ST	South	Single Post	3in. Tube	Concrete	Right	Steel	8/19/2014	Acceptable	43.876077	-116.498826
948	533	D3	W	Aluminum	Engineer Grade	Clear	Good	534	E MAIN ST	6	24	8		0	0	5	TSJ	N HAYES ST	E MAIN ST	South	Single Post	2x2	Concrete	Right	Steel	8/19/2014	Acceptable	43.875761	-116.498837
949	533	D3	W	Aluminum	Engineer Grade	Clear	Good	534	N HAYES ST	6	24	8		0	0	5	TSJ	N HAYES ST	E MAIN ST	South	Single Post	2x2	Concrete	Right	Steel	8/19/2014	Acceptable	43.875761	-116.498837
950	533	R1-1	W	Aluminum	Engineer Grade	Clear	Good	534	STOP	30	30	8		0	10	5	TSJ	N HAYES ST	E MAIN ST	South	Single Post	2x2	Concrete	Right	Steel	8/19/2014	Acceptable	43.875761	-116.498837
951	534	R16-X12	W	Aluminum	Engineer Grade	Clear	Replace	535	NO PARKING TRUCKS AND TRAILERS IN THIS BLOCK	12	18	5		0	0	3	TSJ	N HAYES ST	E MAIN ST	North	Single Post	2x2	Soil	Right	Steel	8/19/2014	Acceptable	43.875884	-116.4986
952	534	R7-108	W	Aluminum	Engineer Grade	Clear	Good	535	8:00 AM-6:00 PM	12	18	5		0	0	3	TSJ	N HAYES ST	E MAIN ST	North	Single Post	2x2	Soil	Right	Steel	8/19/2014	Acceptable	43.875884	-116.4986
953	535	W10-1	W	Aluminum	Engineer Grade	Clear	Poor	536		36	36	10		0	0	3	TSJ	WARDWELL	DION ST	South	Single Post	2x2	Concrete	Right	Steel	8/19/2014	Acceptable	43.877806	-116.497848
954	536	OM-3L	W	Aluminum	Engineer Grade	Clear	Good	537		12	36	1		0	0	5	TSJ	WARDWELL	DION ST	South	Single Post	2in. Channel	Soil	Right	Steel	8/19/2014	Acceptable	43.877785	-116.497833
955	537	OM-3R	W	Aluminum	Engineer Grade	Clear	Good	538		12	36	1		0	0	3	TSJ	WARDWELL	DION ST	South	Single Post	2in. Channel	Soil	Left	Steel	8/19/2014	Acceptable	43.877816	-116.497683
956	538	OM-3L	W	Aluminum	Engineer Grade	Clear	Good	539		12	36	1		0	0	3	TSJ	WARDWELL	DION ST	North	Single Post	2in. Channel	Soil	Right	Steel	8/19/2014	Acceptable	43.877715	-116.497638
957	539	OM-3R	W	Aluminum	Engineer Grade	Clear	Good	540		12	36	1		0	0	3	TSJ	WARDWELL	DION ST	North	Single Post	2in. Channel	Soil	Left	Steel	8/19/2014	Acceptable	43.877683	-116.497778
958	540	R1-1	W	Aluminum	Engineer Grade	Clear	Good	541	STOP	30	30	8		0	10	3	TSJ	WARDWELL	DION ST	South	Single Post	4x4	Soil	Right	Wood	8/19/2014	Acceptable	43.877599	-116.497713
959	541	R1-1	W	Aluminum	Engineer Grade	Clear	Poor	542	STOP	36	36	10		0	10	3	TSJ	WARDWELL	RAILROAD CROSSING	North	Single Post	4x6	Soil	Right	Wood	8/19/2014	Acceptable	43.877113	-116.497225
960	542	W10-1	W	Aluminum	Engineer Grade	Clear	Poor	543		36	36	10		0	0	3	TSJ	WARDWELL	E PARK ST	North	Single Post	2x2	Soil	Right	Steel	8/19/2014	Acceptable	43.876818	-116.497186
961	543	D3	W	Aluminum	Engineer Grade	Clear	Good	544	E MAIN ST	6	32	8		0	0	5	TSJ	WARDWELL	E MAIN ST	South	Single Post	2x2	Soil	Right	Steel	8/19/2014	Acceptable	43.875763	-116.497368
962	543	D3	W	Aluminum	Engineer Grade	Clear	Good	544	N WARDWELL AVE	6	32	8		0	0	5	TSJ	WARDWELL	E MAIN ST	South	Single Post	2x2	Soil	Right	Steel	8/19/2014	Acceptable	43.875763	-116.497368
963	543	R1-1	W	Aluminum	Engineer Grade	Clear	Good	544	STOP	30	30	8		0	10	5	TSJ	WARDWELL	E MAIN ST	South	Single Post	2x2	Soil	Right	Steel	8/19/2014	Acceptable	43.875763	-116.497368
964	544	D3	W	Aluminum	Engineer Grade	Clear	Good	545	E MAIN ST	6	32	8		0	0	5	TSJ	MCKINLEY AVE	E MAIN ST	South	Single Post	2x2	Soil	Right	Steel	8/19/2014	Acceptable	43.875756	-116.495912
965	544	D3	W	Aluminum	Engineer Grade	Clear	Good	545	MCKINLEY AVE	6	32	8		0	0	5	TSJ	MCKINLEY AVE	E MAIN ST	South	Single Post	2x2	Soil	Right	Steel	8/19/2014	Acceptable	43.875756	-116.495912
966	544	R1-1	W	Aluminum	Engineer Grade	Clear	Good	545	STOP	30	30	8		0	10	5	TSJ	MCKINLEY AVE	E MAIN ST	South	Single Post	2x2	Soil	Right	Steel	8/19/2014	Acceptable	43.875756	-116.495912
967	545	R16-X12	W	Aluminum	Engineer Grade	Clear	Good	546	15 MINUTE PARKING 8 AM TO 5 PM MON-FRI	12	18	8		0	0	5	TSJ	E MAIN ST	WASHINGTON	East	Single Post	2x2	Soil	Right	Steel	8/19/2014	Acceptable	43.875529	-116.499686
968	545	R16-X12	W	Aluminum	Engineer Grade	Clear	Good	547	NO SKATEBOARDING IN COMMERCIAL AREA	18	24	8		0	0	5	TSJ	E MAIN ST	WASHINGTON	East	Single Post	2x2	Soil	Right	Steel	8/19/2014	Acceptable	43.875529	-116.499686
969	546	R3-4	NW	Aluminum	Engineer Grade	Clear	Poor	548	NO U TURN	12	18	5		0	0	3	TSJ	S WARDWELL AVE	E MAIN ST	South	Single Post	2x2	Soil	Left	Steel	8/19/2014	Acceptable	43.875545	-116.497136
970	547	R2-1-20	NW	Aluminum	Engineer Grade	Clear	Good	549	SPEED LIMIT	18	24	8	20	10	4	3	TSJ	E MAIN ST	N MCKINLEY AVE	East	Single Post	2x2	Soil	Right	Steel	8/19/2014	Acceptable	43.875554	-116.495537
971	548	R16-X12	NW	Aluminum	Engineer Grade	Clear	Good	550	STATE LAW YIELD TO PEDESTRIANS WITHIN CROSSWALK	12	36	1		0	0	0	TSJ	E MAIN ST	N MCKINLEY AVE	East	Single Post	Unknown	Portable	Center	Steel	8/19/2014	Acceptable	43.875613	-116.495682
972	549	R16-X12	W	Aluminum	Engineer Grade	Clear	Good	551	STATE LAW YIELD TO PEDESTRIANS WITHIN CROSSWALK	12	36	1		0	0	0	TSJ	E MAIN ST	MCKINLEY	East	Single Post	Unknown	Portable	Center	Steel	8/19/2014	Acceptable	43.875621	-116.494656
973	550	R16-X12	W	Aluminum	Engineer Grade	Clear	Excellent	552	PUBLIC SWIMMING POOL <--	24	24	8		0	0	8	TSJ	E MAIN ST	POST OFFICE	East	Single Post	2x2	Soil	Right	Steel	8/19/2014	Acceptable	43.875555	-116.493551
974	551	R1-1	W	Aluminum	Engineer Grade	Clear	Good	553	STOP	30	30	8		0	10	5	TSJ	E 1ST ST	S DECLARK AVE	East	Single Post	2x2	Soil	Right	Steel	8/19/2014	Acceptable	43.874568	-116.489112
975	552	D3	W	Aluminum	Engineer Grade	Clear	Good	554	E 1ST ST	6	24	8		0	0	5	TSJ	E 1ST ST	S DECLARK AVE	West	Single Post	2x2	Soil	Right	Steel	8/19/2014	Acceptable	43.874681	-116.488938
976	552	D3	W	Aluminum	Engineer Grade	Clear	Good	554	S DECLARK AVE	6	32	8		0	0	5	TSJ	E 1ST ST	S DECLARK AVE	West	Single Post	2x2	Soil	Right	Steel	8/19/2014	Acceptable	43.874681	-116.488938
977	552	R1-1	W	Aluminum	Engineer Grade	Clear	Good	554	STOP	30	30	8		0	10	5	TSJ	E 1ST ST	S DECLARK AVE	West	Single Post	2x2	Soil	Right	Steel	8/19/2014	Acceptable	43.874681	-116.488938
978	553	D3	W	Aluminum	Engineer Grade	Clear	Good	555	E 1ST ST	6	24	7		0	0	10	TSJ	E 1ST ST	S MOFFATT AVE	West	Single Post	2x2	Soil	Right	Steel	8/19/2014	Acceptable	43.874691	-116.48761
979	553	D3	W	Aluminum	Engineer Grade	Clear	Good	555	S MOFFATT AVE	6	24	7		0	0	10	TSJ	E 1ST ST	S MOFFATT AVE	West	Single Post	2x2	Soil	Right	Steel	8/19/2014	Acceptable	43.874691	-116.48761
980	554	D3	W	Aluminum	Engineer Grade	Clear	Good	556	E 1ST ST	6	24	8		0	0	10	TSJ	E 1ST ST	S BUTTE AVE	West	Single Post	2x2	Soil	Right	Steel	8/19/2014	Acceptable	43.874692	-116.486237
981	554	D3	W	Aluminum	Engineer Grade	Clear	Good	556	S BUTTE AVE	6	24	10		0	0	10	TSJ	E 1ST ST	S BUTTE AVE	West	Single Post	2x2	Soil	Right	Steel	8/19/2014	Acceptable	43.874692	-116.486237
982	554	S4-3	W	Aluminum	Engineer Grade	Clear	Good	556		6	24	8		0	0	10	TSJ	E 1ST ST	S BUTTE AVE	West	Single Post	2x2	Soil	Right	Steel	8/19/2014	Acceptable	43.874692	-116.486237
983	555	D3	W	Aluminum	Engineer Grade	Clear	Good	557	E 1ST ST	6	24	8		0	0	8	TSJ	E 1ST ST	S PINE AVE	East	Single Post	2x2	Soil	Right	Steel	8/19/2014	Acceptable	43.874556	-116.485027
984	555	D3	W	Aluminum	Engineer Grade	Clear	Good	557	S PINE AVE	6	32	8		0	0	8	TSJ	E 1ST ST	S PINE AVE	East	Single Post	2x2	Soil	Right	Steel	8/19/2014	Acceptable	43.874556	-116.485027
985	555	R1-1	W	Aluminum	Engineer Grade	Clear	Good	557	STOP	30	30	8		0	10	8	TSJ	E 1ST ST	S PINE AVE	East	Single Post	2x2	Soil	Right	Steel	8/19/2014	Acceptable	43.874556	-116.485027
986	556	D3	W	Aluminum	Engineer Grade	Clear	Good	558	E 2ND ST	6	24	10		0	4	8	TSJ	E 2ND ST	S PINE ST	East	Single Post	2x2	Soil	Right	Steel	8/19/2014	Acceptable	43.873562	-116.484998
987	556	D3	W	Aluminum	Engineer Grade	Clear	Good	558	S PINE ST	6	32	10		0	0	8	TSJ	E 2ND ST	S PINE ST	East	Single Post	2x2	Soil	Right	Steel	8/19/2014	Acceptable	43.873562	-116.484998
988	556	R1-1	W	Aluminum	Engineer Grade	Clear	Good	558	STOP	30	30	10		0	10	8	TSJ	E 2ND ST	S PINE ST	East	Single Post	2x2	Soil	Right	Steel	8/19/2014	Acceptable	43.873562	-116.484998
989	557	D3	W	Aluminum	Engineer Grade	Clear	Good	559	E 2ND ST	6	18	11		0	0	5	TSJ	E 2ND ST	BUTTE AVE	East	Single Post	2x2	Concrete	Right	Steel	8/19/2014	Acceptable	43.873591	-116.486232
990	557	D3	W	Aluminum	Engineer Grade	Clear	Good	559	BUTTE AVE	6	32	11		0	0	5	TSJ	E 2ND ST	BUTTE AVE	East	Single Post	2x2	Concrete	Right	Steel	8/19/2014	Acceptable	43.873591	-116.486232
991	557	S4-3	W	Aluminum	Engineer Grade	Clear	Good	559		8	24	11		0	0	5	TSJ	E 2ND ST	BUTTE AVE	East	Single Post	2x2	Concrete	Right	Steel	8/19/2014	Acceptable	43.873591	-116.486232
992	558	D3	W	Aluminum	Engineer Grade	Clear	Good	560	S MOFFATT AVE	6	32	9		0	0	5	TSJ	E 2ND ST	S MOFFATT AVE	East	Single Post	2x2	Concrete	Right	Steel	8/19/2014	Acceptable	43.873587	-116.487756
993	558	D3	W	Aluminum	Engineer Grade	Clear	Good	560	E 2ND ST	6	32	10		0	0	5	TSJ	E 2ND ST	S MOFFATT AVE	East	Single Post	2x2	Concrete	Right	Steel	8/19/2014	Acceptable	43.873587	-116.487756
994	559	D3	W	Aluminum	Engineer Grade	Clear	Good	561	S DECLARK AVE	6	32	8		0	0	5	TSJ	E 2ND ST	S DECLARK AVE	West	Single Post	2x2	Soil	Right	Steel	8/19/2014	Acceptable	43.873707	-116.48892
995	559	D3	W	Aluminum	Engineer Grade	Clear	Good	561	E 2ND ST	6	24	10		0	0	5	TSJ	E 2ND ST	S DECLARK AVE	West	Single Post	2x2	Soil	Right	Steel	8/19/2014	Acceptable	43.873707	-116.48892
996	559	R1-1	W	Aluminum	Engineer Grade	Clear	Fair	561	STOP	30	30	10		0	10	5	TSJ	E 2ND ST	S DECLARK AVE	West	Single Post	2x2	Soil	Right	Steel	8/19/2014	Acceptable	43.873707	-116.48892
997	560	R1-1	W	Aluminum	Engineer Grade	Clear	Fair	562	STOP	30	30	8		0	10	5	TSJ	E 2ND ST	S DECLARK AVE	East	Single Post	2x2	Soil	Right	Steel	8/19/2014	Acceptable	43.873599	-116.4891
998	561	D3	W	Aluminum	Engineer Grade	Clear	Good	563	E 2ND ST	6	24	11		0	0	3	TSJ	HAZEL AVE	E 2ND ST	North	Single Post	2x2	Soil	Right	Steel	8/19/2014	Acceptable	43.873588	-116.49059
999	561	D3	W	Aluminum	Engineer Grade	Clear	Good	563	HAZEL AVE	6	24	11		0	0	3	TSJ	HAZEL AVE	E 2ND ST	North	Single Post	2x2	Soil	Right	Steel	8/19/2014	Acceptable	43.873588	-116.49059
1000	561	R1-1	S	Aluminum	Engineer Grade	Clear	Good	563	STOP	24	24	11		0	8	3	TSJ	HAZEL AVE	E 2ND ST	North	Single Post	2x2	Soil	Right	Steel	8/19/2014	Acceptable	43.873588	-116.49059

Sign ID	Support ID	MUTCD	Facing	Backing	Face Material	Visibility	Sign Condition	Photo No.	Sign Text	Length (in)	Width (in)	Height (in)	Num. Text	Num. Size (in)	Text Size (in)	Offset (ft)	Inspector	Road Name	Location Desc.	Travel Direction	Post Type	Post Size	Post Base	Post Pos.	Post Mat'l.	Date Insp.	Post Rating	Latitude	Longitude
1001	562	R1-1	S	Aluminum	Engineer Grade	Clear	Fair	564	STOP	30	30	8		0	10	5	TSJ	E 3RD ST	HAZEL AVE	East	Single Post	2x2	Soil	Right	Steel	8/19/2014	Acceptable	43.872678	-116.490759
1002	563	D3	S	Aluminum	Engineer Grade	Clear	Good	565	HAZEL AVE	6	24	11		0	0	5	TSJ	HAZEL AVE	E 3RD ST	North	Single Post	2x2	Soil	Right	Steel	8/19/2014	Acceptable	43.872644	-116.490566
1003	563	D3	S	Aluminum	Engineer Grade	Clear	Good	565	E 3RD ST	6	24	10		0	0	5	TSJ	HAZEL AVE	E 3RD ST	North	Single Post	2x2	Soil	Right	Steel	8/19/2014	Acceptable	43.872644	-116.490566
1004	563	R1-1	S	Aluminum	Engineer Grade	Clear	Good	565	STOP	24	24	11		0	10	5	TSJ	HAZEL AVE	E 3RD ST	North	Single Post	2x2	Soil	Right	Steel	8/19/2014	Acceptable	43.872644	-116.490566
1005	564	R1-1	S	Aluminum	Engineer Grade	Clear	Good	566	STOP	30	30	8		0	10	5	TSJ	E 3RD ST	HAZEL AVE	West	Single Post	2x2	Soil	Right	Steel	8/19/2014	Acceptable	43.872748	-116.490564
1006	565	R1-1	S	Aluminum	Engineer Grade	Tree Obscured	Poor	567	STOP	30	30	8		0	10	5	TSJ	HAZEL AVE	E 3RD ST	South	Single Post	2in. Channel	Soil	Right	Steel	8/19/2014	Acceptable	43.872808	-116.490687
1007	566	R1-1	S	Aluminum	Engineer Grade	Clear	Good	568	STOP	30	30	9		0	10	5	TSJ	S DECLARK AVE	E 3RD ST	North	Single Post	2x2	Soil	Right	Steel	8/19/2014	Acceptable	43.872654	-116.488957
1008	567	D3	S	Aluminum	Engineer Grade	Clear	Good	569	E 3RD ST	6	18	9		0	0	5	TSJ	S DECLARK AVE	E 3RD ST	South	Single Post	2x2	Soil	Right	Steel	8/19/2014	Acceptable	43.87278	-116.489059
1009	567	D3	S	Aluminum	Engineer Grade	Clear	Good	569	S DECLARK AVE	6	24	9		0	0	5	TSJ	S DECLARK AVE	E 3RD ST	South	Single Post	2x2	Soil	Right	Steel	8/19/2014	Acceptable	43.87278	-116.489059
1010	567	R1-1	S	Aluminum	Engineer Grade	Clear	Fair	569	STOP	24	24	9		0	10	5	TSJ	S DECLARK AVE	E 3RD ST	South	Single Post	2x2	Soil	Right	Steel	8/19/2014	Acceptable	43.87278	-116.489059
1011	568	R1-1	S	Aluminum	Engineer Grade	Clear	Good	570	STOP	30	30	8		0	10	5	TSJ	E 3RD ST	MOFFATT AVE	East	Single Post	2x2	Soil	Right	Steel	8/19/2014	Acceptable	43.872671	-116.487732
1012	569	R1-1	S	Aluminum	Engineer Grade	Clear	Good	571	STOP	30	30	8		0	10	1	TSJ	MOFFATT AVE	3 3RD ST	North	Single Post	2x2	Soil	Right	Steel	8/19/2014	Acceptable	43.872622	-116.48761
1013	570	R1-1	S	Aluminum	Engineer Grade	Clear	Good	572	STOP	30	30	9		0	10	5	TSJ	E 3RD ST	MOFFATT AVE	West	Single Post	2x2	Concrete	Right	Steel	8/19/2014	Acceptable	43.87277	-116.487553
1014	571	D3	S	Aluminum	Engineer Grade	Clear	Good	573	E 3RD ST	6	24	9		0	0	1	TSJ	MOFFATT AVE	E 3RD ST	South	Single Post	2x2	Soil	Right	Steel	8/19/2014	Acceptable	43.872782	-116.487717
1015	571	D3	S	Aluminum	Engineer Grade	Clear	Good	573	MOFFATT AVE	6	24	9		0	0	1	TSJ	MOFFATT AVE	E 3RD ST	South	Single Post	2x2	Soil	Right	Steel	8/19/2014	Acceptable	43.872782	-116.487717
1016	571	R1-1	S	Aluminum	Engineer Grade	Clear	Good	573	STOP	30	30	9		0	10	1	TSJ	MOFFATT AVE	E 3RD ST	South	Single Post	2x2	Soil	Right	Steel	8/19/2014	Acceptable	43.872782	-116.487717
1017	572	R1-1	S	Aluminum	Engineer Grade	Clear	Fair	574	STOP	30	30	9		0	10	1	TSJ	S BUTTE AVE	E 3RD ST	South	Single Post	2x2	Concrete	Right	Steel	8/19/2014	Acceptable	43.8728	-116.486409
1018	573	D3	S	Aluminum	Engineer Grade	Clear	Good	575	S BUTTE AVE	6	24	10		0	4	1	TSJ	S BUTTE AVE	E 3RD ST	North	Single Post	2x2	Soil	Right	Steel	8/19/2014	Acceptable	43.872651	-116.486257
1019	573	D3	S	Aluminum	Engineer Grade	Clear	Good	575	E 3RD ST	6	24	10		0	0	1	TSJ	S BUTTE AVE	E 3RD ST	North	Single Post	2x2	Soil	Right	Steel	8/19/2014	Acceptable	43.872651	-116.486257
1020	573	R1-1	S	Aluminum	Engineer Grade	Clear	Good	575	STOP	24	24	10		0	10	1	TSJ	S BUTTE AVE	E 3RD ST	North	Single Post	2x2	Soil	Right	Steel	8/19/2014	Acceptable	43.872651	-116.486257
1021	574	D3	S	Aluminum	Engineer Grade	Clear	Good	576	E 3RD ST	6	24	10		0	4	1	TSJ	E 3RD ST	S PINE AVE	East	Single Post	2x2	Soil	Right	Steel	8/19/2014	Acceptable	43.872637	-116.485048
1022	574	D3	S	Aluminum	Engineer Grade	Clear	Good	576	S PINE AVE	6	32	10		0	0	1	TSJ	E 3RD ST	S PINE AVE	East	Single Post	2x2	Soil	Right	Steel	8/19/2014	Acceptable	43.872637	-116.485048
1023	574	R1-1	S	Aluminum	Engineer Grade	Clear	Good	576	STOP	30	30	8		0	10	1	TSJ	E 3RD ST	S PINE AVE	East	Single Post	2x2	Soil	Right	Steel	8/19/2014	Acceptable	43.872637	-116.485048
1024	575	D3	S	Aluminum	Engineer Grade	Clear	Good	577	S PINE AVE	6	32	9		0	0	6	TSJ	S PINE AVE	E 4TH ST	North	Single Post	2x2	Soil	Right	Steel	8/19/2014	Acceptable	43.871975	-116.485016
1025	575	D3	S	Aluminum	Engineer Grade	Clear	Good	577	E 3RD ST	6	32	9		0	0	6	TSJ	S PINE AVE	E 4TH ST	North	Single Post	2x2	Soil	Right	Steel	8/19/2014	Acceptable	43.871975	-116.485016
1026	575	R1-1	S	Aluminum	Engineer Grade	Clear	Fair	577	STOP	30	30	9		0	10	6	TSJ	S PINE AVE	E 4TH ST	North	Single Post	2x2	Soil	Right	Steel	8/19/2014	Acceptable	43.871975	-116.485016
1027	576	S2-1	S	Aluminum	Engineer Grade	Clear	Good	578		35	36	10		0	0	6	TSJ	E 4TH ST	S BUTTE AVE	East	Single Post	2x2	Soil	Right	Steel	8/19/2014	Acceptable	43.871786	-116.485975
1028	577	D3	S	Aluminum	Engineer Grade	Clear	Good	579	S BUTTE AVE	6	32	11		0	0	4	TSJ	S BUTTE AVE	E 4TH ST	South	Single Post	3in. Tube	Soil	Right	Steel	8/19/2014	Acceptable	43.871932	-116.486383
1029	577	D3	S	Aluminum	Engineer Grade	Clear	Good	579	E 4TH ST	6	32	11		0	0	4	TSJ	S BUTTE AVE	E 4TH ST	South	Single Post	3in. Tube	Soil	Right	Steel	8/19/2014	Acceptable	43.871932	-116.486383
1030	577	R1-1	S	Aluminum	Engineer Grade	Clear	Good	579	STOP	30	30	7		0	10	4	TSJ	S BUTTE AVE	E 4TH ST	South	Single Post	3in. Tube	Soil	Right	Steel	8/19/2014	Acceptable	43.871932	-116.486383
1031	578	D3	S	Aluminum	Engineer Grade	Clear	Good	580	MEADOW DR	6	24	9		0	0	4	TSJ	MEADOW DR	E 4TH ST	North	Single Post	2x2	Soil	Right	Steel	8/19/2014	Acceptable	43.871747	-116.486486
1032	578	D3	S	Aluminum	Engineer Grade	Clear	Good	580	E 4TH ST	6	32	9		0	0	4	TSJ	MEADOW DR	E 4TH ST	North	Single Post	2x2	Soil	Right	Steel	8/19/2014	Acceptable	43.871747	-116.486486
1033	578	R1-1	S	Aluminum	Engineer Grade	Clear	Good	580	STOP	30	30	9		0	10	4	TSJ	MEADOW DR	E 4TH ST	North	Single Post	2x2	Soil	Right	Steel	8/19/2014	Acceptable	43.871747	-116.486486
1034	579	R2-1-20	S	Aluminum	Engineer Grade	Clear	Fair	581	SPEED LIMIT	18	24	8	20	10	4	84	TSJ	E 4TH ST	MOFFATT AVE	West	Single Post	2in. Channel	Soil	Right	Steel	8/19/2014	Acceptable	43.871916	-116.487348
1035	580	S5-1	S	Aluminum	Engineer Grade	Clear	Good	582	SCHOOL SPEED LIMIT	24	48	8	20	0	0	84	TSJ	E 4TH ST	MOFFAT AVE	East	Single Post	2x2	Soil	Right	Steel	8/19/2014	Acceptable	43.871772	-116.487267
1036	581	D3	E	Aluminum	Engineer Grade	Clear	Good	583	S MOFFAT AVE	6	24	10		0	0	6	TSJ	S MOFFAT AVE	E 4TH ST	South	Single Post	2x2	Concrete	Right	Steel	8/19/2014	Acceptable	43.871935	-116.487745
1037	581	D3	S	Aluminum	Engineer Grade	Clear	Good	583	E 4TH ST	6	32	10		0	0	6	TSJ	S MOFFAT AVE	E 4TH ST	South	Single Post	2x2	Concrete	Right	Steel	8/19/2014	Acceptable	43.871935	-116.487745
1038	581	R1-1	S	Aluminum	Engineer Grade	Clear	Good	583	STOP	30	30	10		0	10	6	TSJ	S MOFFAT AVE	E 4TH ST	South	Single Post	2x2	Concrete	Right	Steel	8/19/2014	Acceptable	43.871935	-116.487745
1039	582	D3	S	Aluminum	Engineer Grade	Clear	Good	584	E 4TH ST	6	32	9		0	0	6	TSJ	S DECLARK AVE	E 4TH ST	South	Single Post	2x2	Soil	Right	Steel	8/19/2014	Acceptable	43.871918	-116.489031
1040	582	D3	S	Aluminum	Engineer Grade	Clear	Good	584	S DECLARK AVE	6	36	9		0	0	6	TSJ	S DECLARK AVE	E 4TH ST	South	Single Post	2x2	Soil	Right	Steel	8/19/2014	Acceptable	43.871918	-116.489031
1041	582	R1-1	S	Aluminum	Engineer Grade	Clear	Good	584	STOP	30	30	9		0	10	6	TSJ	S DECLARK AVE	E 4TH ST	South	Single Post	2x2	Soil	Right	Steel	8/19/2014	Acceptable	43.871918	-116.489031
1042	583	D3	S	Aluminum	Engineer Grade	Clear	Good	585	E 4TH ST	6	32	11		0	0	7	TSJ	S DECLARK AVE	E 4TH ST	North	Single Post	2x2	Soil	Right	Steel	8/19/2014	Acceptable	43.871751	-116.489364
1043	583	D3	S	Aluminum	Engineer Grade	Clear	Good	585	S DECLARK AVE	6	36	11		0	0	7	TSJ	S DECLARK AVE	E 4TH ST	North	Single Post	2x2	Soil	Right	Steel	8/19/2014	Acceptable	43.871751	-116.489364
1044	583	R1-1	S	Aluminum	Engineer Grade	Clear	Good	585	STOP	30	30	11		0	10	7	TSJ	S DECLARK AVE	E 4TH ST	North	Single Post	2x2	Soil	Right	Steel	8/19/2014	Acceptable	43.871751	-116.489364
1045	584	D3	S	Aluminum	Engineer Grade	Clear	Good	586	HAZEL AVE	6	32	11		0	0	8	TSJ	HAZEL AVE	E 4TH ST	South	Single Post	2x2	Soil	Right	Steel	8/19/2014	Acceptable	43.871912	-116.490713
1046	584	D3	S	Aluminum	Engineer Grade	Clear	Good	586	E 4TH ST	6	32	11		0	0	8	TSJ	HAZEL AVE	E 4TH ST	South	Single Post	2x2	Soil	Right	Steel	8/19/2014	Acceptable	43.871912	-116.490713
1047	584	R1-1	E	Aluminum	Engineer Grade	Clear	Good	586	STOP	30	30	11		0	10	8	TSJ	HAZEL AVE	E 4TH ST	South	Single Post	2x2	Soil	Right	Steel	8/19/2014	Acceptable	43.871912	-116.490713
1048	585	D3	S	Aluminum	Engineer Grade	Tree Obscured	Good	587	HAZEL AVE	6	32	9		0	0	8	TSJ	HAZEL AVE	E 4TH ST	North	Single Post	2x2	Soil	Right	Steel	8/19/2014	Acceptable	43.871713	-116.490553
1049	585	D3	E	Aluminum	Engineer Grade	Tree Obscured	Good	587	E 4TH ST	6	32	9		0	0	8	TSJ	HAZEL AVE	E 4TH ST	North	Single Post	2x2	Soil	Right	Steel	8/19/2014	Acceptable	43.871713	-116.490553
1050	585	R1-1	S	Aluminum	Engineer Grade	Partially Obscured	Good	587	STOP	30	30	9		0	10	8	TSJ	HAZEL AVE	E 4TH ST	North	Single Post	2x2	Soil	Right	Steel	8/19/2014	Acceptable	43.871713	-116.490553
1051	586	R2-1-20	W	Aluminum	Engineer Grade	Clear	Fair	588	SPEED LIMIT	18	24	9	20	10	4	8	TSJ	E 4TH ST	HAZEL ST	East	Single Post	2x2	Concrete	Right	Steel	8/19/2014	Acceptable	43.871771	-116.491451
1052	587	S5-1	S	Aluminum	Engineer Grade	Clear	Poor	589	SCHOOL SPEED LIMIT	24	48	10	20	0	0	8	TSJ	S PINE AVE	E 4TH ST	North	Single Post	2x2	Concrete	Right	Steel	8/19/2014	Acceptable	43.871971	-116.484839
1053	588	S1-1	S	Aluminum	Engineer Grade	Clear	Good	590		35	36	5		0	0	6	TSJ	S PINE ST	E 2ND ST	South	Single Post	3in. Tube	Soil	Right	Steel	8/19/2014	Acceptable	43.873534	-116.485032
1054	589	S2-1	W	Aluminum	Engineer Grade	Clear	Good	591		35	36	8		0	0	2	TSJ	S PINE AVE	E 1ST ST	South	Single Post	2x2	Soil	Right	Steel	8/19/2014	Acceptable	43.874749	-116.48498
1055	590	S5-1	S	Aluminum	Engineer Grade	Clear	Good	592	SCHOOL SPEED LIMIT	24	48	8	20	0	0	2	TSJ	S PINE AVE	E MAIN ST	South	Single Post	2in. Channel	Soil	Right	Steel	8/19/2014	Acceptable	43.875104	-116.48506
1056	591	R7-1	S	Aluminum	Engineer Grade	Clear	Fair	593	NO PARKING ANY TIME	12	18	6		0	3	2	TSJ	E 4TH ST	S PINE ST	West	Single Post	3 3/8 x 6 I-beam	Soil	Right	Steel	8/19/2014	Acceptable	43.871898	-116.484574
1057	592	R16-X12	S	Aluminum	Engineer Grade	Clear	Good	594	STATE LAW YIELD TO PEDESTRIANS	12	36	1		0	0	0	TSJ	E 4TH ST	S PINE ST	West	Single Post	Unknown	Portable	Center	Steel	8/19/2014	Acceptable	43.871877	-116.483835
1058	593	D3	S	Aluminum	Engineer Grade	Clear	Good	595	E 4TH ST	6	32	8		0	0	3	TSJ	MONTE VISTA DR	E 4TH ST	North	Single Post	2x2	Soil	Right	Steel	8/19/2014	Acceptable	43.871779	-116.483331
1059	593	D3	E	Aluminum	Engineer Grade	Clear	Good	595	MONTE VISTA DR	6	32	8		0	0	3	TSJ	MONTE VISTA DR	E 4TH ST	North	Single Post	2x2	Soil	Right	Steel	8/19/2014	Acceptable	43.871779	-116.483331
1060	593	R1-1	S	Aluminum	Engineer Grade	Clear	Good	595	STOP	30	30	8		0	10	3	TSJ	MONTE VISTA DR	E 4TH ST	North	Single Post	2x2	Soil	Right	Steel	8/19/2014	Acceptable	43.871779	-116.483331
1061	594	R2-1-15	S	Aluminum	Engineer Grade	Clear	Good	596		18	24	6		0	0	3	TSJ	MONTE VISTA DR	E 4TH ST	South	Single Post	2x2	Concrete	Right	Steel	8/19/2014	Acceptable	43.871587	-116.483494
1062	595	R2-1-15	S	Aluminum	Engineer Grade	Clear	Fair	597		24	30	7		0	0	5	TSJ	MONTE VISTA DR	ISLAND	South	Single Post	2x2	Concrete	median	Steel	8/19/2014	Acceptable	43.869996	-116.483271
1063	596	R2-1-15	E	Aluminum	Engineer Grade	Clear	Good	598		18	24	8		0	0	5	TSJ	CASCADE ST	SHASTA DR	West	Single Post	2x2	Soil	Right	Steel	8/19/2014	Acceptable	43.868627	-116.485401
1064	597	R2-1-15	S	Aluminum	Engineer Grade	Clear	Good	599		18	24	8		0	0	5	TSJ	SHASTA	CASCADE	North	Single Post	2x2	Soil	Right	Steel	8/19/2014	Acceptable	43.869316	-116.485935
1065	598	R2-1-15	S	Aluminum	Engineer Grade	Clear	Good	600		18	24	8		0	0	5	TSJ	SHASTA DR	CASCADE	South	Single Post	2x2	Soil	Right	Steel	8/19/2014	Acceptable	43.869371	-116.486082
1066	599	R2-1-15	S	Aluminum	Engineer Grade	Clear	Good	601		18	24	10		0	0	5	TSJ	SHASTA DR	RANIER DR	East	Single Post	2x2	Soil	Right	Steel	8/19/2014	Acceptable	43.869653	-116.484528
1067	600	R2-1-15	S	Aluminum	Engineer Grade	Clear	Good	602		18	24	10		0	0	5	TSJ	SHASTA DR	RANIER DR	West	Single Post	2x2	Soil	Right	Steel	8/19/2014	Acceptable	43.869772	-116.484525
1068	601	R7-1	W	Aluminum	Engineer Grade	Clear	Good	603	NO PARKING ANY TIME	12	18	8		0	3	5	TSJ	E 4TH ST	MONTE VISTA DR	West	Single Post	2x2	Soil	Right	Steel	8/19/2014	Acceptable	43.871991	-116.483122
1069	602	S4-3	S	Aluminum	Engineer Grade	Clear	Good	604		8	24	8		0	0	5	TSJ	E 4TH ST	SCHOOL	West	Single Post	2x2	Soil	Right	Steel	8/19/2014	Acceptable	43.871925	-116.481761
1070	602	R2-1-20	S	Aluminum	Engineer Grade	Clear	Good	604	SPEED LIMIT	18	24	8	20	10	4	5	TSJ	E 4TH ST	SCHOOL	West	Single Post	2x2	Soil	Right	Steel	8/19/2014	Acceptable	43.871925	-116.481761
1071	602	S1-1	S	Aluminum	Engineer Grade	Clear	Good	604		35	36	8		0	0	5	TSJ	E 4TH ST	SCHOOL	West	Single Post	2x2	Soil	Right	Steel	8/19/2014	Acceptable	43.871925	-116.481761
1072	603	S5-2	S	Aluminum	Engineer Grade	Clear	Good	605	END SCHOOL ZONE	24	30	8		0	4	8	TSJ	E 4TH ST	SCHOOL	East	Single Post	2x2	Soil	Right	Steel	8/19/2014	Acceptable	43.871814	-116.4815
1073	604	S1-1	S	Aluminum	Engineer Grade	Clear	Good	606		35	36	8		0	0	8	TSJ	E 4TH ST	1510	East	Single Post	2x2	Soil	Right	Steel	8/19/2014	Acceptable	43.871822	-116.480986
1074	605	R2-1-35	S	Aluminum	Engineer Grade	Clear	Good	607	SPEED LIMIT	18	24	8	35	10	4	8	TSJ	E 4TH ST	1534	East	Single Post	4x4	Soil	Right	Wood	8/19/2014	Acceptable	43.87182	-116.480389
1075	606	R16-X12	S	Aluminum	Engineer Grade	Clear	Fair	608	SPEED LIMIT UNLESS OTHERWISE POSTED	30	30	8	20	0	0	8	TSJ	E 4TH ST	1534	West	Single Post	3in. Tube	Soil	Right	Steel	8/19/2014	Repair	43.871915	-116.480391
1076	607	D3	S	Aluminum	Engineer Grade	Clear	Good	609	S DECLARK AVE	6	32	8		0	0	6	TSJ	S DECLARK AVE	E 5TH ST	North	Single Post	2x2	Soil	Right	Steel	8/19/2014	Acceptable	43.870745	-116.489331
1077	607	D3	S	Aluminum	Engineer Grade	Clear	Good	609	E 5TH AVE	6	32	8		0	0	6	TSJ	S DECLARK AVE	E 5TH ST	North	Single Post	2x2	Soil	Right	Steel	8/19/2014	Acceptable	43.870745	-116.489331
1079	608	D3	S	Aluminum	Engineer Grade	Clear	Good	610	S DECLARK AVE	6	32	8		0	0	6	TSJ	HAZEL AVE	S DECLARK AVE	East	Single Post	2x2	Soil	Right	Steel	8/19/2014	Acceptable	43.869738	-116.489625
1080	608	D3	S	Aluminum	Engineer Grade	Clear	Good	610	HAZEL AVE	6	32	8		0	0	6	TSJ	HAZEL AVE	S DECLARK AVE	East	Single Post	2x2	Soil	Right	Steel	8/19/2014	Acceptable	43.869738	-116.489625

Sign ID	Support ID	MUTCD	Facing	Backing	Face Material	Visibility	Sign Condition	Photo No.	Sign Text	Length (in)	Width (in)	Height (in)	Num. Text	Num. Size (in)	Text Size (in)	Offset (ft)	Inspector	Road Name	Location Desc.	Travel Direction	Post Type	Post Size	Post Base	Post Pos.	Post Mat'l.	Date Insp.	Post Rating	Latitude	Longitude
1081	609	D3	W	Aluminum	Engineer Grade	Clear	Good	611	E 5TH ST	6	24	8		0	0	6	TSJ	E 5TH ST	HAZEL AVE	East	Single Post	2x2	Soil	Right	Steel	8/19/2014	Acceptable	43.870741	-116.490691
1082	609	D3	W	Aluminum	Engineer Grade	Clear	Good	611	HAZEL AVE	6	24	8		0	0	6	TSJ	E 5TH ST	HAZEL AVE	East	Single Post	2x2	Soil	Right	Steel	8/19/2014	Acceptable	43.870741	-116.490691
1083	610	D3	E	Aluminum	Engineer Grade	Clear	Good	612	OLD GLORY WAY	6	32	9		0	0	6	TSJ	OLD GLORY WAY	7TH	South	Single Post	2x2	Soil	Right	Steel	8/19/2014	Acceptable	43.868805	-116.491119
1084	610	R1-1	S	Aluminum	Engineer Grade	Clear	Fair	612	STOP	30	30	9		0	10	6	TSJ	OLD GLORY WAY	7TH	South	Single Post	2x2	Soil	Right	Steel	8/19/2014	Acceptable	43.868805	-116.491119
1085	611	W1-1R	S	Aluminum	Engineer Grade	Clear	Poor	613		30	30	8		0	0	4	TSJ	E 7TH ST	787	East	Single Post	4x4	Soil	Right	Wood	8/19/2014	Acceptable	43.868702	-116.488732
1086	611	W13-1	E	Aluminum	Engineer Grade	Clear	Poor	613		24	24	8	10	0	0	4	TSJ	E 7TH ST	787	East	Single Post	4x4	Soil	Right	Wood	8/19/2014	Acceptable	43.868702	-116.488732
1087	612	D3	S	Aluminum	Engineer Grade	Clear	Good	614	LYNN DR	6	32	10		0	0	3	TSJ	LYNN DR	E 7TH ST	North	Single Post	2x2	Soil	Right	Steel	8/19/2014	Acceptable	43.868693	-116.491422
1088	612	D3	S	Aluminum	Engineer Grade	Clear	Good	614	E 7TH ST	6	32	10		0	0	3	TSJ	LYNN DR	E 7TH ST	North	Single Post	2x2	Soil	Right	Steel	8/19/2014	Acceptable	43.868693	-116.491422
1089	612	R1-1	S	Aluminum	Engineer Grade	Clear	Good	614	STOP	30	30	10		0	10	3	TSJ	LYNN DR	E 7TH ST	North	Single Post	2x2	Soil	Right	Steel	8/19/2014	Acceptable	43.868693	-116.491422
1090	613	D3	E	Aluminum	Engineer Grade	Clear	Good	615	VISTA DR	6	32	8		0	0	5	TSJ	VISTA DR	S PINE AVE	West	Single Post	2x2	Soil	Right	Steel	8/20/2014	Acceptable	43.874238	-116.484832
1091	613	D3	E	Aluminum	Engineer Grade	Clear	Good	615	S PINE AVE	6	32	8		0	0	5	TSJ	VISTA DR	S PINE AVE	West	Single Post	2x2	Soil	Right	Steel	8/20/2014	Acceptable	43.874238	-116.484832
1092	613	R1-1	E	Aluminum	Engineer Grade	Clear	Good	615	STOP	30	30	8		0	10	5	TSJ	VISTA DR	S PINE AVE	West	Single Post	2x2	Soil	Right	Steel	8/20/2014	Acceptable	43.874238	-116.484832
1093	614	D3	E	Aluminum	Engineer Grade	Clear	Good	616	SUNNY LANE	6	24	11		0	0	10	TSJ	VISTA DR	SUNNY LANE	East	Single Post	3in. Tube	Soil	Right	Steel	8/20/2014	Acceptable	43.874824	-116.482176
1094	614	D3	E	Aluminum	Engineer Grade	Clear	Good	616	VISTA DRIVE	6	24	11		0	0	10	TSJ	VISTA DR	SUNNY LANE	East	Single Post	3in. Tube	Soil	Right	Steel	8/20/2014	Acceptable	43.874824	-116.482176
1095	615	R1-1	E	Aluminum	Engineer Grade	Clear	Good	617	STOP	30	30	8		0	10	3	TSJ	SUNNY LANE	E MAIN ST	North	Single Post	2x2	Soil	Right	Steel	8/20/2014	Acceptable	43.875575	-116.481976
1096	615	D3	E	Aluminum	Engineer Grade	Clear	Good	617	E MAIN ST	6	32	8		0	0	3	TSJ	SUNNY LANE	E MAIN ST	North	Single Post	2x2	Soil	Right	Steel	8/20/2014	Acceptable	43.875575	-116.481976
1097	615	D3	E	Aluminum	Engineer Grade	Clear	Good	617	SUNNY LANE	6	32	8		0	0	3	TSJ	SUNNY LANE	E MAIN ST	North	Single Post	2x2	Soil	Right	Steel	8/20/2014	Acceptable	43.875575	-116.481976
1098	616	D3	E	Aluminum	Engineer Grade	Clear	Good	618	ERICKSON AVE	6	32	8		0	0	3	TSJ	ERICKSON AVE	E MAIN ST	North	Single Post	2x2	Soil	Right	Steel	8/20/2014	Acceptable	43.875548	-116.480842
1099	616	D3	E	Aluminum	Engineer Grade	Clear	Good	618	E MAIN ST	6	32	8		0	0	3	TSJ	ERICKSON AVE	E MAIN ST	North	Single Post	2x2	Soil	Right	Steel	8/20/2014	Acceptable	43.875548	-116.480842
1100	616	R1-1	E	Aluminum	Engineer Grade	Clear	Fair	618	STOP	30	30	8		0	10	3	TSJ	ERICKSON AVE	E MAIN ST	North	Single Post	2x2	Soil	Right	Steel	8/20/2014	Acceptable	43.875548	-116.480842
1101	617	R2-1-20	E	Aluminum	Engineer Grade	Clear	Poor	618	SPEED LIMIT	24	30	6	20	10	4	6	TSJ	ERICKSON AVE	E MAIN ST	South	Single Post	2x2	Soil	Right	Steel	8/20/2014	Acceptable	43.875319	-116.481038
1102	618	R16-X12	E	Aluminum	Engineer Grade	Clear	Good	620	EMMETT CITY LIMITS	30	30	11		0	0	10	TSJ	E MAIN ST	1640	West	Single Post	2x2	Soil	Right	Steel	8/20/2014	Acceptable	43.875704	-116.478692
1103	618	R16-X12	E	Aluminum	Engineer Grade	Clear	Good	620	SPEED LIMIT UNLESS OTHERWISE POSTED	30	30	10	20	0	0	10	TSJ	E MAIN ST	1640	West	Single Post	2x2	Soil	Right	Steel	8/20/2014	Acceptable	43.875704	-116.478692
1104	619	R2-1-35	E	Aluminum	Engineer Grade	Clear	Good	621	SPEED LIMIT	18	24	8	35	10	4	5	TSJ	E MAIN ST	1640	East	Single Post	4x4	Soil	Right	Wood	8/20/2014	Acceptable	43.875608	-116.478836
1105	620	R2-1-30	E	Aluminum	Engineer Grade	Clear	Good	622		24	30	10		0	0	5	TSJ	E MAIN ST	1501	West	Single Post	2x2	Soil	Right	Steel	8/20/2014	Acceptable	43.875717	-116.479447
1106	621	S2-1	E	Aluminum	Engineer Grade	Clear	Fair	623		35	36	7		0	0	5	TSJ	E MAIN ST	ERICKSON AVE	West	Single Post	2x2	Soil	Right	Steel	8/20/2014	Acceptable	43.875719	-116.480085
1107	622	D3	N	Aluminum	Engineer Grade	Tree Obscured	Good	624	RIGGS ST	6	30	10		0	0	5	TSJ	RIGGS ST	E MAIN ST	South	Single Post	2x2	Soil	Right	Steel	8/20/2014	Acceptable	43.875738	-116.481542
1108	622	D3	N	Aluminum	Engineer Grade	Tree Obscured	Good	624	E MAIN ST	6	30	10		0	0	5	TSJ	RIGGS ST	E MAIN ST	South	Single Post	2x2	Soil	Right	Steel	8/20/2014	Acceptable	43.875738	-116.481542
1109	622	R1-1	N	Aluminum	Engineer Grade	Tree Obscured	Good	624	STOP	30	30	8		0	10	5	TSJ	RIGGS ST	E MAIN ST	South	Single Post	2x2	Soil	Right	Steel	8/20/2014	Acceptable	43.875738	-116.481542
1110	623	S2-1	N	Aluminum	Engineer Grade	Clear	Fair	625		35	36	6		0	0	5	TSJ	E MAIN ST	1219	West	Single Post	3in. Tube	Soil	Right	Steel	8/20/2014	Acceptable	43.875723	-116.483882
1111	624	D9-A	N	Aluminum	Engineer Grade	Clear	Fair	626		6	24	8		0	0	6	TSJ	E MAIN ST	S PINE AVE	West	Single Post	Telephone Pole	Soil	Right	Wood	8/20/2014	Acceptable	43.875728	-116.484869
1112	624	D9-2	N	Aluminum	Engineer Grade	Clear	Fair	626	H	24	24	8		0	18	6	TSJ	E MAIN ST	S PINE AVE	West	Single Post	Telephone Pole	Soil	Right	Wood	8/20/2014	Acceptable	43.875728	-116.484869
1113	624	D9-13AP	N	Aluminum	Engineer Grade	Clear	Fair	626	HOSPITAL	6	24	8		0	4	6	TSJ	E MAIN ST	S PINE AVE	West	Single Post	Telephone Pole	Soil	Right	Wood	8/20/2014	Acceptable	43.875728	-116.484869
1114	625	D3	S	Aluminum	Engineer Grade	Clear	Fair	627	E MAIN ST	6	32	10		0	0	5	TSJ	N PINE AVE	E MAIN ST	South	Single Post	2x2	Soil	Right	Steel	8/20/2014	Acceptable	43.875739	-116.485366
1115	625	D3	N	Aluminum	Engineer Grade	Clear	Good	627	N PINE AVE	6	32	8		0	0	5	TSJ	N PINE AVE	E MAIN ST	South	Single Post	2x2	Soil	Right	Steel	8/20/2014	Acceptable	43.875739	-116.485366
1116	625	R1-1	S	Aluminum	Engineer Grade	Clear	Poor	627	STOP	30	30	8		0	10	5	TSJ	N PINE AVE	E MAIN ST	South	Single Post	2x2	Soil	Right	Steel	8/20/2014	Acceptable	43.875739	-116.485366
1117	626	S2-1	N	Aluminum	Engineer Grade	Clear	Fair	628		35	36	6		0	0	5	TSJ	E MAIN ST	N PINE AVE	East	Single Post	3in. Tube	Soil	Right	Steel	8/20/2014	Acceptable	43.875568	-116.485448
1118	627	D3	S	Aluminum	Engineer Grade	Clear	Good	629	E MAIN ST	6	32	8		0	0	5	TSJ	S BUTTE AVE	E MAIN ST	North	Single Post	2x2	Soil	Right	Steel	8/20/2014	Acceptable	43.875562	-116.486228
1119	627	D3	S	Aluminum	Engineer Grade	Clear	Good	629	S BUTTE AVE	6	32	8		0	0	5	TSJ	S BUTTE AVE	E MAIN ST	North	Single Post	2x2	Soil	Right	Steel	8/20/2014	Acceptable	43.875562	-116.486228
1120	627	R1-1	S	Aluminum	Engineer Grade	Clear	Good	629	STOP	30	30	8		0	10	5	TSJ	S BUTTE AVE	E MAIN ST	North	Single Post	2x2	Soil	Right	Steel	8/20/2014	Acceptable	43.875562	-116.486228
1121	628	D9-2	S	Aluminum	Engineer Grade	Clear	Fair	630	H	24	24	8		0	18	1	TSJ	E MAIN ST	S BUTTE AVE	East	Single Post	3in. Tube	Concrete	Right	Steel	8/20/2014	Acceptable	43.875586	-116.486465
1122	628	D9-A	S	Aluminum	Engineer Grade	Clear	Fair	630		6	24	8		0	0	1	TSJ	E MAIN ST	S BUTTE AVE	East	Single Post	3in. Tube	Concrete	Right	Steel	8/20/2014	Acceptable	43.875586	-116.486465
1123	628	D9-13AP	S	Aluminum	Engineer Grade	Clear	Fair	630	HOSPITAL	6	24	8		0	0	1	TSJ	E MAIN ST	S BUTTE AVE	East	Single Post	3in. Tube	Concrete	Right	Steel	8/20/2014	Acceptable	43.875586	-116.486465
1124	629	S2-1	S	Aluminum	Engineer Grade	Clear	Good	631		35	36	8		0	0	1	TSJ	E MAIN ST	S BUTTE AVE	East	Single Post	2in. Channel	Concrete	Right	Steel	8/20/2014	Acceptable	43.875585	-116.48665
1125	630	D3	S	Aluminum	Engineer Grade	Clear	Good	632	E MAIN ST	6	32	8		0	0	1	TSJ	N MOFFATT AVE	E MAIN ST	South	Single Post	2x2	Soil	Right	Steel	8/20/2014	Acceptable	43.875736	-116.487797
1126	630	D3	S	Aluminum	Engineer Grade	Clear	Good	632	N MOFFATT AVE	6	36	8		0	0	1	TSJ	N MOFFATT AVE	E MAIN ST	South	Single Post	2x2	Soil	Right	Steel	8/20/2014	Acceptable	43.875736	-116.487797
1127	630	R1-1	S	Aluminum	Engineer Grade	Clear	Good	632	STOP	30	30	8		0	10	1	TSJ	N MOFFATT AVE	E MAIN ST	South	Single Post	2x2	Soil	Right	Steel	8/20/2014	Acceptable	43.875736	-116.487797
1128	631	D3	S	Aluminum	Engineer Grade	Clear	Good	633	E MAIN ST	6	32	8		0	0	5	TSJ	S MOFFATT AVE	E MAIN ST	North	Single Post	2x2	Soil	Right	Steel	8/20/2014	Acceptable	43.87556	-116.487604
1129	631	D3	S	Aluminum	Engineer Grade	Clear	Good	633	S MOFFATT AVE	6	36	8		0	0	5	TSJ	S MOFFATT AVE	E MAIN ST	North	Single Post	2x2	Soil	Right	Steel	8/20/2014	Acceptable	43.87556	-116.487604
1130	631	R1-1	S	Aluminum	Engineer Grade	Clear	Good	633	STOP	30	30	8		0	10	5	TSJ	S MOFFATT AVE	E MAIN ST	North	Single Post	2x2	Soil	Right	Steel	8/20/2014	Acceptable	43.87556	-116.487604
1131	632	D3	S	Aluminum	Engineer Grade	Clear	Good	634	N DECLARK AVE	6	36	11		0	0	3	TSJ	N DECLARK AVE	E MAIN ST	South	Single Post	2x2	Soil	Right	Steel	8/20/2014	Acceptable	43.875734	-116.489103
1132	632	D3	S	Aluminum	Engineer Grade	Clear	Good	634	E MAIN ST	6	32	11		0	0	3	TSJ	N DECLARK AVE	E MAIN ST	South	Single Post	2x2	Soil	Right	Steel	8/20/2014	Acceptable	43.875734	-116.489103
1133	632	R1-1	S	Aluminum	Engineer Grade	Clear	Fair	634	STOP	30	30	11		0	10	3	TSJ	N DECLARK AVE	E MAIN ST	South	Single Post	2x2	Soil	Right	Steel	8/20/2014	Acceptable	43.875734	-116.489103
1134	633	R2-1-20	S	Aluminum	Engineer Grade	Clear	Fair	635	SPEED LIMIT	18	24	8	20	10	4	3	TSJ	E MAIN ST	N DECLARK AVE	West	Single Post	2x2	Soil	Right	Steel	8/20/2014	Acceptable	43.875703	-116.489181
1135	634	D3	S	Aluminum	Engineer Grade	Clear	Good	636	E MAIN ST	6	32	11		0	0	3	TSJ	S DECLARK AVE	E MAIN ST	North	Single Post	2x2	Soil	Right	Steel	8/20/2014	Acceptable	43.875544	-116.488999
1136	634	D3	S	Aluminum	Engineer Grade	Clear	Good	636	S DECLARK AVE	6	36	8		0	0	3	TSJ	S DECLARK AVE	E MAIN ST	North	Single Post	2x2	Soil	Right	Steel	8/20/2014	Acceptable	43.875544	-116.488999
1137	634	R1-1	S	Aluminum	Engineer Grade	Clear	Good	636	STOP	30	30	8		0	10	3	TSJ	S DECLARK AVE	E MAIN ST	North	Single Post	2x2	Soil	Right	Steel	8/20/2014	Acceptable	43.875544	-116.488999
1138	635	R7-13	S	Aluminum	Engineer Grade	Clear	Fair	637	NO PARKING THIS SIDE OF STREET	18	24	5		0	4	5	TSJ	E MAIN ST	EVERGREEN DR	West	Single Post	3in. Tube	Soil	Right	Steel	8/20/2014	Acceptable	43.875692	-116.489522
1139	636	D3	S	Aluminum	Engineer Grade	Clear	Good	638	EVERGREEN DR	6	32	9		0	0	5	TSJ	EVERGREEN DR	E MAIN ST	South	Single Post	2x2	Concrete	Right	Steel	8/20/2014	Acceptable	43.875698	-116.48964
1140	636	D3	S	Aluminum	Engineer Grade	Clear	Good	638	E MAIN ST	6	32	9		0	0	5	TSJ	EVERGREEN DR	E MAIN ST	South	Single Post	2x2	Concrete	Right	Steel	8/20/2014	Acceptable	43.875698	-116.48964
1141	637	R7-1	S	Aluminum	Engineer Grade	Clear	Fair	639	NO PARKING ANY TIME	12	18	5		0	3	3	TSJ	E MAIN ST	EVERGREEN DR	East	Single Post	3in. Tube	Soil	Right	Steel	8/20/2014	Acceptable	43.875589	-116.489328
1142	638	R2-1-30	S	Aluminum	Engineer Grade	Clear	Good	640		18	24	6		0	0	3	TSJ	E MAIN ST	N DECLARK AVE	East	Single Post	2x2	Soil	Right	Steel	8/20/2014	Acceptable	43.875591	-116.489204
1143	639	S2-1	S	Aluminum	Engineer Grade	Clear	Good	641		35	36	7		0	0	3	TSJ	E MAIN ST	EVERGREEN DR	East	Single Post	2x2	Soil	Right	Steel	8/20/2014	Acceptable	43.875575	-116.489978
1144	640	R7-13	S	Aluminum	Engineer Grade	Clear	Good	642	NO PARKING THIS SIDE OF STREET	18	24	7		0	4	4	TSJ	E MAIN ST	EVERGREEN DR	West	Single Post	3in. Tube	Concrete	Right	Steel	8/20/2014	Acceptable	43.8757	-116.490341
1145	641	R7-1	S	Aluminum	Engineer Grade	Clear	Fair	643	NO PARKING ANY TIME	12	18	4		0	3	4	TSJ	E MAIN ST	EVERGREEN DR	East	Single Post	2x2	Soil	Right	Steel	8/20/2014	Acceptable	43.875599	-116.490371
1146	642	R7-1	S	Aluminum	Engineer Grade	Clear	Good	644	NO PARKING ANY TIME	24	30	5		0	3	4	TSJ	E MAIN ST	629	East	Single Post	3in. Tube	Soil	Right	Steel	8/20/2014	Acceptable	43.875595	-116.49139
1147	643	R7-1	E	Aluminum	Engineer Grade	Clear	Good	645	NO PARKING ANY TIME	12	18	5		0	3	4	TSJ	E MAIN ST	S JOHN'S AVE	East	Single Post	2x2	Soil	Right	Steel	8/20/2014	Acceptable	43.875603	-116.492074
1148	644	R7-13	E	Aluminum	Engineer Grade	Clear	Poor	645	NO PARKING THIS SIDE OF STREET	18	24	4		0	4	5	TSJ	E MAIN ST	S JOHN'S AVE	West	Single Post	3in. Tube	Soil	Right	Steel	8/20/2014	Acceptable	43.875697	-116.492367
1149	645	R7-1	E	Aluminum	Engineer Grade	Clear	Replace	647	NO PARKING ANY TIME	12	18	4		0	3	4	TSJ	E MAIN ST	S JOHN'S AVE	East	Single Post	3in. Tube	Soil	Right	Steel	8/20/2014	Acceptable	43.875591	-116.492496
1150	646	D3	N	Aluminum	Engineer Grade	Clear	Good	648	FERNLEE CIR	6	30	7		0	0	7	TSJ	FERLEE CIRCLE	RIGGS ST	West	Single Post	3in. Tube	Soil	Right	Steel	8/20/2014	Acceptable	43.881691	-116.481462
1151	647	D3	N	Aluminum	Engineer Grade	Clear	Good	647	FERNLEE ST	6	32	8		0	0	5	TSJ	FERNLEE ST	RIGGS ST	East	Single Post	2x2	Soil	Right	Steel	8/20/2014	Acceptable	43.881701	-116.481665
1152	648	D3	N	Aluminum	Engineer Grade	Clear	Good	650	BUTTE SHADOW ST	6	30	7		0	0	7	TSJ	BUTTE SHADOW ST	RIGGS	West	Single Post	2x2	Soil	Right	Steel	8/20/2014	Acceptable	43.880997	-116.481446
1153	649	D3	N	Aluminum	Engineer Grade	Clear	Good	651	LORAINE CIR	6	30	7		0	0	7	TSJ	LORAINE CIRCLE	RIGGS	East	Single Post	2x2	Soil	Left	Steel	8/20/2014	Acceptable	43.880988	-116.481655
1154	650	D3	N	Aluminum	Engineer Grade	Clear	Good	652	SHADOW RIDGE CIR	6	30	7		0	0	10	TSJ	SHADOW RIDGE CIRCLE	RIGGS	East	Single Post	3 3/8 x 10 I-beam	Soil	Right	Steel	8/20/2014	Acceptable	43.880077	-116.481453
1155	651	D3	N	Aluminum	Engineer Grade	Clear	Fair	653	BUTTE VIEW CIR	6	30	8		0	0	7	TSJ	BUTTE VIEW CIR	RIGGS	East	Single Post	2x2	Soil	Left	Steel	8/20/2014	Acceptable	43.880066	-116.481667
1156	652	D3	N	Aluminum	Engineer Grade	Clear	Good	654	RIGGS ST	6	24	10		0	0	8	TSJ	RIGGS ST	E LOCUST ST	South	Single Post	3in. Tube	Soil	Right	Steel	8/20/2014	Acceptable	43.879193	-116.48165
1157	652	D3	N	Aluminum	Engineer Grade	Clear	Good	654	E LOCUST ST	6	30	10		0	0	8	TSJ	RIGGS ST	E LOCUST ST	South	Single Post	3in. Tube	Soil	Right	Steel	8/20/2014	Acceptable	43.879193	-116.48165
1158	652	R1-1	N	Aluminum	Engineer Grade	Clear	Good	654	STOP	30	30	8		0	10	8	TSJ	RIGGS ST	E LOCUST ST	South	Single Post	3in. Tube	Soil	Right	Steel	8/20/2014	Acceptable	43.879193	-116.48165
1159	653	OM-3R	E	Aluminum	Engineer Grade	Clear	Fair	655		12	36	1		0	0	5	TSJ	E LOCUST	1601	East	Single Post	2x2	Soil	Left	Steel	8/20/2014	Acceptable	43.879155	-116.479114

Sign ID	Support ID	MUTCD	Facing	Backing	Face Material	Visibility	Sign Condition	Photo No.	Sign Text	Length (in)	Width (in)	Height (in)	Num. Text	Num. Size (in)	Text Size (in)	Offset (ft)	Inspector	Road Name	Location Desc.	Travel Direction	Post Type	Post Size	Post Base	Post Pos.	Post Mat'l.	Date Insp.	Post Rating	Latitude	Longitude
1160	654	R16-X12	E	Aluminum	Engineer Grade	Clear	Good	656	EMMETT CITY LIMITS	24	24	11		0	0	5	TSJ	E LOCUST ST	1601	West	Single Post	2x2	Soil	Right	Steel	8/20/2014	Acceptable	43.879185	-116.479181
1161	654	R16-X12	E	Aluminum	Engineer Grade	Clear	Good	656	SPEED LIMIT UNLESS OTHERWISE POSTED	24	24	8	20	0	0	5	TSJ	E LOCUST ST	1601	West	Single Post	2x2	Soil	Right	Steel	8/20/2014	Acceptable	43.879185	-116.479181
1162	655	R2-1-35	E	Aluminum	Engineer Grade	Clear	Good	657	SPEED LIMIT	18	24	10	35	10	4	5	TSJ	E LOCUST ST	1601	East	Single Post	4x4	Soil	Right	Wood	8/20/2014	Replace	43.879035	-116.479173
1163	656	R2-1-30	E	Aluminum	Engineer Grade	Clear	Good	658		24	30	11		0	0	8	TSJ	E LOCUST ST	1500	East	Single Post	2x2	Soil	Right	Steel	8/20/2014	Acceptable	43.879171	-116.480297
1164	657	W42-8	S	Aluminum	Engineer Grade	Clear	Good	659	NOT A THROUGH STREET	30	30	6		0	0	8	TSJ	E LOCUST ST	RIGGS ST	East	Single Post	3in. Tube	Soil	Left	Steel	8/20/2014	Acceptable	43.879185	-116.481666
1165	658	D3	S	Aluminum	Engineer Grade	Clear	Good	660	RIGGS ST	6	30	10		0	0	8	TSJ	E LOCUST ST	RIGGS ST	North	Single Post	3in. Tube	Soil	Right	Steel	8/20/2014	Acceptable	43.878839	-116.481828
1166	658	D3	S	Aluminum	Engineer Grade	Clear	Good	660	E LOCUST ST	6	30	10		0	0	8	TSJ	E LOCUST ST	RIGGS ST	North	Single Post	3in. Tube	Soil	Right	Steel	8/20/2014	Acceptable	43.878839	-116.481828
1167	658	R1-1	S	Aluminum	Engineer Grade	Clear	Good	660	STOP	30	30	8		0	10	8	TSJ	E LOCUST ST	RIGGS ST	North	Single Post	3in. Tube	Soil	Right	Steel	8/20/2014	Acceptable	43.878839	-116.481828
1168	659	D3	S	Aluminum	Engineer Grade	Clear	Fair	661	OLD MAPLE DRIVE	6	30	8		0	0	8	TSJ	OLD MAPLE DRIVE	RIGGS STREET	West	Single Post	2x2	Soil	Right	Steel	8/20/2014	Acceptable	43.878633	-116.481959
1169	659	D3	S	Aluminum	Engineer Grade	Clear	Fair	661	RIGGS STREET	6	30	8		0	0	8	TSJ	OLD MAPLE DRIVE	RIGGS STREET	West	Single Post	2x2	Soil	Right	Steel	8/20/2014	Acceptable	43.878633	-116.481959
1170	659	R6-2R	N	Aluminum	Engineer Grade	Clear	Good	661	ONE WAY TRAFFIC ONLY	12	18	88		0	0	5	TSJ	OLD MAPLE DRIVE	RIGGS STREET	West	Single Post	2x2	Soil	Right	Steel	8/20/2014	Acceptable	43.878633	-116.481959
1171	660	R6-2R	N	Aluminum	Engineer Grade	Clear	Good	662	LEFT ARROW	18	224	6		0	0	8	TSJ	OLD MAPLE DRIVE	RIGGS ST	West	Single Post	2x2	Soil	Right	Steel	8/20/2014	Acceptable	43.878499	-116.481946
1172	660	R7-13	N	Aluminum	Engineer Grade	Clear	Good	662	NO PARKING THIS SIDE OF STREET	12	18	6		0	4	8	TSJ	OLD MAPLE DRIVE	RIGGS ST	West	Single Post	2x2	Soil	Right	Steel	8/20/2014	Acceptable	43.878499	-116.481946
1173	661	R7-13	E	Aluminum	Engineer Grade	Clear	Good	663	NO PARKING THIS SIDE OF STREET	18	24	8		0	4	8	TSJ	OLD MAPLE DRIVE	CIRCLE	West	Single Post	2x2	Soil	Right	Steel	8/20/2014	Acceptable	43.878416	-116.481243
1174	662	D3	E	Aluminum	Engineer Grade	Clear	Good	664	RIGGS STREET	6	30	11		0	4	8	TSJ	OLD MAPLE DRIVE	RIGGS ST	West	Single Post	2x2	Soil	Right	Steel	8/20/2014	Acceptable	43.87834	-116.481927
1175	662	D3	E	Aluminum	Engineer Grade	Clear	Good	664	OLD MAPLE DRIVE	6	30	11		0	0	8	TSJ	OLD MAPLE DRIVE	RIGGS ST	West	Single Post	2x2	Soil	Right	Steel	8/20/2014	Acceptable	43.87834	-116.481927
1176	662	R1-1	E	Aluminum	Engineer Grade	Clear	Good	664	STOP	30	30	11		0	10	8	TSJ	OLD MAPLE DRIVE	RIGGS ST	West	Single Post	2x2	Soil	Right	Steel	8/20/2014	Acceptable	43.87834	-116.481927
1177	662	R7-13	S	Aluminum	Engineer Grade	Clear	Fair	664	NO PARKING THIS SIDE OF STREET	18	24	7		0	4	8	TSJ	OLD MAPLE DRIVE	RIGGS ST	West	Single Post	2x2	Soil	Right	Steel	8/20/2014	Acceptable	43.87834	-116.481927
1178	662	M6-1	S	Aluminum	Engineer Grade	Clear	Good	664	LEFT ARROW	12	18	6		0	0	8	TSJ	OLD MAPLE DRIVE	RIGGS ST	West	Single Post	2x2	Soil	Right	Steel	8/20/2014	Acceptable	43.87834	-116.481927
1179	663	R5-1	N	Aluminum	Engineer Grade	Clear	Good	665	DO NOT ENTER	12	18	7		0	0	8	TSJ	OLD MAPLE DRIVE	RIGGS ST	East	Single Post	2x2	Soil	Right	Steel	8/20/2014	Acceptable	43.878222	-116.481929
1180	664	D3	W	Aluminum	Engineer Grade	Clear	Good	666	RIGGS ST	6	24	8		0	4	8	TSJ	RIGGS ST	BLANE ST	South	Single Post	2x2	Soil	Right	Steel	8/20/2014	Acceptable	43.878086	-116.482196
1181	664	D3	N	Aluminum	Engineer Grade	Clear	Good	666	BLANE ST	6	24	8		0	0	8	TSJ	RIGGS ST	BLANE ST	South	Single Post	2x2	Soil	Right	Steel	8/20/2014	Acceptable	43.878086	-116.482196
1182	665	D3	N	Aluminum	Engineer Grade	Clear	Good	667	BASQUE LN	6	30	12		0	0	8	TSJ	BASQUE LN	RIGGS ST	West	Single Post	2x2	Soil	Left	Steel	8/20/2014	Acceptable	43.877592	-116.481312
1183	665	D3	N	Aluminum	Engineer Grade	Clear	Good	667	RIGGS ST	6	30	12		0	0	8	TSJ	BASQUE LN	RIGGS ST	West	Single Post	2x2	Soil	Left	Steel	8/20/2014	Acceptable	43.877592	-116.481312
1184	666	D3	N	Aluminum	Engineer Grade	Clear	Good	668	E PARK ST	6	18	12		0	0	8	TSJ	RIGGS ST	E PARK ST	South	Single Post	2x2	Soil	Right	Steel	8/20/2014	Acceptable	43.877352	-116.481567
1185	666	D3	N	Aluminum	Engineer Grade	Clear	Good	668	RIGGS ST	6	18	12		0	0	8	TSJ	RIGGS ST	E PARK ST	South	Single Post	2x2	Soil	Right	Steel	8/20/2014	Acceptable	43.877352	-116.481567
1186	667	D3	N	Aluminum	Engineer Grade	Clear	Good	669	PINE AVE	6	30	10		0	0	8	TSJ	PINE AVE	E LOCUST ST	North	Single Post	2x2	Soil	Right	Steel	8/20/2014	Acceptable	43.87897	-116.485186
1187	667	D3	N	Aluminum	Engineer Grade	Clear	Good	669	E LOCUST ST	6	30	10		0	0	8	TSJ	PINE AVE	E LOCUST ST	North	Single Post	2x2	Soil	Right	Steel	8/20/2014	Acceptable	43.87897	-116.485186
1188	667	R1-1	N	Aluminum	Engineer Grade	Clear	Good	669	STOP	30	30	8		0	10	8	TSJ	PINE AVE	E LOCUST ST	North	Single Post	2x2	Soil	Right	Steel	8/20/2014	Acceptable	43.87897	-116.485186
1189	668	D3	N	Aluminum	Engineer Grade	Clear	Good	670	N BUTTE AVE	6	30	10		0	0	3	TSJ	N BUTTE AVE	E LOCUST ST	South	Single Post	2x2	Soil	Right	Steel	8/20/2014	Acceptable	43.879179	-116.486339
1190	668	D3	N	Aluminum	Engineer Grade	Clear	Good	670	E LOCUST ST	6	30	10		0	0	3	TSJ	N BUTTE AVE	E LOCUST ST	South	Single Post	2x2	Soil	Right	Steel	8/20/2014	Acceptable	43.879179	-116.486339
1191	668	R1-1	N	Aluminum	Engineer Grade	Clear	Good	670	STOP	30	30	9		0	10	3	TSJ	N BUTTE AVE	E LOCUST ST	South	Single Post	2x2	Soil	Right	Steel	8/20/2014	Acceptable	43.879179	-116.486339
1192	669	D3	N	Aluminum	Engineer Grade	Clear	Good	671	N MOFFATT AVE	6	30	11		0	0	5	TSJ	N MOFFATT AVE	E LOCUST ST	South	Single Post	2x2	Soil	Right	Steel	8/20/2014	Acceptable	43.879176	-116.487826
1193	669	D3	N	Aluminum	Engineer Grade	Clear	Good	671	E LOCUST ST	6	30	11		0	0	5	TSJ	N MOFFATT AVE	E LOCUST ST	South	Single Post	2x2	Soil	Right	Steel	8/20/2014	Acceptable	43.879176	-116.487826
1194	669	R1-1	N	Aluminum	Engineer Grade	Clear	Good	671	STOP	30	30	11		0	10	5	TSJ	N MOFFATT AVE	E LOCUST ST	South	Single Post	2x2	Soil	Right	Steel	8/20/2014	Acceptable	43.879176	-116.487826
1195	670	D3	N	Aluminum	Engineer Grade	Clear	Good	672	E LOCUST ST	6	30	11		0	0	3	TSJ	N DECLARK AVE	E LOCUST ST	North	Single Post	2x2	Soil	Right	Steel	8/20/2014	Acceptable	43.878949	-116.488985
1196	670	D3	N	Aluminum	Engineer Grade	Clear	Good	672	N DECLARK AVE	6	30	11		0	0	3	TSJ	N DECLARK AVE	E LOCUST ST	North	Single Post	2x2	Soil	Right	Steel	8/20/2014	Acceptable	43.878949	-116.488985
1197	670	R1-1	N	Aluminum	Engineer Grade	Clear	Good	672	STOP	30	30	11		0	10	3	TSJ	N DECLARK AVE	E LOCUST ST	North	Single Post	2x2	Soil	Right	Steel	8/20/2014	Acceptable	43.878949	-116.488985
1198	671	R2-1-20	N	Aluminum	Engineer Grade	Clear	Good	673	SPEED LIMIT	18	24	9	20	10	4	10	TSJ	E LOCUST AVE	MAPLE AVE	West	Single Post	2x2	Soil	Right	Steel	8/20/2014	Acceptable	43.879125	-116.491009
1199	672	D3	N	Aluminum	Engineer Grade	Clear	Good	674	MAPLE AVE	6	30	10		0	0	3	TSJ	MAPLE AVE	E LOCUST ST	North	Single Post	2x2	Soil	Right	Steel	8/20/2014	Acceptable	43.878995	-116.491229
1200	672	D3	N	Aluminum	Engineer Grade	Clear	Good	674	E LOCUST ST	6	30	10		0	0	3	TSJ	MAPLE AVE	E LOCUST ST	North	Single Post	2x2	Soil	Right	Steel	8/20/2014	Acceptable	43.878995	-116.491229
1201	672	R1-1	N	Aluminum	Engineer Grade	Clear	Good	674	STOP	30	30	10		0	10	3	TSJ	MAPLE AVE	E LOCUST ST	North	Single Post	2x2	Soil	Right	Steel	8/20/2014	Acceptable	43.878995	-116.491229
1202	673	R2-1-30	N	Aluminum	Engineer Grade	Partially Obscured	Good	675	SPEED LIMIT	18	24	7	20	10	4	3	TSJ	E LOCUST ST	MAPLE AVE	East	Single Post	2x2	Soil	Right	Steel	8/20/2014	Acceptable	43.879	-116.491089
1203	674	W10-1	N	Aluminum	Engineer Grade	Unknown	Poor	676		30	30	9		0	0	3	TSJ	E LOCUST ST	MAPLE AVE	West	Single Post	2x2	Soil	Right	Steel	8/20/2014	Acceptable	43.87914	-116.491705
1204	675	D3	N	Aluminum	Engineer Grade	Clear	Poor	677	MAPLE ST	6	30	7		0	0	6	TSJ	E PARK ST	MAPLE ST	West	Single Post	3in. Tube	Soil	Right	Steel	8/20/2014	Acceptable	43.877341	-116.49122
1205	675	D3	N	Aluminum	Engineer Grade	Clear	Poor	677	E PARK	6	30	7		0	0	6	TSJ	E PARK ST	MAPLE ST	West	Single Post	3in. Tube	Soil	Right	Steel	8/20/2014	Acceptable	43.877341	-116.49122
1206	676	D3	N	Aluminum	Engineer Grade	Clear	Good	678	N DECLARK AVE	6	36	11		0	0	6	TSJ	E PARK ST	N DECLARK AVE	East	Single Post	2x2	Soil	Right	Steel	8/20/2014	Acceptable	43.877223	-116.489229
1207	676	D3	N	Aluminum	Engineer Grade	Clear	Good	678	E PARK ST	6	30	11		0	0	6	TSJ	E PARK ST	N DECLARK AVE	East	Single Post	2x2	Soil	Right	Steel	8/20/2014	Acceptable	43.877223	-116.489229
1208	676	R1-1	N	Aluminum	Engineer Grade	Clear	Good	678	STOP	24	24	11		0	10	6	TSJ	E PARK ST	N DECLARK AVE	East	Single Post	2x2	Soil	Right	Steel	8/20/2014	Acceptable	43.877223	-116.489229
1209	677	D3	N	Aluminum	Engineer Grade	Clear	Good	679	FERNLEE ST	6	30	11		0	0	5	TSJ	N MOFFATT AVE	FERNLEE ST	North	Single Post	2x2	Soil	Right	Steel	8/20/2014	Acceptable	43.880679	-116.487673
1210	677	D3	E	Aluminum	Engineer Grade	Clear	Good	679	N MOFFATT AVE	6	30	11		0	0	5	TSJ	N MOFFATT AVE	FERNLEE ST	North	Single Post	2x2	Soil	Right	Steel	8/20/2014	Acceptable	43.880679	-116.487673
1211	678	D3	E	Aluminum	Engineer Grade	Clear	Good	680	FERNLEE ST	6	30	9		0	0	5	TSJ	FERNLEE CT	FERNLEE ST	South	Single Post	3in. Tube	Soil	Right	Steel	8/20/2014	Acceptable	43.880837	-116.487396
1212	678	D3	E	Aluminum	Engineer Grade	Clear	Good	680	FERNLEE CT	6	30	9		0	0	5	TSJ	FERNLEE CT	FERNLEE ST	South	Single Post	3in. Tube	Soil	Right	Steel	8/20/2014	Acceptable	43.880837	-116.487396
1213	679	D3	E	Aluminum	Engineer Grade	Clear	Good	681	FERNLEE ST	6	24	9		0	0	5	TSJ	N BUTTE AVE	FERNLEE ST	South	Single Post	3in. Tube	Soil	Right	Steel	8/20/2014	Acceptable	43.880854	-116.486363
1214	679	D3	E	Aluminum	Engineer Grade	Clear	Good	681	N BUTTE AVE	6	24	9		0	0	5	TSJ	N BUTTE AVE	FERNLEE ST	South	Single Post	3in. Tube	Soil	Right	Steel	8/20/2014	Acceptable	43.880854	-116.486363
1215	680	D3	E	Aluminum	Engineer Grade	Clear	Good	682	TERRY DR	6	30	11		0	0	3	TSJ	TERRY DR	N DECLARK AVE	East	Single Post	2x2	Soil	Right	Steel	8/20/2014	Acceptable	43.878133	-116.489138
1216	680	D3	E	Aluminum	Engineer Grade	Clear	Good	682	N DECLARK AVE	6	30	11		0	0	3	TSJ	TERRY DR	N DECLARK AVE	East	Single Post	2x2	Soil	Right	Steel	8/20/2014	Acceptable	43.878133	-116.489138
1217	680	R1-1	E	Aluminum	Engineer Grade	Clear	Good	682	STOP	24	24	11		0	10	3	TSJ	TERRY DR	N DECLARK AVE	East	Single Post	2x2	Soil	Right	Steel	8/20/2014	Acceptable	43.878133	-116.489138
1218	681	R5-X4	E	Aluminum	Engineer Grade	Clear	Good	683		24	24	7		0	0	3	TSJ	TERRY DR	N DECLARK AVE	West	Single Post	2x2	Soil	Right	Steel	8/20/2014	Acceptable	43.878187	-116.489076
1219	682	S2-1P	E	Aluminum	Engineer Grade	Clear	Fair	684		24	30	7		0	0	3	TSJ	N DECLARK AVE	203	South	Single Post	3in. Tube	Soil	Right	Steel	8/20/2014	Acceptable	43.876877	-116.489116
1220	683	D3	E	Aluminum	Engineer Grade	Clear	Good	685	N MOFFATT AVE	6	24	12		0	0	5	TSJ	N MOFFATT AVE	E PHILLIPS ST	North	Single Post	2x2	Soil	Right	Steel	8/20/2014	Acceptable	43.876406	-116.487633
1221	683	D3	E	Aluminum	Engineer Grade	Clear	Good	685	E PHILLIPS ST	6	30	12		0	0	5	TSJ	N MOFFATT AVE	E PHILLIPS ST	North	Single Post	2x2	Soil	Right	Steel	8/20/2014	Acceptable	43.876406	-116.487633
1222	684	D3	E	Aluminum	Engineer Grade	Clear	Fair	686	N MOFFAT AVE	6	30	10		0	0	6	TSJ	N MOFFATT AVE	E PARK ST	North-East	Single Post	2x2	Soil	Right	Steel	8/20/2014	Acceptable	43.87721	-116.487681
1223	684	D3	E	Aluminum	Engineer Grade	Clear	Good	686	E PARK ST	6	24	9		0	0	6	TSJ	N MOFFATT AVE	E PARK ST	North-East	Single Post	2x2	Soil	Right	Steel	8/20/2014	Acceptable	43.87721	-116.487681
1224	685	R1-1	E	Aluminum	Engineer Grade	Clear	Good	687	STOP	30	30	10		0	10	6	TSJ	E PARK ST	N PINE AVE	East	Single Post	2x2	Soil	Right	Steel	8/20/2014	Acceptable	43.877245	-116.485451
1225	686	D3	E	Aluminum	Engineer Grade	Clear	Good	688	N PINE AVE	6	30	10		0	0	6	TSJ	E PARK ST	N PINE AVE	West	Single Post	2x2	Soil	Right	Steel	8/20/2014	Acceptable	43.87735	-116.485172
1226	686	D3	E	Aluminum	Engineer Grade	Clear	Good	688	E PARK ST	6	30	10		0	0	6	TSJ	E PARK ST	N PINE AVE	West	Single Post	2x2	Soil	Right	Steel	8/20/2014	Acceptable	43.87735	-116.485172
1227	686	R1-1	E	Aluminum	Engineer Grade	Clear	Good	688	STOP	24	24	8		0	10	6	TSJ	E PARK ST	N PINE AVE	West	Single Post	2x2	Soil	Right	Steel	8/20/2014	Acceptable	43.87735	-116.485172
1228	687	D3	E	Aluminum	Engineer Grade	Clear	Good	689	N PINE AVE	6	36	11		0	0	6	TSJ	E BLANE ST	N PINE AVE	West	Single Post	2x2	Soil	Right	Steel	8/20/2014	Acceptable	43.878246	-116.485171
1229	687	D3	E	Aluminum	Engineer Grade	Clear	Good	689	E BLANE ST	6	30	11		0	0	6	TSJ	E BLANE ST	N PINE AVE	West	Single Post	2x2	Soil	Right	Steel	8/20/2014	Acceptable	43.878246	-116.485171
1230	687	R1-1	E	Aluminum	Engineer Grade	Clear	Good	689	STOP	30	30	11		0	10	6	TSJ	E BLANE ST	N PINE AVE	West	Single Post	2x2	Soil	Right	Steel	8/20/2014	Acceptable	43.878246	-116.485171
1231	688	R1-1	E	Aluminum	Engineer Grade	Clear	Fair	690	STOP	24	24	9		0	10	6	TSJ	E BLANE ST	N PINE AVE	East	Single Post	3in. Tube	Soil	Right	Steel	8/20/2014	Acceptable	43.87813	-116.485459
1232	689	W9-11	E	Aluminum	Engineer Grade	Clear	Fair	691		18	24	5		0	0	6	TSJ	E PHILLIPS	N PINE AVE	East	Single Post	2x2	Soil	Left	Steel	8/20/2014	Acceptable	43.87654	-116.485007
1233	690	D3	E	Aluminum	Engineer Grade	Clear	Good	692	N PINE ST	6	30	10		0	0	6	TSJ	E PHILLIPS ST	N PINE ST	West	Single Post	2x2	Soil	Right	Steel	8/20/2014	Acceptable	43.876533	-116.485165
1234	690	D3	E	Aluminum	Engineer Grade	Clear	Good	692	E PHILLIPS ST	6	36	10		0	0	6	TSJ	E PHILLIPS ST	N PINE ST	West	Single Post	2x2	Soil	Right	Steel	8/20/2014	Acceptable	43.876533	-116.485165
1235	690	R1-1	E	Aluminum	Engineer Grade	Clear	Good	692	STOP	24	24	10		0	10	6	TSJ	E PHILLIPS ST	N PINE ST	West	Single Post	2x2	Soil	Right	Steel	8/20/2014	Acceptable	43.876533	-116.485165
1236	691	R1-1	E	Aluminum	Engineer Grade	Clear	Good	693	STOP	30	30	8		0	10	6	TSJ	E PHILLIPS	N PINE AVE	West	Single Post	2x2	Soil	Right	Steel	8/20/2014	Acceptable	43.876435	-116.485382
1237	692	I2-4	6	Aluminum	Engineer Grade	Clear	Good	694	EMMETT CITY LIMITS	36	36	9		0	6	5	JRS	E MAIN ST	EAST CITY LIMIT	West	Single Post	2x2	Soil	Right	Steel	11/24/2014	Acceptable	43.875786	-116.463
1238	693	R2-1-40	E	Aluminum	Engineer Grade	Clear	Excellent	695	SPEED LIMIT	24	30	7	45	8	4	6	JRS	E MAIN ST	W OF CITY LIMIT	West	Single Post	2x2	Soil	Right	Steel	11/24/2014	Acceptable	43.875744	-116.464689

Sign ID	Support ID	MUTCD	Facing	Backing	Face Material	Visibility	Sign Condition	Photo No.	Sign Text	Length (in)	Width (in)	Height (in)	Num. Text	Num. Size (in)	Text Size (in)	Offset (ft)	Inspector	Road Name	Location Desc.	Travel Direction	Post Type	Post Size	Post Base	Post Pos.	Post Mat'l.	Date Insp.	Post Rating	Latitude	Longitude
1239	694	OM-3R	E	Aluminum	Engineer Grade	Partially Obscured	Replace	696		12	36	0		0	0	2	JRS	E MAIN ST	CANAL BRIDGE	West	Single Post	2x2	Soil	Left	Steel	11/24/2014	Replace	43.875717	-116.466532
1240	695	OM-3L	W	Aluminum	Engineer Grade	Clear	Poor	697		12	36	0		0	0	2	JRS	E MAIN ST	CANAL BRIDGE	West	Single Post	2x2	Soil	Right	Steel	11/24/2014	Replace	43.875641	-116.466533
1241	696	OM-3L	W	Aluminum	Engineer Grade	Clear	Poor	698		12	36	0		0	0	2	JRS	E MAIN ST	CANAL BRIDGE	East	Single Post	2x2	Soil	Right	Steel	11/24/2014	Replace	43.875643	-116.466631
1242	697	OM-3R	W	Aluminum	Engineer Grade	Clear	Poor	699		12	36	0		0	0	2	JRS	E MAIN ST	CANAL BRIDGE	East	Single Post	2x2	Soil	Left	Steel	11/24/2014	Replace	43.875717	-116.466645
1243	698	I2-4	W	Aluminum	Engineer Grade	Clear	Excellent	700	EMMETT CITY LIMIT	36	36	9		0	0	2	JRS	E MAIN ST	CITY LIMIT	East	Single Post	2x2	Soil	Right	Steel	11/24/2014	Acceptable	43.875645	-116.467806
1244	699	W3-1A	E	Aluminum	Engineer Grade	Clear	Excellent	701	STOP AHEAD SYMBOL	41	41	6		0	0	6	JRS	E MAIN ST	SUBSTATION INTX	West	Single Post	2in. Channel	Soil	Right	Steel	11/24/2014	Repair	43.875724	-116.471334
1245	700	R2-1-40	W	Aluminum	Engineer Grade	Clear	Good	702	SPEED LIMIT	24	30	6.5	45	8	4	7	JRS	E MAIN ST	SUBSTATION RD INTX	East	Single Post	4x4	Soil	Right	Wood	11/24/2014	Acceptable	43.875605	-116.471741
1246	701	D3	E	Aluminum	Engineer Grade	Clear	Good	703	N/ SUBSTATION RD	4	36	8		0	0	7	JRS	E MAIN ST	SUBSTATION RD	West	Single Post	2x2	Soil	Right	Steel	11/24/2014	Acceptable	43.875742	-116.472754
1247	701	R1-1	E	Aluminum	Engineer Grade	Clear	Fair	703	STOP	30	30	7		0	10	7	JRS	E MAIN ST	SUBSTATION RD	West	Single Post	2x2	Soil	Right	Steel	11/24/2014	Acceptable	43.875742	-116.472754
1248	701	R1-4	E	Aluminum	Engineer Grade	Clear	Fair	703	ALL WAY	3	6	5		0	4	7	JRS	E MAIN ST	SUBSTATION RD	West	Single Post	2x2	Soil	Right	Steel	11/24/2014	Acceptable	43.875742	-116.472754
1249	702	D3	S	Aluminum	Engineer Grade	Clear	Good	704	E MAIN ST	6	36	8		0	0	7	JRS	SUBSTATION RD	E MAIN ST INTX	North	Single Post	2x2	Soil	Right	Steel	11/24/2014	Acceptable	43.87557	-116.472742
1250	702	R1-1	S	Aluminum	Engineer Grade	Clear	Fair	704	STOP	30	30	6.5		0	10	7	JRS	SUBSTATION RD	E MAIN ST INTX	North	Single Post	2x2	Soil	Right	Steel	11/24/2014	Acceptable	43.87557	-116.472742
1251	702	R1-4	S	Aluminum	Engineer Grade	Clear	Fair	704	ALL WAY	9	18	5		0	4	7	JRS	SUBSTATION RD	E MAIN ST INTX	North	Single Post	2x2	Soil	Right	Steel	11/24/2014	Acceptable	43.87557	-116.472742
1252	702	D3	W	Aluminum	Engineer Grade	Clear	Good	704	SUBSTATION RD	6	36	8		0	0	7	JRS	SUBSTATION RD	E MAIN ST INTX	North	Single Post	2x2	Soil	Right	Steel	11/24/2014	Acceptable	43.87557	-116.472742
1253	703	R1-1	W	Aluminum	Engineer Grade	Clear	Fair	705	STOP	30	30	7		0	10	7	JRS	E MAIN ST	SUBSTATION INTX	East	Single Post	2x2	Soil	Right	Steel	11/24/2014	Acceptable	43.875609	-116.472932
1254	703	R1-4	W	Aluminum	Engineer Grade	Clear	Fair	705	ALL WAY	9	18	5		0	4	7	JRS	E MAIN ST	SUBSTATION INTX	East	Single Post	2x2	Soil	Right	Steel	11/24/2014	Acceptable	43.875609	-116.472932
1255	704	R1-1	N	Aluminum	Engineer Grade	Clear	Good	706	STOP	30	30	7		0	10	7	JRS	SUBSTATION RD	E MAIN ST INTX	South	Single Post	2x2	Soil	Right	Steel	11/24/2014	Acceptable	43.87583	-116.472913
1256	704	R1-4	N	Aluminum	Engineer Grade	Clear	Fair	706	ALL WAY	9	18	5		0	4	7	JRS	SUBSTATION RD	E MAIN ST INTX	South	Single Post	2x2	Soil	Right	Steel	11/24/2014	Acceptable	43.87583	-116.472913
1257	705	R2-1-35	S	Aluminum	Engineer Grade	Clear	Fair	707	SPEED LIMIT	18	24	6	35	10	4	7	JRS	SUBSTATION RD	E MAIN ST INTX	North	Single Post	4x4	Soil	Right	Wood	11/24/2014	Acceptable	43.875927	-116.472813
1258	706	R2-1-35	E	Aluminum	Engineer Grade	Clear	Good	708	SPEED LIMIT	24	30	7	35	10	4	11	JRS	E MAIN ST	SUBSTATION	West	Single Post	4x4	Soil	Right	Wood	11/24/2014	Acceptable	43.875729	-116.4737
1259	707	W3-1A	W	Aluminum	Engineer Grade	Clear	Excellent	709	STOP AHEAD SYMBOL	41	41	6		0	0	9	JRS	E MAIN ST	W OF SUBSTATION	East	Single Post	4x4	Soil	Right	Wood	11/24/2014	Acceptable	43.875616	-116.475229

Appendix J

FHWA Maintaining Retroreflectivity Handout

THIS PAGE INTENTIONALLY LEFT BLANK

KNOW YOUR RETRO 2007*

U.S. Department of Transportation
Federal Highway Administration

Maintaining Traffic Sign Retroreflectivity

**updated in 2013 to reflect current MUTCD compliance dates*

FHWA-SA-07-020 *(Revised 2013)*

This document is referenced in **Section 2A.08** of the *Manual on Uniform Traffic Control Devices* (MUTCD). Please be sure to review the methods discussed on pages two and three, along with the related procedures that make each method reliable and meaningful in its use to maintain signs above the minimum retroreflectivity levels. A full report on these methods can be found at www.fhwa.dot.gov/retro.

SCHEDULE

Method:

Agencies have until June 14, 2014 to implement and continue to use an assessment or management method that is designed to maintain regulatory and warning sign retroreflectivity at or above the minimum levels in Table 2A–3 of the 2009 MUTCD.

Although guide signs are included in the minimum retroreflectivity levels table, there is not a specified compliance date for guide signs (including street name signs) to be addressed by an agency's method. Guide signs are to be added to an agency's management or assessment method as resources allow.

Sign Replacement:

Agencies need to replace any sign they identify as not meeting the established minimum retroreflectivity levels. Agencies' schedules for replacing signs are based on resources and relative priorities rather than specific compliance dates.

Traffic signs provide important information to road users. To be effective, traffic sign visibility must be maintained during daytime and nighttime conditions. In addition to Section 2A.08, the MUTCD addresses sign visibility in several other places, including Sections 1A.03, 1A.04, 1A.05, 2A.06, 2A.07, and 2A.22. These sections address factors such as uniformity, design, placement, operation, and maintenance.

The Standard in Section 2A.08 requires agencies to use a maintenance method that is designed to maintain traffic signs at or above minimum levels of retroreflectivity in Table 2A-3. Including Table 2A-3 in the MUTCD does not imply that an agency must measure the retroreflectivity of every sign. Rather, the MUTCD summarizes five methods that agencies can use to maintain traffic sign retroreflectivity at or above the minimum levels. These methods are listed in Section 2A.08 and are discussed on pages two and three of this document. The Standard promotes safety while providing sufficient flexibility for agencies to choose one or more maintenance methods that best match their specific conditions.

This Standard does NOT imply all signs need to be replaced. The intent is to identify and replace signs that no longer meet the needs of nighttime drivers.

The MUTCD language recognizes that there may be some individual signs that do not meet the minimum retroreflectivity levels at a particular point in time. Reasons for this include vandalism, weather, or damage due to a crash. As long as the agency is using one of the methods (with appropriate procedures) to maintain their signs, they are considered to be in compliance with this Standard.

The methods recommended in the MUTCD are broken into two categories: management methods and assessment methods. Assessment methods involve sending personnel out to examine and assess the retroreflective performance of signs. Some agencies may find this approach to be more labor intensive and turn to management methods as an alternative. Management methods may require less field work (or none at all in some cases) but may also result in replacing some signs that still have useful life left in terms of retroreflectivity. These recommended methods are discussed on pages two and three of this document and are described in detail in a full report entitled "Methods for Maintaining Traffic Sign Retroreflectivity," available at www.fhwa.dot.gov/retro.

ASSESSMENT METHODS

Assessment methods involve evaluating individual signs within an agency's jurisdiction. There are two basic assessment methods identified in the 2009 MUTCD: visual nighttime inspection and measured sign retroreflectivity.

1. VISUAL NIGHTTIME INSPECTION METHOD

In the visual nighttime inspection method, on-the-fly assessments of retroreflectivity are made by an inspector during nighttime conditions. The following are keys to successfully implementing the visual nighttime inspection method:

A. Develop guidelines and procedures for inspectors to use in conducting the nighttime inspections and train inspectors in the use of these procedures.

B. Conduct inspections at normal speed from the travel lane(s).

C. Conduct inspections using low-beam headlights while minimizing interior vehicle lighting.

D. Evaluate signs at typical viewing distances so that adequate time is available for an appropriate driving response.

One or more of the following procedures should be used to properly implement this method:

Calibration Signs Procedure (for Visual Nighttime Inspection Method)

Calibration signs have known retroreflectivity levels at or above minimum levels. These calibration signs are set up so the inspector views the calibration signs in a manner similar to nighttime field inspections. A trained inspector views calibration signs prior to conducting the nighttime inspection described in 1 A-D above. The inspector uses the visual appearance of the calibration signs to establish the evaluation threshold for that night's inspection. During the nighttime drive-through inspection of in-service signs, if the inspector believes a sign appears to be less bright than the calibration signs viewed earlier, the in-service sign should be replaced. The following factors provide additional information on the use of this procedure:

- Calibration signs are needed for each color of sign in Table 2A-3 of the 2009 MUTCD.
- Calibration signs are viewed at typical viewing distances using the inspection vehicle.
- Calibration signs need to be properly stored between inspections so that their retroreflectivity does not deteriorate over time.

Comparison Panels Procedure (for Visual Nighttime Inspection Method)

Comparison panels are fabricated with retroreflectivity levels at or above the minimum levels. The trained inspector makes an initial nighttime visual inspection described in 1 A-D above to identify signs that are obviously above or below the minimum retroreflectivity values as well as those the inspector considers to be marginal. Those signs designated as obviously below the minimum retroreflectivity values are scheduled for replacement. For signs considered marginal, a supplementary nighttime inspection is conducted by attaching a comparison panel to the in-service sign. With a flashlight, the inspector views the in-service sign along with the comparison panel to determine whether the in-service sign appears brighter or less bright than the comparison panel. If the in-service sign appears less bright than the comparison panel, the in-service sign should be replaced.

Consistent Parameters Procedure (for Visual Nighttime Inspection Method)

For this procedure, nighttime inspections described in 1 A-D above are conducted by a trained inspector under similar factors that were used in the research to develop the minimum retroreflectivity levels. These traits include:

- Using an inspector who is at least 60 years old.
- Using a sport utility vehicle or pick-up truck from which to make the observations.
- Using a model year 2000 or newer vehicle.

The trained inspector makes a judgment call as to whether an in-service sign meets their nighttime driving needs. Those signs judged not to meet the visual driving needs should be replaced. Note, the three factors listed here are specific to this procedure and are not required for visual nighttime inspections using the calibration signs procedure or the comparison panels procedure.

2. MEASURED SIGN RETROREFLECTIVITY METHOD

In this method the retroreflectivity of a sign is measured with a handheld or mobile retroreflectometer and directly compared to the minimum level appropriate for that sign. ASTM E1709, Standard Test Method for Measurement of Retroreflective Signs Using a Portable Retroreflectometer, provides the standard method for measuring sign retroreflectivity with handheld instruments. If the measured sign retroreflectivity value is less than the appropriate level in Table 2A-3, the sign should be replaced.

MANAGEMENT METHODS

Management methods provide an agency with the ability to maintain sign retroreflectivity without having to physically inspect each individual sign. While it is not required by the MUTCD, some agencies have chosen to determine the sheeting type and age or retroreflectivity levels of existing signs before using a management method. This is done by those agencies to prevent signs currently near or below minimum levels from being left in place several additional years. The 2009 MUTCD identifies three management methods:

1. EXPECTED SIGN LIFE METHOD

In this method, the agency monitors the age of individual signs and replaces them before they are expected to degrade below the minimum levels in Table 2A-3 of the 2009 MUTCD. The retroreflectivity life of a sign may vary by such factors as type of sheeting, geographic location, color, and direction the sign faces. This method depends on knowing the age and type of sheeting used for the signs. Agencies may choose to consider weathering deck results, measurements of field signs, sign sheeting warranties, or other criteria as the basis for the expected sign life. A common approach for identifying the age of individual signs uses a label on the sign to mark the year of fabrication or installation. Agencies can also use sign management systems to track the age of individual signs.

2. BLANKET REPLACEMENT METHOD

In this method, an agency manages signs in groups rather than as individual signs. An agency may choose to group signs by geographic area, roadway corridor, type of sheeting, or sign category (e.g., warning signs). The sign replacement interval is based on the expected sign life for the sign sheeting in the group with the shortest expected life. This method typically obligates an agency to replace all of the designated signs within a group, even if a sign was recently replaced due to issues such as vandalism or damage.

3. CONTROL SIGNS METHOD

In this method, agencies monitor the performance of a control sample of signs that represent a larger group of signs. Agencies track the retroreflectivity of the control signs to determine when replacement of the larger group is necessary based on the performance of the control signs.

- Agencies should develop a sampling plan to determine the appropriate number and type of control signs needed to represent the larger group of signs. Samples should represent the entire group, including such factors as sign sheeting type and color.
- Control signs may be actual signs in the field or signs in a maintenance yard (for convenience).
- Agencies should monitor the retroreflectivity of the control signs using an assessment method.

OTHER METHODS

Other assessment or management methods that are developed based on engineering studies can be used as long as they are designed to maintain minimum levels in Table 2A-3 of the 2009 MUTCD, as stated in the MUTCD Standard statement in Section 2A.08.

Excerpt from Part 2 of the 2009 MUTCD

Section 2A.08 Maintaining Minimum Retroreflectivity

Support:

01 Retroreflectivity is one of several factors associated with maintaining nighttime sign visibility (see Section 2A.22).

Standard:

02 **Public agencies or officials having jurisdiction shall use an assessment or management method that is designed to maintain sign retroreflectivity at or above the minimum levels in Table 2A-3.**

Support:

03 Compliance with the Standard in Paragraph 2 is achieved by having a method in place and using the method to maintain the minimum levels established in Table 2A-3. Provided that an assessment or management method is being used, an agency or official having jurisdiction would be in compliance with the Standard in Paragraph 2 even if there are some individual signs that do not meet the minimum retroreflectivity levels at a particular point in time.

Guidance:

04 *Except for those signs specifically identified in Paragraph 6, one or more of the following assessment or management methods should be used to maintain sign retroreflectivity:*

A. Visual Nighttime Inspection—The retroreflectivity of an existing sign is assessed by a trained sign inspector conducting a visual inspection from a moving vehicle during nighttime conditions. Signs that are visually identified by the inspector to have retroreflectivity below the minimum levels should be replaced.

B. Measured Sign Retroreflectivity—Sign retroreflectivity is measured using a retroreflectometer. Signs with retroreflectivity below the minimum levels should be replaced.

C. Expected Sign Life—When signs are installed, the installation date is labeled or recorded so that the age of a sign is known. The age of the sign is compared to the expected sign life. The expected sign life is based on the experience of sign retroreflectivity degradation in a geographic area compared to the minimum levels. Signs older than the expected life should be replaced.

D. Blanket Replacement—All signs in an area/corridor, or of a given type, should be replaced at specified intervals. This eliminates the need to assess retroreflectivity or track the life of individual signs. The replacement interval is based on the expected sign life, compared to the minimum levels, for the shortest-life material used on the affected signs.

E. Control Signs—Replacement of signs in the field is based on the performance of a sample of control signs. The control signs might be a small sample located in a maintenance yard or a sample of signs in the field. The control signs are monitored to determine the end of retroreflective life for the associated signs. All field signs represented by the control sample should be replaced before the retroreflectivity levels of the control sample reach the minimum levels.

F. Other Methods—Other methods developed based on engineering studies can be used.

Support:

05 Additional information about these methods is contained in the 2007 Edition of FHWA's "Maintaining Traffic Sign Retroreflectivity" (see Section 1A.11).

Option:

06 Highway agencies may exclude the following signs from the retroreflectivity maintenance guidelines described in this Section:

A. Parking, Standing, and Stopping signs (R7 and R8 series)
B. Walking/Hitchhiking/Crossing signs (R9 series, R10-1 through R10-4b)
C. Acknowledgment signs
D. All signs with blue or brown backgrounds
E. Bikeway signs that are intended for exclusive use by bicyclists or pedestrians

Note: The referenced document is actually this four-page brochure you are reading.

Table 2A-3.

Minimum Maintained Retroreflectivity Levels[1]

Sign Color	Sheeting Type (ASTM D4956-04)				Additional Criteria
	Beaded Sheeting			Prismatic Sheeting	
	I	II	III	III, IV, VI, VII, VIII, IX, X	
White on Green	W*; G ≥ 7	W*; G ≥ 15	W*; G ≥ 25	W ≥ 250; G ≥ 25	Overhead
	W*; G ≥ 7	W ≥ 120; G ≥ 15			Post-mounted
Black on Yellow or Black on Orange	Y*; O*	Y ≥ 50; O ≥ 50			[2]
	Y*; O*	Y ≥ 75; O ≥ 75			[3]
White on Red	W ≥ 35; R ≥ 7				[4]
Black on White	W ≥ 50				–

[1] The minimum maintained retroreflectivity levels shown in this table are in units of cd/lx/m² measured at an observation angle of 0.2° and an entrance angle of -4.0°.
[2] For text and fine symbol signs measuring at least 48 inches and for all sizes of bold symbol signs
[3] For text and fine symbol signs measuring less than 48 inches
[4] Minimum sign contrast ratio ≥ 3:1 (white retroreflectivity ÷ red retroreflectivity)
* This sheeting type shall not be used for this color for this application.

2009 MUTCD Section Number(s)	2009 MUTCD Section Title	Specific Provision	Compliance Date
2A.08	Maintaining Minimum Retroreflectivity	Implementation and continued use of an assessment or management method that is designed to maintain regulatory and warning sign retroreflectivity at or above the established minimum levels (see Paragraph 2)	**June 14, 2014** (date established in Revision 2 to 2009 MUTCD)*

** Types of signs other than regulatory or warning are to be added to an agency's management or assessment method as resources allow.*

Appendix K

Traffic Volume Projections

THIS PAGE INTENTIONALLY LEFT BLANK

AADT Volume Projection Report

Route
Segment 000417 Milepost From 100.000
Milepost To 101.342

Traffic Data 2014
Start 2035
End Projection 2040

Year	Segment	Milepost From	Milepost To	AADT	CAADT	DHV	DHV %	CDHV	CDHV %	DIR	From Description	To Description
2014	000417	100.000	100.583	1,700	0	170	10.00	0		60/40%	MAIN ST, EMMETT	S WASHINGTON AVE(SH-52)
		100.583	100.948	1,000	0	100	10.00	0		60/40%	S WASHINGTON AVE(SH-52)	S JOHNS AVE
		100.948	101.331	1,500	0	150	10.00	0		60/40%	S JOHNS AVE	S PINE ST
		101.331	101.342	1,500	0	150	10.00	0		60/40%	S PINE ST	
	2014	**Weighted averages**		**1,450**	**0**	**150**	**10.00**	**0**				
2035	000417	100.000	100.583	2,240	0	220	9.82	0		60/40%	MAIN ST, EMMETT	S WASHINGTON AVE(SH-52)
		100.583	100.948	1,320	0	130	9.85	0		60/40%	S WASHINGTON AVE(SH-52)	S JOHNS AVE
		100.948	101.331	1,970	0	200	10.15	0		60/40%	S JOHNS AVE	S PINE ST
		101.331	101.342	1,970	0	200	10.15	0		60/40%	S PINE ST	
	2035	**Weighted averages**		**1,910**	**0**	**190**	**9.93**	**0**				
2040	000417	100.000	100.583	2,360	0	240	10.17	0		60/40%	MAIN ST, EMMETT	S WASHINGTON AVE(SH-52)
		100.583	100.948	1,390	0	140	10.07	0		60/40%	S WASHINGTON AVE(SH-52)	S JOHNS AVE
		100.948	101.331	2,090	0	210	10.05	0		60/40%	S JOHNS AVE	S PINE ST
		101.331	101.342	2,090	0	210	10.05	0		60/40%	S PINE ST	
	2040	**Weighted averages**		**2,020**	**0**	**200**	**10.11**	**0**				

AADT Volume Projection Report

Route				Traffic Data	2014
Segment	000403	Milepost From	100.875	Start	2035
		Milepost To	101.875	End Projection	2040

Year	Segment	Milepost From	Milepost To	AADT	CAADT	DHV	DHV %	CDHV	CDHV %	DIR	From Description	To Description
2014	000403	100.875	101.372	3,200	70	450	14.06	10	14.29	60/40%	MILL RD	S BOISE AVE
		101.372	101.510	1,200	70	170	14.17	10	14.29	60/40%	S BOISE AVE	WASHINGTON AVE (SH-52)
		101.510	101.875	2,400	70	340	14.17	10	14.29	60/40%	WASHINGTON AVE (SH-52)	
	2014	**Weighted averages**		**2,630**	**70**	**370**	**14.11**	**10**	**14.29**			
2035	000403	100.875	101.372	3,330	70	470	14.11	10	14.29	60/40%	MILL RD	S BOISE AVE
		101.372	101.510	1,250	70	170	13.60	10	14.29	60/40%	S BOISE AVE	WASHINGTON AVE (SH-52)
		101.510	101.875	2,500	70	350	14.00	10	14.29	60/40%	WASHINGTON AVE (SH-52)	
	2035	**Weighted averages**		**2,740**	**70**	**380**	**14.00**	**10**	**14.29**			
2040	000403	100.875	101.372	3,360	70	470	13.99	10	14.29	60/40%	MILL RD	S BOISE AVE
		101.372	101.510	1,260	70	180	14.29	10	14.29	60/40%	S BOISE AVE	WASHINGTON AVE (SH-52)
		101.510	101.875	2,520	70	350	13.89	10	14.29	60/40%	WASHINGTON AVE (SH-52)	
	2040	**Weighted averages**		**2,760**	**70**	**390**	**13.99**	**10**	**14.29**			

AADT Volume Projection Report

Route
Segment 000409 Milepost From 101.511
Milepost To 102.371

Traffic Data 2014
Start 2035
End Projection 2075

Year	Segment	Milepost From	Milepost To	AADT	CAADT	DHV	DHV %	CDHV	CDHV %	DIR	From Description	To Description
2014	000409	101.511	101.512	1,400	380	200	14.29	40	10.53	60/40%		SH-16
		101.512	101.747	5,000	380	700	14.00	40	10.53	60/40%	SH-16	E 12TH ST
		101.747	102.249	4,800	120	670	13.96	10	8.33	60/40%	E 12TH ST	E 4TH ST
		102.249	102.371	4,000	430	560	14.00	40	9.30	60/40%	E 4TH ST	
	2014	**Weighted averages**		**4,740**	**240**	**660**	**13.98**	**20**	**9.07**			
2035	000409	101.511	101.512	1,450	390	200	13.79	40	10.26	60/40%		SH-16
		101.512	101.747	5,200	390	730	14.04	40	10.26	60/40%	SH-16	E 12TH ST
		101.747	102.249	5,000	120	700	14.00	10	8.33	60/40%	E 12TH ST	E 4TH ST
		102.249	102.371	4,160	440	580	13.94	40	9.09	60/40%	E 4TH ST	
	2035	**Weighted averages**		**4,930**	**240**	**690**	**14.00**	**20**	**8.97**			
2075	000409	101.511	101.512	1,550	400	220	14.19	40	10.00	60/40%		SH-16
		101.512	101.747	5,590	400	780	13.95	40	10.00	60/40%	SH-16	E 12TH ST
		101.747	102.249	5,380	130	750	13.94	10	7.69	60/40%	E 12TH ST	E 4TH ST
		102.249	102.371	4,460	460	620	13.90	40	8.70	60/40%	E 4TH ST	
	2075	**Weighted averages**		**5,300**	**250**	**740**	**13.94**	**20**	**8.47**			

AADT Volume Projection Report

Route				Traffic Data	2014
Segment	011230	Milepost From	100.000	Start	2035
		Milepost To	101.001	End Projection	2040

Year	Segment	Milepost From	Milepost To	AADT	CAADT	DHV	DHV %	CDHV	CDHV %	DIR	From Description	To Description
2014	011230	100.000	101.001	1,300	0	130	10.00	0		60/40%	JOHNS AVE	N SUB STATION RD
	2014	**Weighted averages**		**1,300**	**0**	**130**	**10.00**	**0**				
2035	011230	100.000	101.001	1,980	0	200	10.10	0		60/40%	JOHNS AVE	N SUB STATION RD
	2035	**Weighted averages**		**1,980**	**0**	**200**	**10.10**	**0**				
2040	011230	100.000	101.001	2,150	0	210	9.77	0		60/40%	JOHNS AVE	N SUB STATION RD
	2040	**Weighted averages**		**2,150**	**0**	**210**	**9.77**	**0**				

AADT Volume Projection Report

Route				Traffic Data	2014
Segment	005570	Milepost From	3.141	Start	2035
		Milepost To	5.117	End Projection	2040

Year	Segment	Milepost From	Milepost To	AADT	CAADT	DHV	DHV %	CDHV	CDHV %	DIR	From Description	To Description
2014	005570	3.141	4.379	3,500	480	490	14.00	50	10.42	60/40%		WASHINGTON AVE (SH-52)
		4.379	4.742	6,600	600	790	11.97	50	8.33	60/40%	WASHINGTON AVE (SH-52)	JOHNS AVE
		4.742	5.116	4,400	630	530	12.05	50	7.94	60/40%	JOHNS AVE	N PINE AVE
		5.116	5.117	3,100	680	370	11.94	60	8.82	60/40%	N PINE AVE	
	2014	**Weighted averages**		**4,240**	**530**	**550**	**13.26**	**50**	**9.56**			
2035	005570	3.141	4.379	3,640	490	510	14.01	50	10.20	60/40%		WASHINGTON AVE (SH-52)
		4.379	4.742	8,110	850	970	11.96	70	8.24	60/40%	WASHINGTON AVE (SH-52)	JOHNS AVE
		4.742	5.116	5,460	890	650	11.90	80	8.99	60/40%	JOHNS AVE	N PINE AVE
		5.116	5.117	3,890	970	470	12.08	80	8.25	60/40%	N PINE AVE	
	2035	**Weighted averages**		**4,810**	**630**	**620**	**13.23**	**60**	**9.61**			
2040	005570	3.141	4.379	3,670	490	510	13.90	50	10.20	60/40%		WASHINGTON AVE (SH-52)
		4.379	4.742	8,470	910	1,020	12.04	80	8.79	60/40%	WASHINGTON AVE (SH-52)	JOHNS AVE
		4.742	5.116	5,710	960	680	11.91	80	8.33	60/40%	JOHNS AVE	N PINE AVE
		5.116	5.117	4,080	1,030	490	12.01	90	8.74	60/40%	N PINE AVE	
	2040	**Weighted averages**		**4,940**	**660**	**640**	**13.18**	**60**	**9.59**			

AADT Volume Projection Report

Route				Traffic Data	2014
Segment	005580	Milepost From	6.767	Start	2035
		Milepost To	7.510	End Projection	2040

Year	Segment	Milepost From	Milepost To	AADT	CAADT	DHV	DHV %	CDHV	CDHV %	DIR	From Description	To Description
2014	005580	6.767	7.508	2,100	100	250	11.90	10	10.00	60/40%	E MAIN ST	WATERWHEEL RD
		7.508	7.510	1,800	180	220	12.22	20	11.11	60/40%	WATERWHEEL RD	
	2014	**Weighted averages**		**2,100**	**100**	**250**	**11.91**	**10**	**10.00**			
2035	005580	6.767	7.508	2,560	140	310	12.11	10	7.14	60/40%	E MAIN ST	WATERWHEEL RD
		7.508	7.510	2,220	260	270	12.16	20	7.69	60/40%	WATERWHEEL RD	
	2035	**Weighted averages**		**2,560**	**140**	**310**	**12.11**	**10**	**7.14**			
2040	005580	6.767	7.508	2,670	150	320	11.99	10	6.67	60/40%	E MAIN ST	WATERWHEEL RD
		7.508	7.510	2,310	270	280	12.12	20	7.41	60/40%	WATERWHEEL RD	
	2040	**Weighted averages**		**2,670**	**150**	**320**	**11.99**	**10**	**6.67**			

AADT Volume Projection Report

Route	SH016			Traffic Data	2014
Segment	001390	Milepost From	112.555	Start	2035
		Milepost To	113.907	End Projection	2040

Year	Segment	Milepost From	Milepost To	AADT	CAADT	DHV	DHV %	CDHV	CDHV %	DIR	From Description	To Description
2014	001390	112.555	113.546	7,600	420	820	10.79	30	7.14	60/40%	SUB STATION RD	S JOHNS AVE
		113.546	113.907	7,400	470	800	10.81	40	8.51	60/40%	S JOHNS AVE	SH-52, EMMETT
	2014	**Weighted averages**		**7,550**	**430**	**810**	**10.80**	**30**	**7.51**			
2035	001390	112.555	113.546	10,080	640	1,090	10.81	50	7.81	60/40%	SUB STATION RD	S JOHNS AVE
		113.546	113.907	9,830	720	1,070	10.89	50	6.94	60/40%	S JOHNS AVE	SH-52, EMMETT
	2035	**Weighted averages**		**10,010**	**660**	**1,080**	**10.83**	**50**	**7.58**			
2040	001390	112.555	113.546	10,670	690	1,160	10.87	50	7.25	60/40%	SUB STATION RD	S JOHNS AVE
		113.546	113.907	10,410	780	1,130	10.85	60	7.69	60/40%	S JOHNS AVE	SH-52, EMMETT
	2040	**Weighted averages**		**10,600**	**710**	**1,150**	**10.87**	**50**	**7.37**			

AADT Volume Projection Report

Route	SH052			Traffic Data	2014
Segment	002010	Milepost From	30.422	Start	2035
		Milepost To	31.810	End Projection	2040

Year	Segment	Milepost From	Milepost To	AADT	CAADT	DHV	DHV %	CDHV	CDHV %	DIR	From Description	To Description
2014	002010	30.422	30.786	11,000	470	1,200	10.91	40	8.51	60/40%	SH-16	10TH ST, EMMETT
		30.786	31.352	11,000	510	1,100	10.00	40	7.84	60/40%	10TH ST	1ST ST
		31.352	31.419	10,500	310	1,050	10.00	20	6.45	60/40%	1ST ST	MAIN ST
		31.419	31.484	9,300	310	930	10.00	20	6.45	60/40%	MAIN ST	PARK ST
		31.484	31.544	10,500	360	1,050	10.00	30	8.33	60/40%	PARK ST	CANAL ST
		31.544	31.810	11,500	620	1,150	10.00	40	6.45	60/40%	CANAL ST	CARSON ST
	2014	**Weighted averages**		**10,970**	**500**	**1,120**	**10.24**	**40**	**7.64**			
2035	002010	30.422	30.786	14,560	720	1,590	10.92	50	6.94	60/40%	SH-16	10TH ST, EMMETT
		30.786	31.352	14,570	780	1,460	10.02	50	6.41	60/40%	10TH ST	1ST ST
		31.352	31.419	13,870	470	1,390	10.02	30	6.38	60/40%	1ST ST	MAIN ST
		31.419	31.484	12,290	470	1,230	10.01	30	6.38	60/40%	MAIN ST	PARK ST
		31.484	31.544	13,880	550	1,390	10.01	40	7.27	60/40%	PARK ST	CANAL ST
		31.544	31.810	15,250	950	1,530	10.03	70	7.37	60/40%	CANAL ST	CARSON ST
	2035	**Weighted averages**		**14,530**	**760**	**1,490**	**10.26**	**50**	**6.77**			
2040	002010	30.422	30.786	15,410	780	1,680	10.90	60	7.69	60/40%	SH-16	10TH ST, EMMETT
		30.786	31.352	15,420	840	1,540	9.99	60	7.14	60/40%	10TH ST	1ST ST
		31.352	31.419	14,680	510	1,470	10.01	40	7.84	60/40%	1ST ST	MAIN ST
		31.419	31.484	13,010	510	1,300	9.99	40	7.84	60/40%	MAIN ST	PARK ST

Year	Segment	Milepost From	Milepost To	AADT	CAADT	DHV	DHV %	CDHV	CDHV %	DIR	From Description	To Description
2040	002010	31.484	31.544	14,690	590	1,470	10.01	40	6.78	60/40%	PARK ST	CANAL ST
		31.544	31.810	16,150	1,020	1,610	9.97	70	6.86	60/40%	CANAL ST	CARSON ST
	2040	**Weighted averages**		**15,380**	**820**	**1,570**	**10.23**	**60**	**7.28**			

AADT Volume Projection Report

Route				Traffic Data	2014
Segment	005590	Milepost From	1.790	Start	2035
		Milepost To	2.812	End Projection	2040

Year	Segment	Milepost From	Milepost To	AADT	CAADT	DHV	DHV %	CDHV	CDHV %	DIR	From Description	To Description
2014	005590	1.790	2.053	4,500	170	540	12.00	10	5.88	60/40%	SH-16	E 12TH ST
		2.053	2.812	3,600	180	430	11.94	20	11.11	60/40%	E 12TH ST	E MAIN ST
	2014	**Weighted averages**		**3,830**	**180**	**460**	**11.96**	**20**	**9.77**			
2035	005590	1.790	2.053	5,480	240	660	12.04	20	8.33	60/40%	SH-16	E 12TH ST
		2.053	2.812	4,390	260	530	12.07	20	7.69	60/40%	E 12TH ST	E MAIN ST
	2035	**Weighted averages**		**4,670**	**250**	**560**	**12.07**	**20**	**7.86**			
2040	005590	1.790	2.053	5,710	260	690	12.08	20	7.69	60/40%	SH-16	E 12TH ST
		2.053	2.812	4,580	270	550	12.01	20	7.41	60/40%	E 12TH ST	E MAIN ST
	2040	**Weighted averages**		**4,870**	**270**	**590**	**12.03**	**20**	**7.48**			

THIS PAGE INTENTIONALLY LEFT BLANK

Appendix L

CIP Cost Estimates

THIS PAGE INTENTIONALLY LEFT BLANK

Washington Avenue Signal Backplates

ITEM	UNIT	UNIT PRICE	QUANTITY	COST	COMMENT
Reflective Signal Backplate	EA	$ 200.00	20	$ 4,000.00	$200/signal head, 12 at Main + 8 at 4th
			TOTAL:	**$ 4,000.00**	

Washington/6th St. Ped Crossing Improvements

ITEM	UNIT	UNIT PRICE	QUANTITY	COST	COMMENT
ADA Curb Ramp	EA	$ 1,500.00	4	$ 6,000.00	
Thermoplastic Pavement Markings	SF	$ 10.00	380	$ 3,800.00	standard crosswalk (1' lines) + stop bar (18")
Traffic Signs	EA	$ 200.00	10	$ 2,000.00	
			Subtotal:	$ 11,800.00	
Mobilization	LS	10%		$ 1,200.00	
Contingency	LS	25%		$ 3,300.00	
			TOTAL:	**$ 16,300.00**	

Washington/10th St. Ped Crossing Improvements

ITEM	UNIT	UNIT PRICE	QUANTITY	COST	COMMENT
ADA Curb Ramp	EA	$ 1,500.00	4	$ 6,000.00	
Thermoplastic Pavement Markings	SF	$ 10.00	380	$ 3,800.00	Standard crosswalk (1' lines) + stop bar (18")
Traffic Signs	EA	$ 200.00	10	$ 2,000.00	
			Subtotal:	$ 11,800.00	
Mobilization	LS	10%		$ 1,200.00	
Contingency	LS	25%		$ 3,300.00	
			TOTAL:	**$ 16,300.00**	

Advance Warning Signals

ITEM	UNIT	UNIT PRICE	QUANTITY	COST	COMMENT
Advance Warning Signal - Ground Mounted	EA	$ 20,000.00	6	$ 120,000.00	$20k/each approach
			TOTAL:	**$ 120,000.00**	

Canal Piping and Move Gem Sports Sign

ITEM	UNIT	UNIT PRICE	QUANTITY	COST	COMMENT
Excavation	CY	$ 10.00	1066.67	$ 10,666.67	
48" Irrigation Pipe	FT	$ 410.00	150	$ 61,500.00	
6'x6' Utility Vault	EA	$ 8,500.00	1	$ 8,500.00	Inc. delivery to Emmett - Nampa Oldcastle
Subbase	T	$ 15.00	173.00	$ 2,595.00	1' deep
Base	T	$ 18.00	85.00	$ 1,530.00	6" deep
Asphalt Paving	T	$ 80.00	45.00	$ 3,600.00	260 SY, 3" deep
Concrete Sidewalk	SY	$ 75.00	67.00	$ 5,025.00	5' wide
Curb and Gutter	FT	$ 40.00	125.00	$ 5,000.00	
			Subtotal:	$ 98,500.00	
Mobilization	LS	10%		$ 9,900.00	
Contingency	LS	25%		$ 27,100.00	
Engineering	LS	20%		$ 27,100.00	
Environmental	LS	10%		$ 16,300.00	
			TOTAL:	**$ 178,900.00**	

The opinion of most probable cost herein is based on our perception of current conditions at the project location. This estimate reflects our opinion of probable costs at this time and is subject to change as the project design matures. Keller Associates has no control over variances in the cost of labor, materials, equipment, services provided by others, contractor's methods of determining prices, competitive bidding or market conditions, practices or bidding strategies. Keller Associates cannot and does not warrant or guarantee that proposals, bids or actual construction costs will not vary from the costs presented herein.

Key Number	NA	Project Number	Voided Slab Bridge Structure	Date	Jan-18
Location	Main Street Farmers Coop Canal Bridge, Emmett, ID			District	
Segment Code		Begin Mile Post	End Mile Post	Length in Miles	

1a. Preliminary Engineering (PE) 5% of Line 15	$ 35,375.00
1b. Preliminary Engineering by Consultant (PEC) 20% of line 15	$ 141,500.00
2. Right-of-Way: Number of Parcels _____ Number of Relocations _____	$ -
3. Utility Adjustments: ☐ Work ☐ Materials ☐ By State ☑ By Others	N/A
4. Earthwork	N/A
5. Drainage and Minor Structures	N/A
6. Pavement and Base	N/A
7. Railroad Crossing:	N/A
Grade/Separation Structure	
At-Grade Signals Yes No	
8. Bridges/Grade Separation Structures:	$ 705,000.00
☑ New Structure Length/Width L=50', W=50'	
Location	
☐ Repair/Widening/Rehabilitation Length/Width	
Location	
9. Traffic Items (Delineators, Signing, Channelization, Lighting, and Signals)	N/A
10. Construction Traffic Control (Sign, Pavement Markings, Flagging, and Traffic Separation)	N/A
11. Detours	$ 2,500.00
12. Landscaping	N/A
13. Mitigation Measures	N/A
14. Other Items (Roadside Development, Guardrail, Fencing, Sidewalks, Curb and Gutter, C.S.S. Items)	N/A
15. Cost of Constructions (Items 3 through 14)	$ 707,500.00
16. Mobilization 10 % of Item 15	$ 70,750.00
17. Construction Engineer and Contingencies 20% of Items 15 and 16	$ 155,650.00
18. Total Construction Cost (15 + 16 + 17)	$ 933,900.00
19. Total Project Cost (1 + 2 + 18)	$ 1,110,775.00

The opinion of most probable cost herein is based on our perception of current conditions at the project location. This estimate reflects our opinion of probable costs at this time and is subject to change as the project design matures. Keller Associates has no control over variances in the cost of labor, materials, equipment, services provided by others, contractor's methods of determining prices, competitive bidding or market conditions, practices or bidding strategies. Keller Associates cannot and does not warrant or guarantee that proposals, bids or actual construction costs will not vary from the costs presented herein.

Key Number	NA	Project Number	Stiff Leg Culvert	Date	Jan-18
Location	Main Street Farmers Coop Canal Bridge, Emmett, ID			District	
Segment Code		Begin Mile Post	End Mile Post	Length in Miles	

1a. Preliminary Engineering (PE) 5% of Line 15	$ 13,264.00
1b. Preliminary Engineering by Consultant (PEC) 20% of line 15	$ 53,056.00
2. Right-of-Way: Number of Parcels _____ Number of Relocations _____	$ -
3. Utility Adjustments: ☐ Work ☐ Materials ☐ By State ☑ By Others	N/A
4. Earthwork	N/A
5. Drainage and Minor Structures	N/A
6. Pavement and Base	N/A
7. Railroad Crossing:	N/A
Grade/Separation Structure	
At-Grade Signals Yes No	
8. Bridges/Grade Separation Structures:	$ 262,780.00
☑ New Structure Length/Width L=50', W=50'	
Location	
☐ Repair/Widening/Rehabilitation Length/Width	
Location	
9. Traffic Items (Delineators, Signing, Channelization, Lighting, and Signals)	N/A
10. Construction Traffic Control (Sign, Pavement Markings, Flagging, and Traffic Separation)	N/A
11. Detours	$ 2,500.00
12. Landscaping	N/A
13. Mitigation Measures	N/A
14. Other Items (Roadside Development, Guardrail, Fencing, Sidewalks, Curb and Gutter, C.S.S. Items)	N/A
15. Cost of Constructions (Items 3 through 14)	$ 265,280.00
16. Mobilization 10 % of Item 15	$ 26,528.00
17. Construction Engineer and Contingencies 20% of Items 15 and 16	$ 58,362.00
18. Total Construction Cost (15 + 16 + 17)	$ 350,170.00
19. Total Project Cost (1 + 2 + 18)	$ 416,490.00

The opinion of most probable cost herein is based on our perception of current conditions at the project location. This estimate reflects our opinion of probable costs at this time and is subject to change as the project design matures. Keller Associates has no control over variances in the cost of labor, materials, equipment, services provided by others, contractor's methods of determining prices, competitive bidding or market conditions, practices or bidding strategies. Keller Associates cannot and does not warrant or guarantee that proposals, bids or actual construction costs will not vary from the costs presented herein.

THIS PAGE INTENTIONALLY LEFT BLANK

Appendix M

State Highway 16
Access Correspondence with ITD

THIS PAGE INTENTIONALLY LEFT BLANK

From: Shona Tonkin <Shona.Tonkin@itd.idaho.gov>
Sent: Thursday, September 28, 2017 2:48 PM
To: Justin Walker; Bruce Evans; Clint Seamons
Cc: Brian Sullivan; Erika Bowen
Subject: RE: SH 16 Access for City Street

Hi Justin,
I researched the area from SH 16 to Airport to see if ITD bought any access along the North and South sides of SH 52. I did not find any deeds that showed we bought access. They do show no buildings within 20 feet of the right of way and no billboards or signs within 100 feet.

If you have any questions just give me a call.

Thanks,

Shona

From: Erika Bowen
Sent: Thursday, September 28, 2017 12:40 PM
To: Justin Walker; Shona Tonkin; Bruce Evans
Cc: Clint Seamons; Brian Sullivan
Subject: RE: SH 16 Access for City Street

Thanks Justin.

I forwarded this to the Project Scoping Manager, Caleb Hood. He's out of town until Monday but is checking emails. Someone will get back to you with coments.

Erika R. Bowen, P.E.
ITD District 3 Traffic Engineer

From: Justin Walker [mailto:jwalker@Kellerassociates.com]
Sent: Wednesday, September 27, 2017 2:22 PM
To: Shona Tonkin; Bruce Evans
Cc: Erika Bowen; Clint Seamons; Brian Sullivan; Justin Walker
Subject: RE: SH 16 Access for City Street

Shona, Erika,

Find below a link to the recent City Transportation plan for your review and comment. We hope it is also useful regarding the proposed Washington Street improvements and that some of the recommended improvements in the transportation plan can be incorporated into the ITD project.

After further review of our emails, we did receive a response from Amy regarding her review of the transportation plan. She stated that ITD had no comments on the Transportation Plan as submitted. Perhaps she was not aware of the access restrictions discussed today. Thanks.

https://www.dropbox.com/sh/1j7qb3zsl5tbwko/AAB73CCXF7gqVJQaEHn9ZIdMa?dl=0

On another note, please email me the Public Records Request Form. Thanks.

Justin Walker, P.E.
Project Manager | **Keller Associates, Inc.**
P 208.288.1992 | C 208.859.2932
131 SW 5th Avenue, Suite A | Meridian | Idaho 83642
jwalker@kellerassociates.com | www.kellerassociates.com

From: Shona Tonkin [mailto:Shona.Tonkin@itd.idaho.gov]
Sent: Tuesday, September 26, 2017 8:13 AM
To: Justin Walker <jwalker@Kellerassociates.com>; Bruce Evans <bevans@cityofemmett.org>
Cc: Erika Bowen <Erika.Bowen@itd.idaho.gov>; Clint Seamons <cseamons@cityofemmett.org>; Brian Sullivan <bsullivan@cityofemmett.org>
Subject: RE: SH 16 Access for City Street

Hi Justin,
ITD has bought the access on the north and south side of SH 16 from Substation Rd to Judo. There is one 40 foot access west of Johns and east of Judo on the north side of SH 16 and there is one 40 foot access remaining for the parcel to the east of Albertsons on the north side of SH 16 and west of the Drainage District #1 ditch. I have attached a Google image so you can tell what areas I am talking about in red. Those are the only available access points from Substation to Judo on the north side. No access points are available except for the current existing points on the south side.

Thanks,

Shona Tonkin
Permits Coordinator – ITD District III
Email: ITDD3Permits@itd.idaho.gov
208-334-8341 Office
208-334-8917 Fax
ITD District 3
P.O. Box 8028

Boise Idaho,83707-2028

Your Safety, Your Mobility,
Your economic opportunity

***CONFIDENTIALITY NOTICE: This e-mail message may contain legally privileged and confidential information exempt or prohibited from disclosure under applicable law. If you are not the intended recipient of this e-mail, please notify this sender immediately and do not deliver, distribute or copy this e-mail, or disclose its contents or take any action in reliance on the information it contains.

From: Justin Walker [mailto:jwalker@Kellerassociates.com]
Sent: Monday, September 25, 2017 1:29 PM
To: Shona Tonkin; Bruce Evans
Cc: Erika Bowen; Clint Seamons; Brian Sullivan; Justin Walker
Subject: RE: SH 16 Access for City Street

Shona,

Thanks for your response. That helps the City as they consider future roadway intersections with Hwy 16/52. Your email references other right of way purchases along these highways. Can you please provide a similar figure showing the location of those as well. This would be very important information so the City does not propose future roadway crossing with SH 16/52 in locations that will not be approved by ITD like the location we are dealing with now.

The City will need to consider frontage roads or other roadway solutions to deal with development in these areas. Thanks.

Justin Walker, P.E.
Project Manager | **Keller Associates, Inc.**
P 208.288.1992 | C 208.859.2932
131 SW 5th Avenue, Suite A | Meridian | Idaho 83642
jwalker@kellerassociates.com | www.kellerassociates.com

From: Shona Tonkin [mailto:Shona.Tonkin@itd.idaho.gov]
Sent: Monday, September 25, 2017 11:33 AM
To: Bruce Evans <bevans@cityofemmett.org>; Justin Walker <jwalker@Kellerassociates.com>
Cc: Erika Bowen <Erika.Bowen@itd.idaho.gov>; Clint Seamons <cseamons@cityofemmett.org>; Brian Sullivan <bsullivan@cityofemmett.org>
Subject: RE: SH 16 Access for City Street

Hi Bruce,
I researched SH 16 and ITD has bought the Right-of-Way in several locations on both sides of the highway.
In reference to Justins question as to where ITD would allow access he will need to give me a location so I can look it up.
As to where the Stations 694-49.34 and 701+23 area is on Google I have added the pic below.

Shona Tonkin
Permits Coordinator – ITD District III
Email: ITDD3Permits@itd.idaho.gov
208-334-8341 Office
208-334-8917 Fax
ITD District 3
P.O. Box 8028
Boise Idaho,83707-2028

Your Safety, Your Mobility,
Your economic opportunity

***CONFIDENTIALITY NOTICE: This e-mail message may contain legally privileged and confidential information exempt or prohibited from disclosure under applicable law. If you are not the intended recipient of this e-mail, please notify this sender immediately and do not deliver, distribute or copy this e-mail, or disclose its contents or take any action in reliance on the information it contains.

From: Bruce Evans [mailto:bevans@cityofemmett.org]
Sent: Friday, September 22, 2017 8:21 AM
To: Justin Walker
Cc: Shona Tonkin; Erika Bowen; Clint Seamons; Brian Sullivan
Subject: Re: SH 16 Access for City Street

Justin:

Have you heard from Shona regarding to your questions?

Bruce

Sent from my iPhone

On Sep 21, 2017, at 12:36 PM, Justin Walker <jwalker@Kellerassociates.com> wrote:

> Shona,
>
> Thanks for the information. Am I understanding correctly that ITD will not allow any roadway or driveway access onto Highway 16 between Stations 694-49.34 and 701+23? Is that the only section of Highway 16 that ITD purchased the access rights and would restrict access? The map/drawing is very difficult to understand where it points are in relation to the real world without a north arrow and any cross-streets. Can you show where that stationing is on a Google Earth image? That would be very helpful. Thanks.
>
> **Justin Walker, P.E.**
> **Project Manager** | **Keller Associates, Inc.**
> P 208.288.1992 | C 208.859.2932
> 131 SW 5th Avenue, Suite A | Meridian | Idaho 83642
> jwalker@kellerassociates.com | www.kellerassociates.com
>
> ---
>
> **From:** Shona Tonkin [mailto:Shona.Tonkin@itd.idaho.gov]
> **Sent:** Wednesday, September 20, 2017 12:42 PM
> **To:** Bruce Evans <bevans@cityofemmett.org>
> **Cc:** Erika Bowen <Erika.Bowen@itd.idaho.gov>; Clint Seamons <cseamons@cityofemmett.org>; Brian Sullivan <bsullivan@cityofemmett.org>; Justin Walker <jwalker@Kellerassociates.com>
> **Subject:** Re: SH 16 Access for City Street
>
> Hi Bruce,
>
> In regards to your request for a possible city street connection to SH 16 from 12th Street, I did some research and I found out that ITD has purchased the right of way adjacent to SH 16 on both the north and south side at the location you are wanting to access. Please see the attached documentation.
>
> History:
>
> In 1965 ITD bought access rights from Mr. Werle (see attached documents) on both the north and south sides of SH 16 between stations 694+49.34 to 701+23 and allowed for one 20' access on the southerly side at station 700+40.
>
> In 2003 ITD bought the access rights on the southerly side of SH 16 along with more right-of-way in project "SH 16 Sub-Station Road ST-3330(606)".

In 2003 ITD completed an Environmental Assessment for the SH 16 Corridor plan. ITD worked with the City of Emmett and considered their master roadway plan that was current at the time. This Environmental Assessment shows no connection to SH 16 and city street access is available or could be developed.

To preserve the mobility on SH 16 and in accordance with future plans for the separated highway configuration; ITD is unable to allow access to SH 16.

If you would like to cancel the meeting on the 27th please let me know.

If you have any questions, please feel free to contact me.

Thank you,

Shona Tonkin
Permits Coordinator – ITD District III
Email: ITDD3Permits@itd.idaho.gov
208-334-8341 Office
208-334-8917 Fax
ITD District 3
P.O. Box 8028
Boise Idaho,83707-2028

<image001.png>
Your Safety, Your Mobility,
Your economic opportunity

***CONFIDENTIALITY NOTICE: This e-mail message may contain legally privileged and confidential information exempt or prohibited from disclosure under applicable law. If you are not the intended recipient of this e-mail, please notify this sender immediately and do not deliver, distribute or copy this e-mail, or disclose its contents or take any action in reliance on the information it contains.